MAGELLAN™

All-In-One Wireless Security System V1.0

Model #: MG-6060

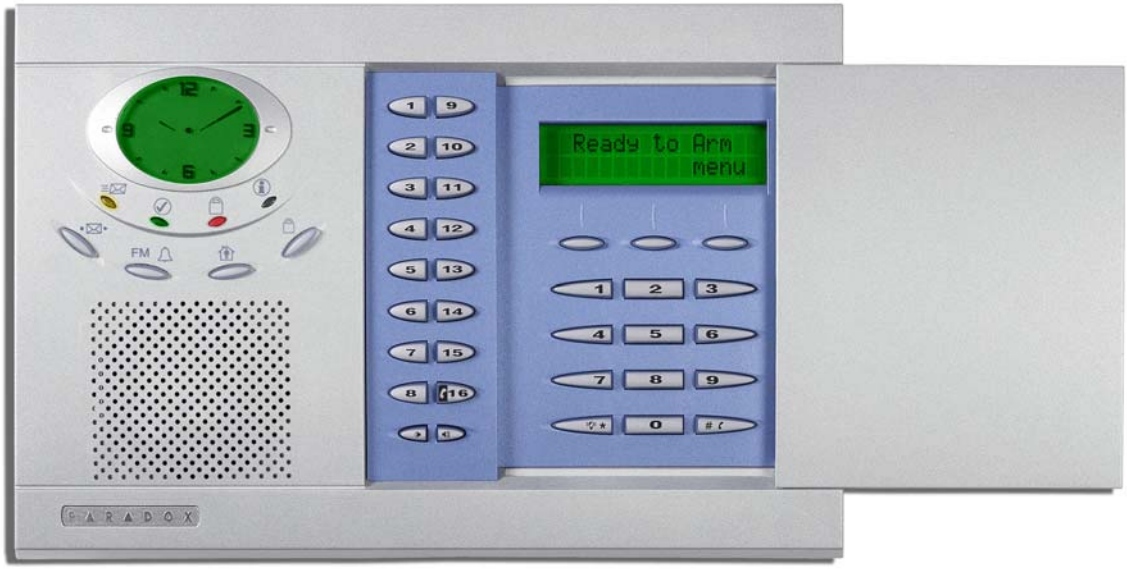

Reference and Installation Manual

PARADOX®
SECURITY SYSTEMS

Table of Contents

Introduction 3
- About Magellan and this Manual 3
- Conventions 3
- Specifications 3

Quick Setup 4

Installation 6
- AC Power 6
- Backup Battery Pack 6
- Telephone Line Connections 6
- Programmable Outputs (PGMs) 7
- Hardwire Zone Connections 8
- WinLoad Connection 8
- UIP-256 Universal In-Field Programmer Connection 8
- X10 Transmitter Connection 9
- Connecting a Paradox Memory Key (PMC-3) 9
- Location and Mounting 9
- Connecting the Radio Antenna 10

Programming Methods 11
- WinLoad Installer Upload/Download Software 11
- Programming Using the Built-in Keypad 11
- Programming Using a Paradox Memory Key 11

User Codes 12
- User Code Length 12
- Installer Code 12
- Maintenance Code 12
- System Master Code 12
- Duress Code 12

Zone Programming 13
- Zone Programming Overview 13
- Zone Definitions 13
- Zone Options 15
- Zones 15 and 16 become Hardwire Zones 16
- EOL (End-Of-Line) Zones 16

Wireless Programming 17
- Assigning Wireless Zone Transmitters 17
- Assigning Wireless Doorbells to the Console 17
- Deleting Assigned Wireless Transmitters 17
- Viewing Wireless Transmitter Signal Strength 17
- Assigning Remote Controls 18
- Programming the Remote Control's Buttons 18

Arming and Disarming 21
- Regular Arming Switches to Stay Arming 21
- Regular Arming Switches to Force Arming 21
- Stay Arming Switches to Force Arming 21
- Timed Auto-Arming 21
- No Movement Auto-Arming 21
- Auto-Arming Options 21
- One-Touch Arming 22
- Exit Delay 22
- Bell Squawk on Arm/Disarm with Remote Control 22
- No Exit Delay when Arming with Remote Control. 22
- Exit Delay Termination 22
- Follow Zone Switches to Entry Delay 2 22
- Closing Delinquency Timer 22
- Stay Arm Siren Delay 22

Alarm Options 23
- Bell Cut-off Timer 23
- Wireless Transmitter Supervision Options 23
- Check-in Supervision Options 23
- Tamper Recognition Options 23
- Panic Alarms 24

Reporting and Dialer Settings 25
- Report Codes 25
- Console Telephone Numbers 26
- Console Account Number 28
- Reporting Formats 28
- Event Call Direction 28
- Delay Between Dialing Attempts 29
- Alternate Dial Option 29
- Force Dial Option 29
- Dialing Method 29
- Pulse Ratio 29
- Switch to Pulse Dialing on 5th Attempt 29
- Telephone Line Monitoring (TLM) 29
- Recent Close Delay 30
- Auto-Test Report 30
- Power Failure Report Delay 30
- Disarm Reporting Options 30
- Zone Restore Report Options 30
- RF Interference Detection 30

Programmable Outputs 31
- PGM Activation Event 31
- PGM Deactivation Event 31
- PGM Delay 31
- PGM Normal State 31
- PGM X10 Option 31

System Settings 32
- Software Reset 32
- Installer Lock 32
- Console Tamper Supervision 32
- Console Audible Trouble Warning 32
- FM Tuner Option 32
- Daylight Savings Time 32
- AC Power Failure Warning 32
- The Trouble Display 32

WinLoad Software Settings 34
Panel Answer Options 34
Panel Identifier..... 34
PC Password..... 34
PC Telephone Number..... 34
Call Back Feature 34

Appendix 1: Automatic Report Code List.. 35

Appendix 2: Ademco Contact ID Report Code List 37

Index 40

Introduction

About Magellan and this Manual

Magellan is designed for fast and easy installation. Simply remove it from the box, mount the console and wireless transmitters, apply power, perform some basic programming and Magellan is ready to protect your home.

Some of Magellan's features can be programmed through a quick Installer menu (menu programming) or through section programming. Use the quick setup chapter (see page 4) to install the Magellan console quickly with the basic programming required for a standard security application. All other chapters (pages 6 to 34) are for advanced section programming. These other chapters provide more in-depth and precise information if more advanced programming is required.

We recommend that you read this entire manual before you begin your installation.

Conventions

This symbol designates a reference to another section, manual or guide.

This symbol designates either a warning or important information.

This symbol designates a reminder or suggestion.

[DATA] = - Text shown in this manner designates data or programming information that is entered through the console's keypad.

- Text shown in this manner can also designate a specific key that has to be pressed.

Specifications

Power input:	AC*: 9Vac, 1A transformer or 16.5Vac, 1A transformer or DC: 12Vdc to 18Vdc (1A) power supply
Current consumption:	1A (max.)
Backup Battery:	7.2Vdc, 1.8Ah NiMH rechargeable battery pack (order # 0780100178)
PGMs:	Two N.O. solid-state relays (not polarized) Internal resistance - 16Ω (max.) Max. current consumption - 100mA

**** It is recommended that you use a 9Vac, 1A transformer to power the Magellan console. The console will generate less heat when connected to a 9Vac transformer than when connected to a 16.5Vac transformer.***

Quick Setup

Follow these steps to quickly set up Magellan with the required settings for a basic security installation.

1. Getting Started

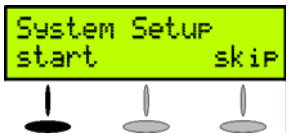

1. After powering up for the first time, press **[START]** to access the Installer menu.

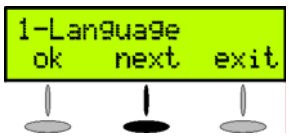

2. The first menu option will appear. Press **[NEXT]** to go to the "User Profile" menu.

2. User Programming

1. From the "User Profile" menu, press **[OK]**.

2. Select which user you wish to add by pressing **[NEXT]**. When the desired user appears, press **[OK]** and follow the menus to set:
   - **Access code**
   - **User label**
   - **Remote control**

   When you are done the next menu option will appear (see Monitoring Station Reporting below).

For more in-depth programming of the remote controls, see Programming the Remote Control's Buttons on page 18.

3. Monitoring Station Reporting

1. From the "Communicator" menu, press **[OK]**.

2. Press **[OK]** and follow the menus to set:
   - **Telephone numbers**
   - **Account Number**
   - **Report Format**

   When you are done the next menu option will appear. Press **[NEXT]** until you see the "Zone Profile" menu or press the **[6]** key to immediately access the "Zone Profile" menu.

For more in-depth programming of the console's communication features, see Reporting and Dialer Settings on page 25.

4. Adding and Programming Zones

1. From the "Zone Profile" menu, press **[OK]**.

2. Select which zone you wish to add by pressing **[NEXT]** and press **[OK]** when the desired zone number appears.

3. Press the tamper switch on the transmitter you wish to assign to the selected zone. Follow the menus to set:
   - **Zone Label**
   - **Zone Type**
   - **Other Zones**

When you are done the next menu option will appear. Press [NEXT] until you see the "System Test" menu or press the **[5]** key to immediately access the "System Test" menu.

For more in-depth programming of the console's zones, see Zone Programming on page 13 and Wireless Programming on page 17.

5. Testing the Magellan System

1. From the "System Test" menu, press **[OK]**.

2. Select which test you wish to perform by pressing **[NEXT]** and press **[OK]** when the desired test appears. The following tests can be performed:
   - **Zone tests**
   - **Remote control tests**
   - **Reporting tests**
   - **Hardware tests**

WARNING! When testing the hardware, the speaker and sirens will also be tested. Avoid close proximity to the Magellan console when performing the hardware test to avoid any damage to your hearing.

When you are done the next menu option will appear. Press [NEXT] until you see the “Passwords” menu or press the **[8]** key to immediately access the “Passwords” menu.

6. Passwords

1. From the “Passwords” menu, press **[OK]**.

2. Select which password(s) or code(s) you wish to program by pressing **[NEXT]** and press **[OK]** when the desired password appears. The following passwords can be programmed:
   - **Installer code**
   - **Maintenance code**
   - **Panel ID**
   - **PC Password**

When you are done the next menu option will appear. Press [EXIT].

For more in-depth programming of the console’s passwords, see User Codes on page 12 and WinLoad Software Settings on page 34.

7. Time and Date

1. Press the **[MENU]** key.

2. Press **[NEXT]** until you reach the “Time and Date” menu and press **[OK]** or press the **[3]** key to access the “Time and Date” menu.

3. Select the time format (12Hr-clock or 24Hr-clock) and then program the time. Press **[OK]** when done.Program the date by entering the 4-digit year first, followed by the 2-digit month and then the 2-digit day. Press **[OK]** when done.

Deleting Zones

1. From the “Zone Profile” menu, press **[OK]**.

2. Select which zone you wish to delete by pressing **[NEXT]** and press **[OK]** when the desired zone number appears.

3. Press **[YES]**.

4. Press **[YES]**. To delete another zone, press **[YES]** and then repeat steps 2 to 4.

When you are done the next menu option will appear. Press **[NEXT]** until you see the “System Test” menu or press the **[5]** key to immediately access the “System Test” menu.

For more in-depth programming of the console’s zones, see Zone Programming on page 13 and Wireless Programming on page 17.

Installation

AC Power

Magellan requires a 9Vac (1A) or 16.5Vac (1A) transformer (not included) to supply power to the console. Connect the transformer to the **AC** terminals as shown in Figure 1 on page 6.

Magellan can also be powered through a DC power supply. Connect a 12Vdc to 18Vdc (1A) power supply to the ***AC*** *terminals to power the console.*

Do not use any switch-controlled outlets to power the transformer.

Figure 1: Connecting the Transformer

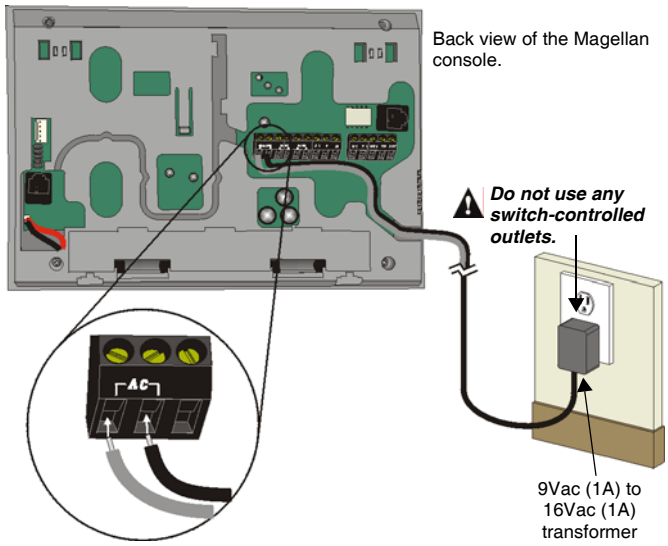

Backup Battery Pack

Magellan uses a backup battery pack to provide power during a power loss. A 7.2Vdc 1.8Ah NiMH (Nickel Metal Hydride) rechargeable battery pack is included with the Magellan console. Connect the battery pack as shown in Figure 2 on page 6.

Connect the backup battery pack after applying AC power.

Figure 2: Connecting the Backup Battery

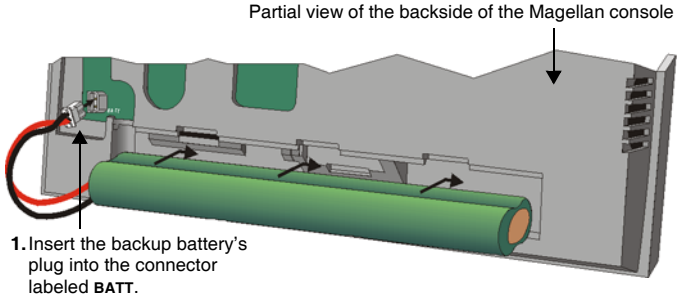

Figure 2: Connecting the Backup Battery (cont'd)

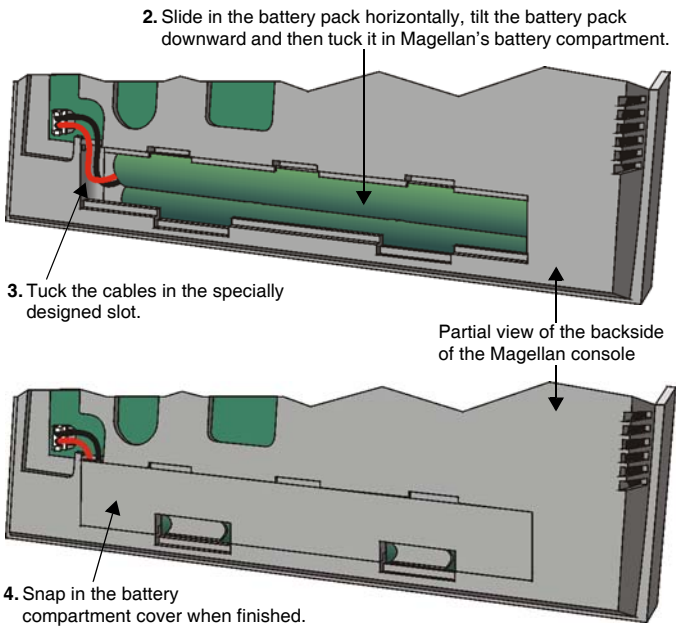

Telephone Line Connections

The Magellan console can be connected to a telephone line by connecting the telephone company's wires directly to Magellan's dialer or by connecting a standard 4-pin RJ-11 cable between the **LINE** plug of the console to a standard telephone wall jack.

Direct Connect

Connect the telephone line through a RJ31X jack as shown in Figure 3 on page 6.

Figure 3: Telephone Line Direct Connect

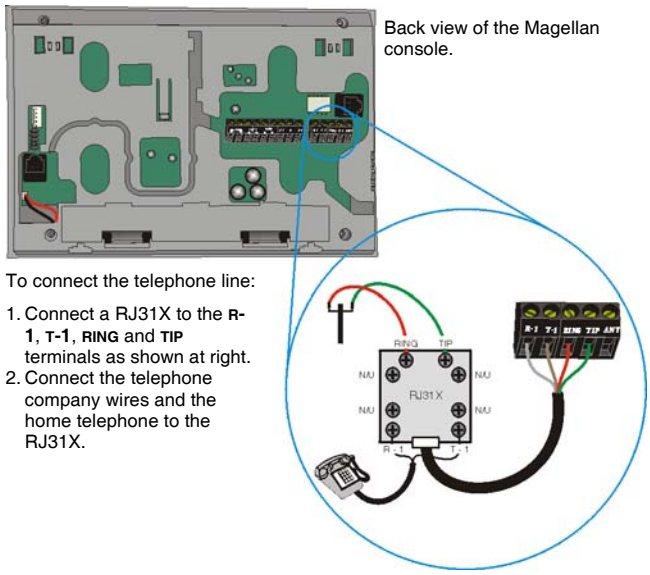

For UL compliant installations, the Magellan console must be able to seize the telephone line and place a call in an emergency situation. It must be able to do this even if other equipment (telephones, answering machines, computer modems, etc.) already has the line in use. To do so, the Magellan console must be connected to a properly installed RJ31X jack that is in series with and ahead of all other equipment attached to the same telephone line. Proper installation is depicted in the diagram below. If you have any questions concerning these instructions, you should consult your telephone company about installing the RJ31X jack and the Magellan console for you.

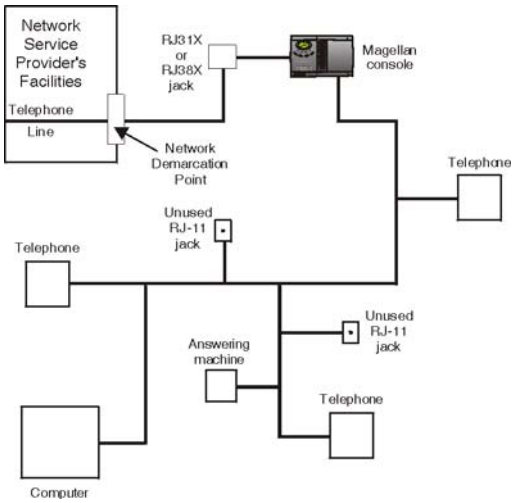

Line Plug Connect

The Magellan console can also be connected to a telephone line via its on-board **LINE** plug. See Figure 4 on page 7 for more information on connecting the telephone line using this method.

When connecting via the LINE plug, if the telephone line is shared and it is busy (i.e. someone is talking on the telephone) the console will be unable to communicate with the Monitoring Station. It is recommended that the Direct Connect method (see page 6) be used to connect the telephone line.

Figure 4: Line Plug Connection

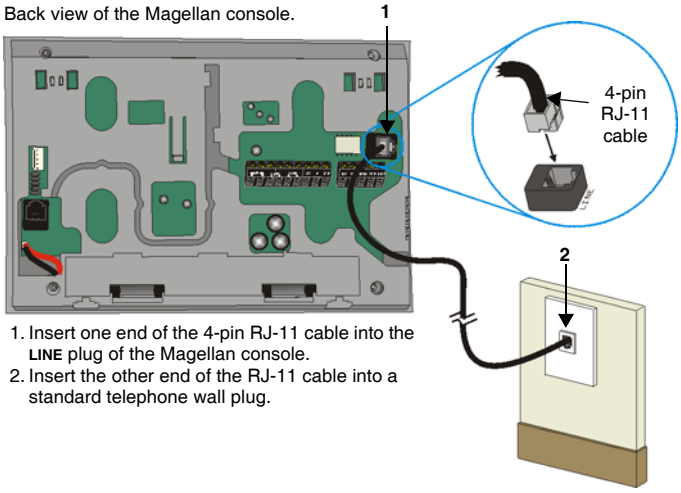

1. Insert one end of the 4-pin RJ-11 cable into the **LINE** plug of the Magellan console.
2. Insert the other end of the RJ-11 cable into a standard telephone wall plug.

Programmable Outputs (PGMs)

Magellan comes equipped with two 100mA solid-state PGM outputs. When a specific event occurs in the system, a PGM can be programmed to activate lights, garage door openers, etc. See Programmable Outputs on page 31 for more information on programming PGMs.

Connect Magellan's PGM outputs as shown in Method 1 in Figure 5 on page 7. Since Magellan does not come with a power supply, an external power supply must be employed to power the circuit. The PGM outputs can be either Normally Open (N.O.) or Normally Closed (N.C.) as detailed in PGM Normal State on page 31.

If the current draw on the PGMs is to exceed 100mA, we recommend using an external relay as shown in Method 2 in Figure 5 on page 7.

*Using Method 2, connect the device to the output terminal of the external relay that matches the normal state of Magellan's PGM output. For example, if PGM1's normal state is Normally Open (N.O.), connect the device to the **N.O.** terminal of the external relay.*

Figure 5: PGM Connections

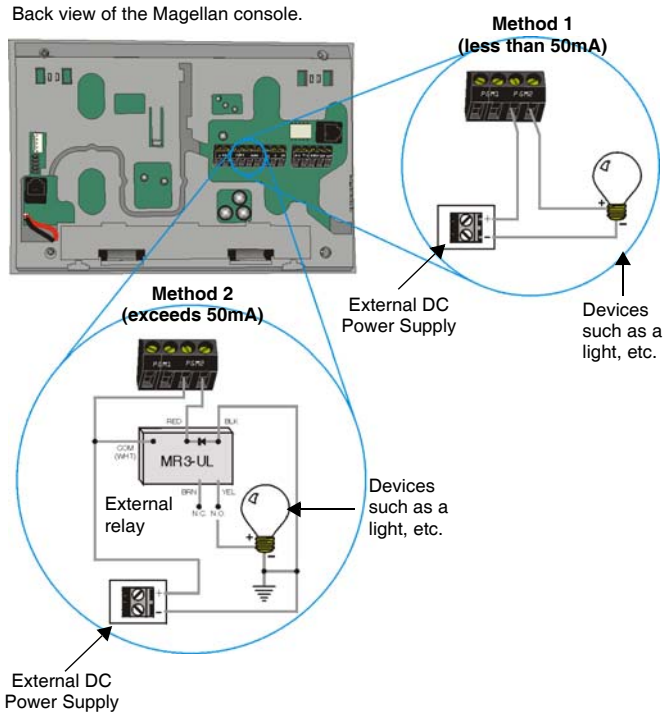

Hardwire Zone Connections

Magellan comes with two on-board hardwire zones. You can connect hardwire detection devices such as door contacts to Magellan's zone terminals. Connect the detection devices as shown in Figure 6 on page 8. Please note the following:

- Section [095] options [1] and [2] must be enabled in order to use the two on-board hardwire zones. See Zones 15 and 16 Become Hardwire Zones on page 16 for more information.
- After connecting the detection devices, the zones must be defined. See Zone Programming on page 13 for more information.
- The hardwire zones follow the console's EOL and tamper definitions.

Though any hardwire detection device can be connected to Magellan's on-board hardwire zone inputs, it is recommended that only devices that do not require a power source (i.e., standard door contacts) be connected. Since Magellan has no power supply, an external power supply would have to be connected in order to power hardwire detection devices that do require a power source.

Figure 6: Hardwire Zone Connections

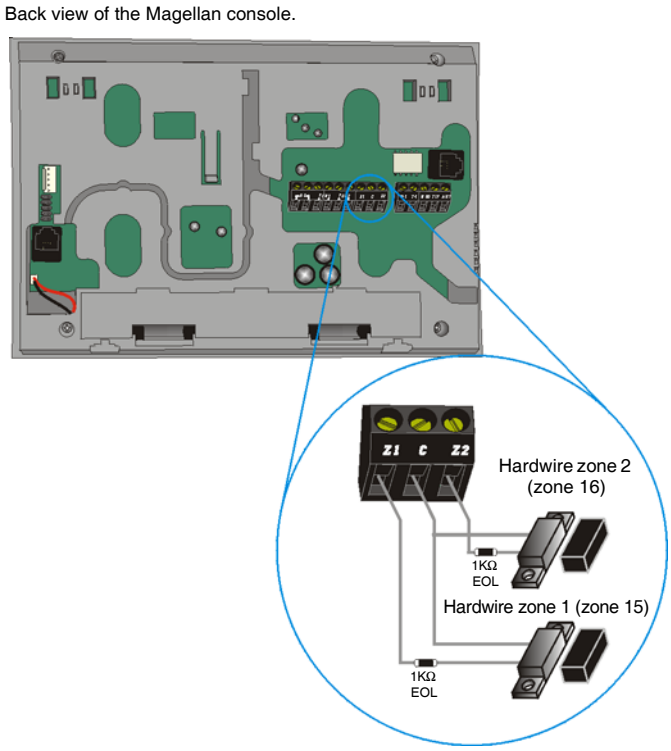

WinLoad Connection

The Magellan console can be programmed and monitored through the WinLoad Installer Upload/Download Software for Windows®. WinLoad allows for remote or on-site uploading and downloading using most standard modems. It also allows for advanced printing of reports and supports several languages simultaneously. Connect Magellan to a computer containing the WinLoad software as shown in Figure 7 on page 8.

Refer to the *WinLoad's Online Help* for more information on WinLoad.

Figure 7: On-site Connection

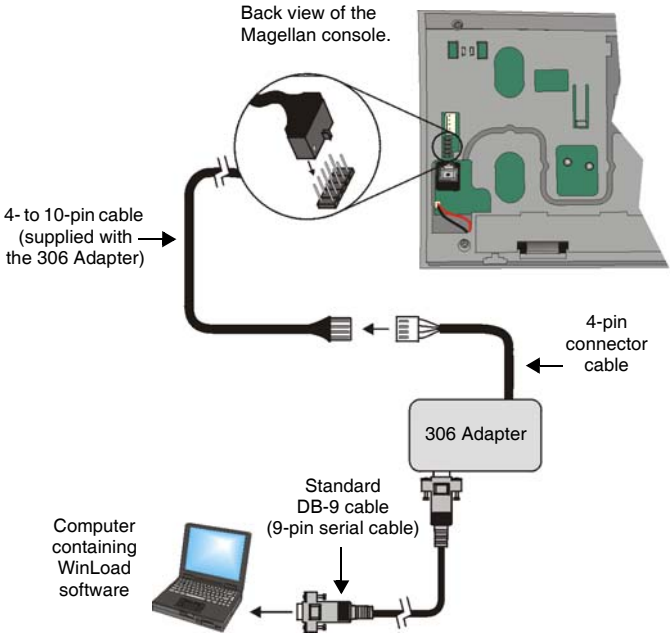

UIP-256 Universal In-Field Programmer Connection

Magellan's firmware can be upgraded locally using the UIP-256 Universal In-Field Programmer. The UIP-256 includes proprietary PC software, cables to interconnect Magellan and a PC, as well as two 9V batteries. Connect the UIP-256 as shown in Figure 8 on page 8.

Refer to the *Universal In-Field Programmer (UIP-256) Instructions* for more information.

Figure 8: Connecting the UIP-256

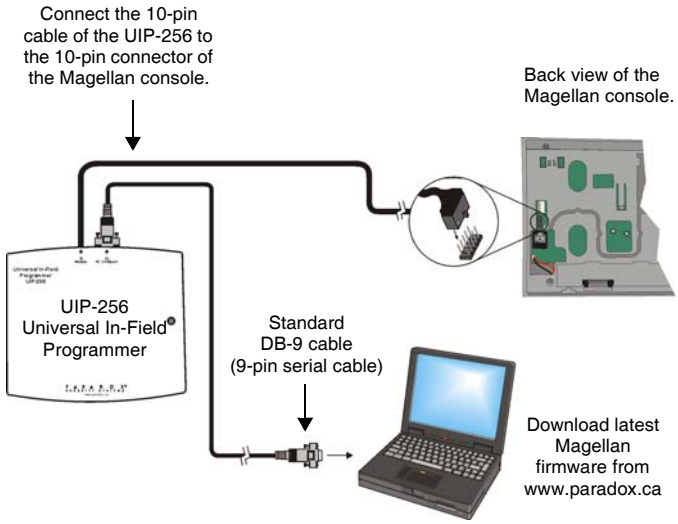

X10 Transmitter Connection

Magellan supports the X10 communication protocol. X10 is a communication protocol for remote control of electrical devices such as lamps and appliances. Communication is accomplished through standard household electrical wiring using X10 transmitters and receivers. Configure Magellan, with the use of an X10 transmitter, to automate a home. Connect the X10 transmitter as shown in Figure 9 on page 9.

Refer to the *Magellan X10 Instructions* on our website, www.paradox.ca, for information on using and configuring Magellan's X10 feature.

Figure 9: Connecting the X10 Transmitter

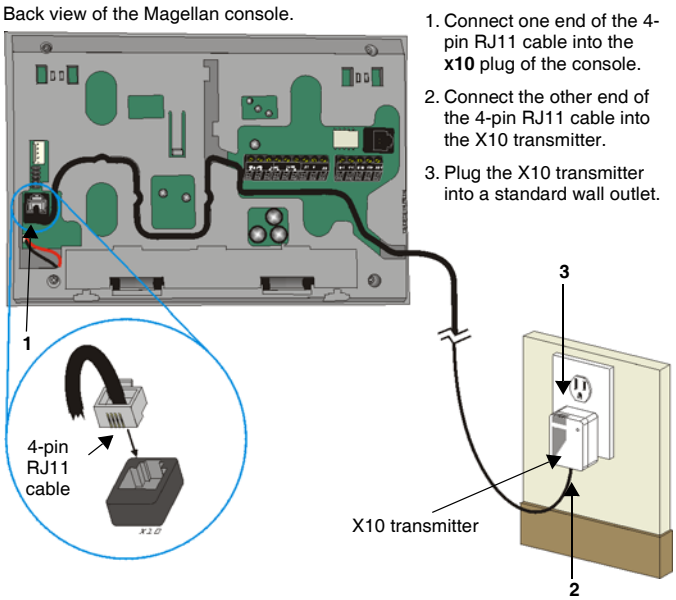

Connecting a Paradox Memory Key (PMC-3)

When using a Paradox Memory Key with a Magellan console, remove power (both AC and battery power) and connect the memory key to the 5-pin connector on the back of the Magellan console as shown in Figure 10 on page 9. Once connected, re-apply power to the console. For more information, see Programming Using a Paradox Memory Key on page 11.

Figure 10: Connecting a Paradox Memory Key (PMC-3)

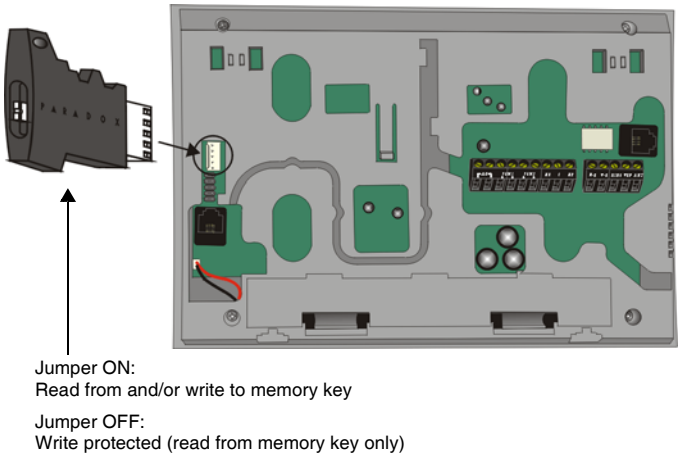

Location and Mounting

Location

The locations of Magellan and its wireless transmitters affect the overall performance of the wireless system. To ensure the best signal reception, the following list of location criteria should be respected whenever possible:

- Select an installation site that is free of obstacles that reflect and absorb radio frequency (RF) signals, as well as interference that may distort signals. Avoid installation near or in the path of strong RF fields (i.e., neon lights, computers), and on or near metal objects, circuit breaker boxes, air conditioners and heater ducts since they may cause interference and reduce the console's sensitivity.
- Select a site that is not susceptible to drastic temperature changes.
- Mount the Magellan console as central as possible to the proposed placement of the wireless transmitters.
- Mount the Magellan console as high as possible.
- Avoid installing Magellan in the basement as the range of the console is reduced when installed below ground level. However, if it is absolutely necessary to install the console in the basement, install the console as high as possible.
- Install the Magellan console on a wall allowing at least 5cm (2") around the console to permit adequate ventilation and heat dissipation.

The Wall Plate

Magellan uses a plastic wall plate to stay mounted on a wall. The wall plate is also used for tabletop mounting to cover the back of the console as well as keep any wires within their respective wire slots. After choosing an appropriate location (see Location on page 9), mount the wall plate onto the Magellan console with two screws as described in Mounting Magellan on the Wall on page 10 or Tabletop Mounting on page 10.

Figure 11: Wall Plate

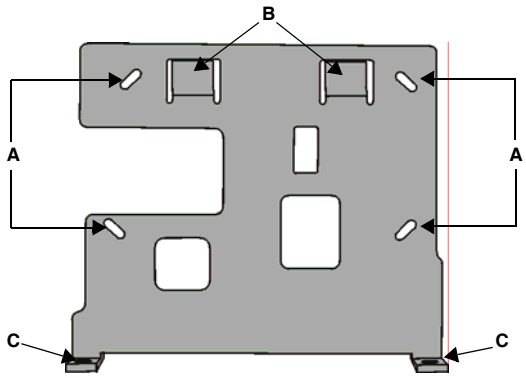

Figure 12: Mounting Magellan onto the Wall Plate

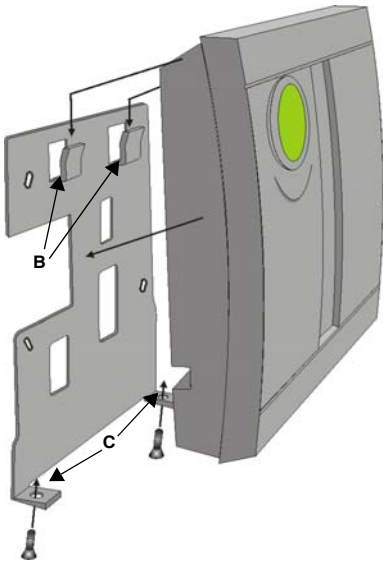

Figure 13: Magellan's Back Plate

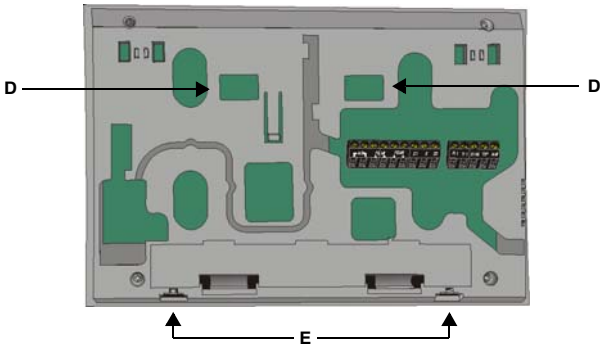

Mounting Magellan on the Wall

Magellan can be mounted on a wall by first securing the wall plate (see The Wall Plate on page 9) to the wall and then mounting the Magellan console on the secured wall plate as shown in Figure 12 on page 10 and Figure 13 on page 10. To do so:

1. Place the wall plate on the desired spot of the wall.
2. Drill and insert screws into holes labeled **A** as shown in Figure 11 on page 9.
3. Place the console back plate flush against the mounted wall plate.
4. Slide the Magellan's open slots labeled **D** (see Figure 13 on page 10) onto the wall plate's tabs labeled **B** (see Figure 12 on page 10).
5. Gently apply downward pressure to insert the wall plate's tabs into Magellan's open slots.
6. Insert two screws through the wall plate's screw holes labeled **C** and into holes labeled **E** (see Figure 12 on page 10 and Figure 13 on page 10) in the Magellan back plate. This will secure the console to the wall.

Tabletop Mounting

Magellan can also be mounted on a tabletop. This is a useful convenience that allows Magellan to be situated on a nightstand, desk, kitchen counter, etc. Included with Magellan are two plastic feet as well as two rubber stops. The plastic feet raise the Magellan console to a slight angle for easy viewing while the rubber stops prevent the console from sliding when Magellan is being used. To do so:

1. Place the console back plate flush against the wall plate.
2. Slide the Magellan's open slots labeled **D** (see Figure 13 on page 10) onto the wall plate's tabs labeled **B** (see Figure 12 on page 10).
3. Gently apply downward pressure to insert the wall plate's tabs into Magellan's open slots.
4. Insert two screws through the wall plate's screw holes labeled **C** and into holes labeled **E** (see Figure 13 on page 10) in the Magellan back plate.
5. Attach the plastic feet and rubber stops as shown in Figure 14 on page 10.

Figure 14: Mounting Magellan on a Tabletop

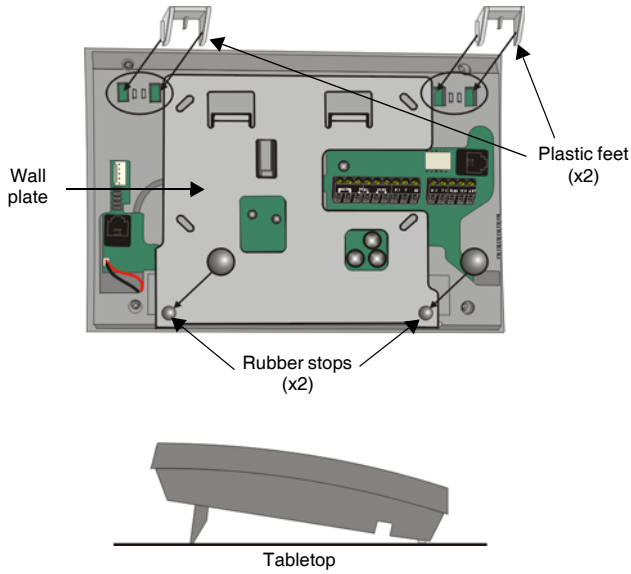

Tabletop mounting may not be an approved installation method by local regulations. It is recommended that the local regulations be verified prior to installing the Magellan console using this method.

Connecting the Radio Antenna

If the radio's reception is not very good, connect the supplied radio antenna to the **ANT** terminal on the back of the Magellan console as shown in Figure 15 on page 10. Move the antenna around until the spot with the best reception is found.

Figure 15: Connecting the Radio Antenna

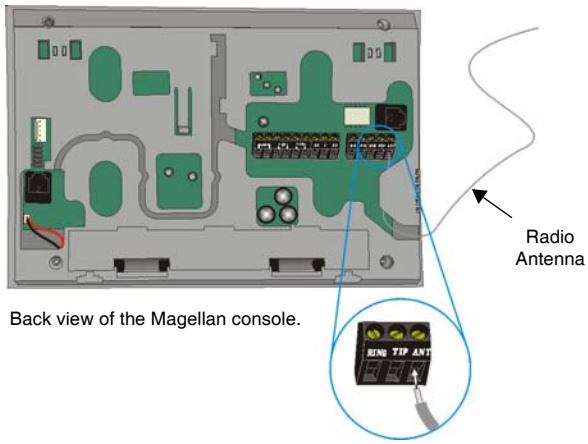

Programming Methods

WinLoad Installer Upload/Download Software

Program the Magellan console remotely or on-site using the WinLoad Installer Upload/Download Software for Windows®. For more information, contact your local Paradox Distributor or visit our Web site at www.paradox.ca. If you are using the WinLoad software, you must program the features explained on page 34.

Please refer to *WinLoad's Online Help* for more information on using WinLoad.

Programming Using the Built-in Keypad

Use the built-in keypad to access Magellan's programming mode.

Use the supplied *Magellan Programming Guide* to keep track of which sections were programmed and how.

To access programming mode:

1. Press and hold the **[0]** key.
2. Enter your **[INSTALLER CODE]** or **[MAINTENANCE CODE]**.
3. Enter the 3-digit **[SECTION]** you wish to program.
4. Enter the required **[DATA]**.

There are two methods that can be used to enter data when in programming mode: Single Digit Data Entry and Feature Select Programming.

Single Digit Data Entry Method

After entering programming mode, some sections will require that you enter decimal values from 000 to 255. Other sections will require that you enter hexadecimal values from 0 to F. The required data will be clearly indicated in this manual as well as in the Magellan Programming Guide. When entering the final digit in a section, Magellan will automatically save and advance to the next section. Table 1 (see below) shows the keys and their equivalent decimal and/or hexadecimal value.

Table 1: Decimal and Hexadecimal Values

Key	Value	Key	Value
[1]	1	**[9]**	9
[2]	2	**[0]**	0 (decimal) Space (Hexadecimal)
[3]	3	**[1]** CK*	A (Hexadecimal only)
[4]	4	**[2]** CK*	B (Hexadecimal only)
[5]	5	**[3]** CK*	C (Hexadecimal only)
[6]	6	**[4]** CK*	D (Hexadecimal only)
[7]	7	**[5]** CK*	E (Hexadecimal only)
[8]	8	**[6]** CK*	F (Hexadecimal only)

* CK = Center keypad

Feature Select Programming Method

After entering certain sections, eight options will be displayed whereby each option from **[1]** to **[8]** represents a specific feature or option. To manipulate the options:

- Press the key corresponding to the desired option and the option number will appear in the LCD display. This means the option is ON. Press the key again to remove the digit from the LCD display, thereby, turning OFF the option.
- Press the **[*]** key to set all eight options to OFF. Press the keys until the current section's options are set. When the options are set, press the **[#]** key to save and advance to the next section.
- Press the **[*]** key twice to exit without changing any data.

Programming Using a Paradox Memory Key

The Paradox Memory Keys (PMC-3) are very useful when multiple Magellan consoles are to be programmed identically.

Rather then programming each console by entering its programming mode and then scrolling through programming sections, use a memory key to program each console. The programming of a console with a memory key takes approximately three seconds.

There are two actions that can be performed with a memory key.

Download Data to *Destination* Console

To download the data of a memory key into a console:

1. Remove power from the Magellan console (AC and battery) and connect the memory key to the 5-pin connector on the left side of the back of the console (see Figure 10 on page 9).
2. Re-apply both AC and battery power to the console.
3. Press the **[OK]** key and Magellan will begin downloading the data from the memory key.

Copy Data to Memory Key from *Source* Console

To copy the contents of a console into the memory key.

1. Remove power from the Magellan console (AC and battery) and connect the memory key to the 5-pin connector on the left side of the back of the console (see Figure 10 on page 9).
2. Re-apply both AC and battery power to the console.
3. Press the **[NEXT]** key and then the **[OK]** key. Magellan will begin copying its data into the memory key.

The Installer code of the Magellan console used to download data to the memory key must be the same Installer code programmed in the Magellan console that is to download the contents from the same memory key. If the Installer codes do not match, the contents of the memory key cannot be downloaded into the receiving console.

Example: The contents of the Magellan console A will be copied into memory key B. The Installer code for console A is 111111. In order to download the contents of memory key B into the Magellan console C, the Installer code programmed in console C must also be 111111.

User Codes

A person must be assigned to a User code in order to have access to Magellan. A User code defines the extent of a user's access to the system and consists of a code # (PIN) and user options. Magellan supports one Installer code, one Maintenance code and up to 16 User codes (one System Master code and 15 User codes).

Installer Code	Used to program all console settings except User codes and remote controls.
Maintenance Code	Identical to the Installer code except that the code cannot program dialer options or perform a software reset.
System Master Code User Code 001	Provides access to the following Magellan user features: language, voice and utility reporting, delays and tones, zone labels, system tests. Arm and disarm using any method as well as program User codes.
15 User Codes User Codes 002 to 016	Can arm and disarm the system.

User Code Length

Section [090]: Option [1]
Option [1] OFF = 6-digit User codes
Option [1] ON = 4-digit User codes (default)

All User codes can be set to lengths of either 4 or 6 digits. When the 4-digit option is selected, entering a 4-digit code will allow access. Using the 6-digit option, entering 6 digits is required to allow access.

If the User code length is changed from 4 digits to 6 digits when User codes have already been programmed, the console will automatically add the last 2 digits by using the first 2 digits. For example, if the Access code is 1234 and you switch to 6 digits, the code will become 123412. Be sure to verify the Access codes after switching from 4-digit to 6-digit Access codes. When switching from 6 digits to 4 digits, the console will simply remove the final 2 digits of the Access code. For example, 123456 will become 1234.

Installer Code

Section [181]; Default = **000000**

The Installer code is used to enter the console's programming mode (see Programming Using the Built-in Keypad on page 11), which allows you to program all the features, options and commands of the Magellan console. The Installer code can be 4 or 6 digits in length (see User Code Length on page 12) where each digit can be any value from 0 to 9. The Installer code cannot be used to program any User code.

To change the Installer code:

1. Access the installer programming mode (see page 11).
2. Enter section [181].
3. Enter a new **[4- OR 6-DIGIT INSTALLER CODE]**.

OR

1. Press **[MENU]** + **[4]** + **[INSTALLER CODE]** + **[8]** + **[NEW CODE]**.

Maintenance Code

Section [182]; Default = **111111**

The Maintenance code is similar to the Installer code. It can be used to enter the console's programming mode (see Programming Using the Built-in Keypad on page 11), which allows you to program all features, options and commands **except** for the console's communication settings (sections [108] to [112] and [180] to [182]) as well as any User code. The Maintenance code can be 4 or 6 digits in length (see User Code Length on page 12). Each digit can be any value from 0 to 9.

To change the Maintenance code:

1. Access the installer programming mode (see page 11).
2. Enter section [182].
3. Enter a new **[4- OR 6-DIGIT MAINTENANCE CODE]**.

OR

1. Press **[MENU]** + **[4]** + **[INSTALLER CODE]** + **[8]** + **[NEW CODE]**.

System Master Code

With the System Master code a user can use any arming method and can program any user's (from 1 to 16) Access code. The System Master code can be 4 or 6 digits in length (see User Code Length on page 12), where each digit can be any digit from 0 to 9. The System Master code cannot be changed by the Installer or Maintenance code, but it can be reset to default.

Lock System Master Code

Section [090]: Option [3]

Option [3] OFF = System Master code unlocked (default)
Option [3] ON = System Master code locked

With section [090] option [3] enabled, the System Master code can only be changed or deleted through WinLoad or a power down reset.

Reset System Master Code

Section [200]

Enter section [200] to reset the System Master code to default (1234/123456).

Make sure that the Lock System Master Code feature (section [090] option [3]) is disabled.

Duress Code

Section [090]: Option [4]
Option [4] OFF = Duress code disabled (default)
Option [4] ON = User code 016 becomes a Duress code

With this feature enabled, User code 016 becomes a Duress code. When forced to arm or disarm their system, users can enter a Duress code (User code 016) to arm or disarm the system which can immediately transmit a silent alert to the Monitoring Station, transmitting the Duress report code programmed in section [140] (see page 26).

Zone Programming

Magellan supports up to 16 wireless zones whereby each zone can be configured with a different zone definition and option. Each zone can also have a voice label recorded for it. Magellan's zones can be programmed using section programming or through the Installer menu.

See Quick Setup on page 4 for more information on zone programming using the Installer menu.

Zone Programming Overview

After assigning and setting up your wireless transmitters, define the associated zone's parameters. The zone parameters define the type of zone and how the control panel will react when an alarm condition occurs on that zone. These zone parameters are programmed into one section as detailed in Figure 16 on page 13.

Figure 16: Magellan Zone Programming Overview

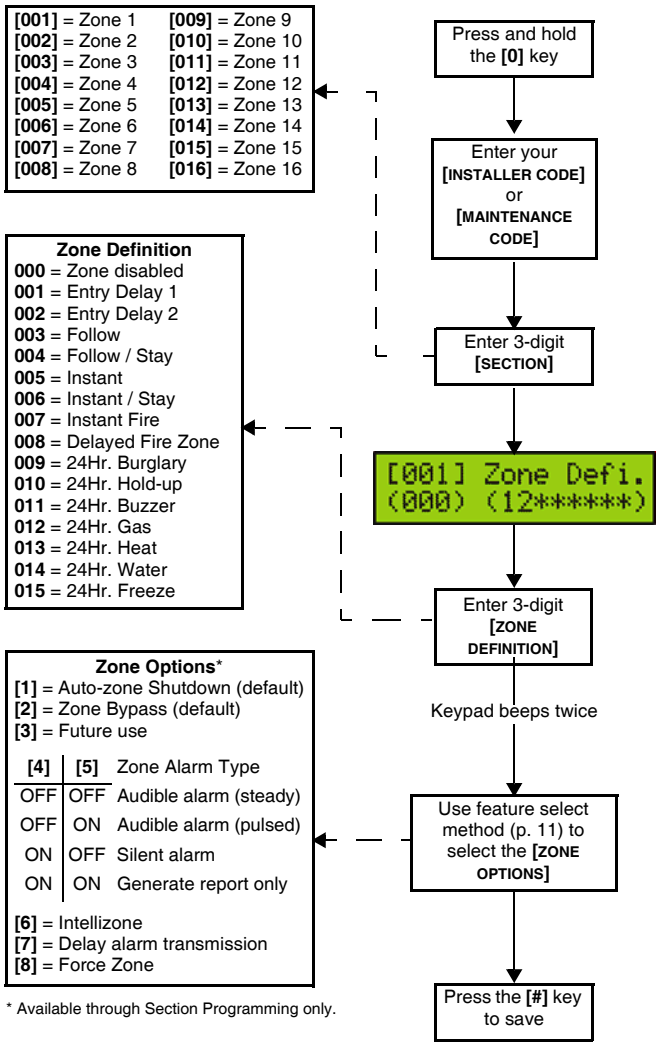

Zone Definitions

Sections [001] to [016] represent zones 1 through 16 respectively, whereby the first three digits in each of these sections represents the zone's definition. To **disable a zone**, enter 000 and then press the **[#]** key. There are 15 available Zone Definitions, which are described as follows:

Entry Delay 1

Sections [001] to [016]: Zones 1 to 16, 3-digit # = 001

When the system is armed and a zone defined with Entry Delay 1 opens, the console will generate an alarm after the programmed Entry Delay 1 Timer elapses. This is to provide users with enough time to enter the protected area and disarm the system. Entry Delay zones are commonly used at the entry/exit points of the protected area (i.e., front/back door, garage, etc.). Using different Entry Delays (see Entry Delay 2 below) is useful when, for example, one entry point requires a longer delay than another entry point.

Entry Delay 1 Timer
Section [060]: 001 to 255 seconds; 000 = Disabled; Default = 45 seconds

Enter the desired 3-digit delay value from 000 to 255 seconds into section [060] to program the Entry Delay 1 Timer.

Entry Delay 2

Sections [001] to [016]: Zones 1 to 16, 3-digit # = 002

Entry Delay 2 zones are identical to the Entry Delay 1 zones (see Entry Delay 1 on page 13), except it uses a separate Entry Delay Timer.

Entry Delay 2 Timer
Section [061]: 001 to 255 seconds; 000 = Disabled; Default = 45 seconds

Enter the desired 3-digit delay value from 000 to 255 seconds into section [061] to program the Entry Delay 2 Timer.

Follow Zones

Sections [001] to [016]: Zones 1 to 16, 3-digit # = 003

When an armed Follow zone opens, the console will immediately generate an alarm unless an Entry Delay zone opens first as described in the situations below:

- If an armed Follow zone opens after an Entry Delay zone opens, the console waits until the Entry Delay Timer has elapsed before generating an alarm.
- If an armed Follow zone opens after more than one Entry Delay zone opens, the console will wait until the Entry Delay Timer of the zone that opened first has elapsed.

This feature is commonly used when a motion detector is protecting the area occupied by the entry point keypad. This will prevent the motion detector from causing an alarm when a user enters through the entry point to disarm the system.

Follow/Stay Zones

Sections [001] to [016]: Zones 1 to 16, 3-digit # = 004

Follow/Stay zones function as follows:

- All zones defined as Follow/Stay zones become Follow zones (refer to Follow Zones on page 13) when the Magellan system is Regular armed.
- All zones defined as Follow/Stay zones become Stay zones when the Magellan system is Stay or Instant armed.

Instant Zones

Sections [001] to [016]: Zones 1 to 16, 3-digit # = 005

When an armed Instant zone opens, the console immediately generates an alarm. Instant zones are commonly used for windows, patio doors, skylights and other perimeter type zones.

Instant/Stay Zones

Sections [001] to [016]: Zones 1 to 16, 3-digit # = 006

Instant/Stay zones function as follows:

- All zones defined as Instant/Stay zones become Instant zones (refer to Instant Zones on page 14) when the Magellan system is Regular armed.
- All zones defined as Instant/Stay zones become Stay zones when the Magellan system is Stay or Instant armed.

Standard 24Hr. Fire Zones

Sections [001] to [016]: Zones 1 to 16, 3-digit # = 007

Whenever a Standard 24Hr. Fire zone opens, whether it is armed or disarmed, the console will generate the following:

- The console can send the corresponding Alarm Report Code from sections [187] to [190].
- Alarms are always audible regardless of other settings. Fire alarms generate an intermittent (pulsed) bell/siren output signal as shown in Figure 17 on page 14.

Figure 17: Bell/Siren Output during a Fire Alarm

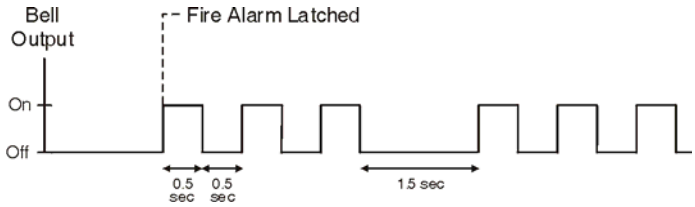

Delayed Fire Zones

Sections [001] to [016]: Zones 1 to 16, 3-digit # = 008

When a Delayed 24Hr. Fire zone opens, whether it is armed or disarmed, the console will react as shown in Figure 18 on page 14. Delayed 24Hr. Fire zones are commonly used in residential homes where a smoke detector often generates false alarms (i.e., burning bread, etc.).

Figure 18: Delayed Fire Zone

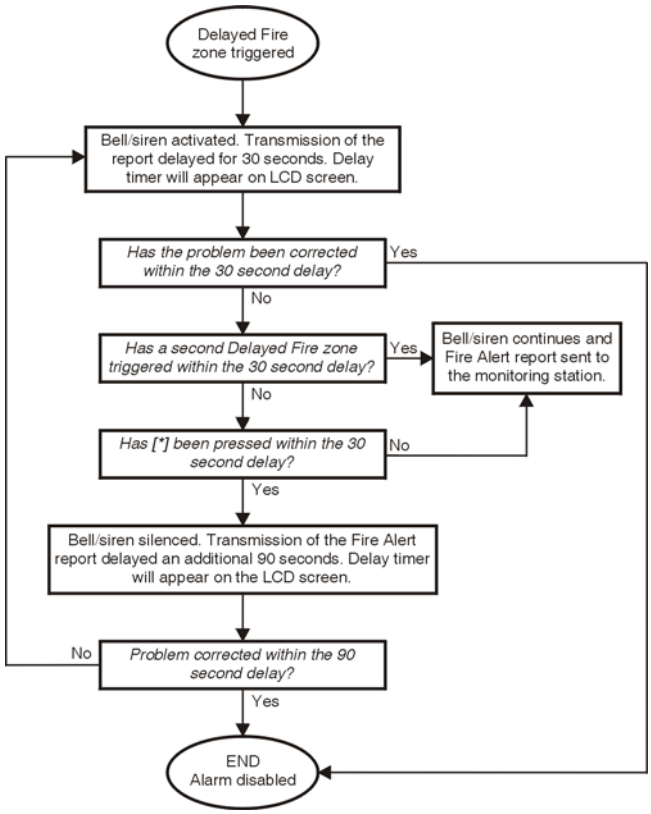

24Hr. Burglary Zones

Sections [001] to [016]: Zones 1 to 16, 3-digit # = 009

Whenever a 24Hr. Burglary zone opens, whether the system is armed or disarmed, the console will immediately generate an alarm.

24Hr. Hold-up Zones

Sections [001] to [016]: Zones 1 to 16, 3-digit # = 010

When a 24Hr. Hold-up zone opens, whether it is armed or disarmed, the console will immediately generate an alarm. The SIA FSK reporting format includes specific report codes to identify the alarm as a Hold-up alarm (see Appendix 1: Automatic Report Code List on page 35).

24Hr. Buzzer Zones

Sections [001] to [016]: Zones 1 to 16, 3-digit # = 011

This zone definition is particularly useful when a user wishes to be notified when something such as a safe or locker within the home has been accessed (i.e., a child accessing a valuable collection). This zone definition functions as follows:

- Whenever a 24Hr. Buzzer zone opens, whether the console is armed or disarmed, the console sets off the keypad's buzzer to indicate that the zone was breached.
- The console will report the alarm, but will not enable the bell/siren output.
- Enter any valid Access code on the keypad to stop the buzzer.

24Hr. Gas Zones

Sections [001] to [016]: Zones 1 to 16, 3-digit # = 012

When a 24Hr. Gas zone opens, whether it is armed or disarmed, the console will immediately generate an alarm. The SIA FSK reporting format includes specific report codes to identify the alarm as a Gas alarm (see Appendix 1: Automatic Report Code List on page 35).

24Hr. Heat Zones

Sections [001] to [016]: Zones 1 to 16, 3-digit # = 013

When a 24Hr. Heat zone opens, whether it is armed or disarmed, the console will immediately generate an alarm. The SIA FSK reporting format includes specific report codes to identify the alarm as a Heat alarm (see Appendix 1: Automatic Report Code List on page 35).

24Hr. Water Zones

Sections [001] to [016]: Zones 1 to 16, 3-digit # = 014

When a 24Hr. Water zone opens, whether it is armed or disarmed, the console will immediately generate an alarm. The SIA FSK reporting format includes specific report codes to identify the alarm as a Water alarm (see Appendix 1: Automatic Report Code List on page 35).

24Hr. Freeze Zones

Sections [001] to [016]: Zones 1 to 16, 3-digit # = 015

When a 24Hr. Freeze zone opens, whether it is armed or disarmed, the console will immediately generate an alarm. The SIA FSK reporting format includes specific report codes to identify the alarm as a Freeze alarm (see Appendix 1: Automatic Report Code List on page 35).

Zone Options

Sections [001] to [016] represent zones 1 through 16 respectively as demonstrated in Figure 16 on page 13. After entering the 3-digit Zone Definition (see Zone Definitions on page 13), select one or more of the following Zone Options by using the Feature Select Programming Method (see page 11).

Auto-zone Shutdown

Sections [001] to [016]: Zones 1 to 16; Option [1]

Option [1] OFF = Auto-zone Shutdown disabled
Option [1] ON = Auto-zone Shutdown enabled (default)

If, in a single armed period, the number of alarms generated by a zone with the Auto-zone Shutdown option enabled exceeds the number defined by the Auto-zone Shutdown Counter, the console will no longer generate an alarm for that zone. The Auto-zone Shutdown Counter resets every time the system is armed.

Auto-zone Shutdown Counter

Section [067]: 001 to 015 alarms; 000 = Disabled; Default = 5 alarms

Enter the desired limit into section [067] to program the Auto-zone Shutdown Counter.

Bypass Option

Section [001] to [016]: Zones 1 to 16; Option [2]

Option [2] OFF = Bypass option disabled
Option [2] ON = Selected zone is Bypass enabled (default)

When a user uses the *Bypass Programming* feature, only zones with the Bypass option enabled can be programmed as bypassed.

Fire zones cannot be programmed with the Bypass option because the console will not bypass a Fire zone.

Alarm Types

Sections [001] to [016]: Zones 1 to 16; Options [4] and [5]

When an alarm condition occurs, the console can be programmed to react as shown in Table 2 on page 15.

Table 2: Alarm Type Options

Options [4]	Options [5]	Description
OFF	OFF	**Audible steady alarm (default)** When the conditions for an alarm have been met, the control panel can transmit the appropriate Zone Alarm report code (see page 25) and provides a steady output for the on-board siren.
OFF	ON	**Audible pulsed alarm** When the conditions for an alarm have been met, Magellan can transmit the appropriate Zone Alarm report code (see page 25) and provides a pulsed output (see Figure 17 on page 14) for the on-board siren.
ON	OFF	**Silent alarm** When the conditions for an alarm are met, the control panel can transmit the appropriate Zone Alarm report code (see page 25) and will not activate the control panel's bell output. The appropriate ARM or STATUS LED on the keypads will flash to indicate an alarm and the user will still have to disarm the system.
ON	ON	**Report only** When the conditions for an alarm have been met, the control panel can transmit the appropriate Zone Alarm report code (see page 25). The system will not have to be disarmed.

The Alarm Type options cannot be programmed for Fire zones. Fire zones are automatically programmed with an audible pulsed alarm. This cannot be altered.

Intellizone

Sections [001] to [016]: Zones 1 to 16; option [6]

Option [6] OFF = Intellizone disabled (default)
Option [6] ON = Intellizone enabled

This feature reduces the possibility of false alarms. When a zone with the Intellizone option opens, the console does not immediately generate an alarm. First it triggers the Intellizone Delay Timer. If any of the following conditions occur during this period, the panel will generate an alarm:

- During the Intellizone Delay, a second zone has caused an alarm.
- During the Intellizone Delay, the zone in alarm has restored (closed) and re-occurred (opened).
- The zone in alarm is still open after the Intellizone Delay has elapsed.

Intellizone Delay Timer
Section [065]: 010 to 255 seconds; Default = 48 seconds

Enter the desired 3-digit value into section [065] to program the Intellizone Delay Timer.

Delay Before Alarm Report Code Transmission

Sections [001] to [016]: Zones 1 to 16; option [7]

Option [7] OFF = Delay alarm transmission disabled (default)
Option [7] ON = Delay alarm transmission enabled

This feature is commonly used with Entry Delay zones to reduce false alarms created by new users who may not disarm the system in time. This feature works as follows:

- When an alarm condition occurs on a zone with this option enabled, the console enables the bell/siren output, but does not report the alarm to the monitoring station until the end of the Alarm Transmission Delay.
- During this period, disarming the system disables the bell/siren output and cancels the report code transmission.

Alarm Transmission Delay
Section [075]: 001 to 255 seconds; 000 = Disabled; Default = 0 seconds

Enter the desired 3-digit delay value into section [075] to program the Alarm Transmission Delay.

Force Zones

Sections [001] to [016]: Zones 1 to 16; Option [8]

Option [8] OFF = Force zone disabled
Option [8] ON = Selected zone is Force enabled (default)

Any open Force zones at the time of arming will be considered deactivated by the console. If during this period a deactivated zone is closed, the console will revert that zone to active status. Consequently, the console will generate an alarm if the zone is breached.

Fire zones cannot be programmed with the Force zone option because the console will not bypass a Fire zone when the system is being Force armed.

Stay Delay Zones

Section [094]: Options [1]

Option [1] OFF = Stay Delay zone disabled (default)
Option [1] ON = Stay Delay zone enabled

When a Stay Delay zone is armed using the Stay or Instant arming methods and the zone is triggered, an alarm will not generate until the programmed Stay Delay elapses. A zone defined as Stay Delay 1 follows the Entry Delay 1 Timer. Likewise, a zone defined as Stay Delay 2 follows the Entry Delay 2 Timer. To program the Entry Delay Timers, refer to Entry Delay 1 and Entry Delay 2 on page 13.

Zones 15 and 16 Become Hardwire Zones

Section [095]: Options [1] and [2]
Option [1] OFF = Wireless zone 15 remains unchanged (default)
Option [1] ON = Wireless zone 15 uses the on-board hardwire zone input 1

Option [2] OFF = Wireless zone 16 remains unchanged (default)
Option [2] ON = Wireless zone 16 uses the on-board hardwire zone input 2

The Magellan console comes with two on-board zone inputs, hardwire zone inputs 1 and 2. Section [095] options [1] and [2] allow you to convert zones 15 and 16 from wireless to hardwire by allowing you to connect hardwire detection devices (i.e., door contacts) to zone inputs 1 and 2.

- With section [095] option [1] ON, zone 15 is connected to zone input 1.
- With section [095] option [2] ON, zone 16 is connected to zone input 2.

EOL (End-Of-Line) Zones

Section [095]: Option [3]
Option [3] OFF = Hardwire zones 1 & 2 do not require EOL resistors (default)
Option [3] ON = Hardwire zones 1 & 2 require EOL resistors

This feature only applies to Magellan's on-board zone inputs. Section [095] options [1] and/or [2] (see Zones 15 and 16 Become Hardwire Zones on page 16) must be ON in order to use this feature.

If the hardwire detection devices connected to Magellan's zone inputs 1 and 2 have input terminals that require 1KΩ end-of-line resistors, enable (ON) section [095] option [3]. For details on using EOL resistors, refer to page 8.

Wireless Programming

The Magellan system supports up to 16 wireless zones and two wireless doorbells. These wireless zones are monitored using transmitters such as wireless detectors and door contacts. The Magellan console only supports the Paradox Magellan series of wireless transmitters. The programming of the transmitters is accomplished in two steps:

1. Assign the wireless transmitter to Magellan.
2. Program the wireless zone.

Assigning Wireless Zone Transmitters

Sections [021] to [036]: Zones 1-16; Wireless Transmitters 1-16

Sections [021] to [036] represent zones 1 to 16. A wireless transmitter assigned to a section ([021] to [036]) will be assigned to the zone represented by the section.

For example, a wireless transmitter assigned to section [025] will be assigned to zone 5.

To assign a wireless transmitter:

1. Access the installer programming mode (see page 11).
2. Enter the **[SECTION]** corresponding to the desired zone.
3. Enter the 6-digit **[SERIAL NUMBER]** of the wireless transmitter.

The serial number is located on the inside of the wireless transmitter.

The wireless transmitters must be activated once having been assigned to the Magellan console. To activate a transmitter, insert the batteries and close the cover. To ensure proper synchronization between the console and the transmitter, open and close the zone corresponding to the transmitter.

Are the zones that have wireless transmitters assigned to them programmed? See Zone Definitions on page 13 and Zone Options on page 15.

*Wireless transmitters can also be assigned through the Installer menu. Press **[MENU]** + **[4]** + **[INSTALLER CODE]** + **[6]**. Select the zone you wish to assign the transmitter to, press **[OK]**, open the cover of the transmitter and then close the cover. The transmitter has been assigned. Refer to the Magellan Quick Setup on page 4 for more information on the Installer menu and the assignment of the wireless transmitters.*

Assigning Wireless Doorbells to the Console

Sections [058] and [059]: Wireless Doorbells 1 and 2

Magellan supports the use of two wireless doorbells. By connecting a pushbutton to the Universal Transmitter inputs of a Magellan Wireless Door Contact (MG-DCT1), the MG-DCT1 will transmit a signal to Magellan whenever the pushbutton is pressed. Magellan will in turn become a doorbell and play a predetermined tone (see Wireless Doorbell Tones on page 17).

Please refer to the appropriate *Magellan Wireless Door Contact Instruction* for information on the installation and configuration of the wireless door contact.

To assign a wireless doorbell:

1. Access the installer programming mode (see page 11).
2. Enter the **[SECTION]** corresponding to the desired doorbell.
3. Enter the 6-digit **[SERIAL NUMBER]** of the MG-DCT1.

Wireless Doorbell Tones

Section [096]: Options [1] to [4]

Options [1] and [2] = Set tone for wireless doorbell 1
Options [3] and [4] = Set tone for wireless doorbell 2

Section [096] options [1] to [4] set the tones that will be played when Magellan receives a signal from either wireless doorbell 1 or 2 or both. Magellan comes with four tones. Refer to Table 3 on page 17 to set the desired tone.

Table 3: Wireless Doorbell Tones

Section [096] - Options [1] and [2]	Doorbell Tone #
Option [1] OFF / Option [2] OFF (Doorbell 1)	Tone 1 (default)
Option [1] OFF / Option [2] ON (Doorbell 1)	Tone 2
Option [1] ON / Option [2] OFF (Doorbell 1)	Tone 3
Option [1] ON / Option [2] ON (Doorbell 1)	Tone 4
Section [096] - Options [3] and [4]	**Doorbell Tone #**
Option [3] OFF / Option [4] OFF (Doorbell 2)	Tone 1
Option [3] OFF / Option [4] ON (Doorbell 2)	Tone 2 (default)
Option [3] ON / Option [4] OFF (Doorbell 2)	Tone 3
Option [3] ON / Option [4] ON (Doorbell 2)	Tone 4

Deleting Assigned Wireless Transmitters

Sections [021] to [036]: Zones 1-16; Wireless Transmitters 1-16
Sections [058] and [059]: Wireless Doorbells 1 and 2

To delete an assigned wireless transmitter:

1. Access the installer programming mode (see page 11).
2. Enter the **[SECTION]** corresponding to the desired zone or doorbell.
3. Press the **[0]** key six times to clear the wireless transmitter's serial number.

Viewing Wireless Transmitter Signal Strength

Sections [021] to [036]: Zones 1-16; Wireless Transmitters 1-16

Once wireless transmitters have been assigned to the Magellan console, the signal strength of each transmitter can be verified in sections [021] to [036] (zones 1 to 16 respectively). Each section represents the signal strength viewer for the wireless transmitter assigned to the corresponding zone.

For example, section [021] is the viewer for the wireless transmitter assigned to zone 1 and section [036] is the viewer for the wireless transmitter assigned to zone 16.

The signal strength is displayed using two terms:

- "Good": This is an average reading and is acceptable.

- “Weak”: This is the weakest reading. The transmitter should be moved to another location. Sometimes moving the transmitter by a small amount will greatly increase the signal reception.

To view the signal strength of a wireless transmitter:

1. Access the installer programming mode (see page 11).
2. Enter the **[SECTION]** corresponding to the desired zone or doorbell.
3. The LCD will display either “Good” or “Weak” on the screen.

When performing a signal strength test, Magellan also displays the noise level surrounding each of the transmitters. “Low” refers to a low level of noise while “High” refers to a noisy environment.

The signal strength can also be verified by performing a system test. See Quick Setup on page 4 for more information.

Assigning Remote Controls

The Magellan console accepts up to 16 fully programmable remote controls. Every User code can have one remote control assigned to it.

To assign a remote control:

1. Press **[MENU]** + **[4]** + **[2]**.

Programming the Remote Control’s Buttons

Sections [161] to [176]: Users 1 to 16; Remote Controls 1 to 16

Sections [161] to [176] represent the remote controls assigned to User codes 1 to 16 (see Table 4 on page 18).

The remote control will transmit a signal for only 1 second when a button is pressed and held for 1 second. This is done to conserve the remote control’s batteries.

Although remote controls can be assigned by the System Master, the remote control’s buttons are programmed by the installer.

Each remote control can be programmed to perform different actions. Each digit in sections [161] to [176] represents a button or combination of buttons (see Table 4 on page 18).

To program a remote control’s buttons:

1. Access the installer programming mode (see page 11).
2. Enter the **[SECTION]** (sections [161] to [176]) corresponding to the desired remote control.
3. Enter the **[HEXADECIMAL VALUE]** (0 to F) of the desired button option from Table 19 (page 20).

If you do not wish to program all the buttons or button combinations, press the **[#]** key at any time to save and exit.

If you enable any Panic button options, you must enable the Panic options in the control panel (refer to Panic Alarms on page 24).

Table 4: MG-REM1 Remote Control Button Programming

Section	RC#	Data (Default: 4DE0)				User #
[161]	1	_____	_____	_____	_____	001
		🔒	⏻	→	⏻ + →	
[162]	2	_____	_____	_____	_____	002
		🔒	⏻	→	⏻ + →	
[163]	3	_____	_____	_____	_____	003
		🔒	⏻	→	⏻ + →	
[164]	4	_____	_____	_____	_____	004
		🔒	⏻	→	⏻ + →	
[165]	5	_____	_____	_____	_____	005
		🔒	⏻	→	⏻ + →	
[166]	6	_____	_____	_____	_____	006
		🔒	⏻	→	⏻ + →	
[167]	7	_____	_____	_____	_____	007
		🔒	⏻	→	⏻ + →	
[168]	8	_____	_____	_____	_____	008
		🔒	⏻	→	⏻ + →	
[169]	9	_____	_____	_____	_____	009
		🔒	⏻	→	⏻ + →	
[170]	10	_____	_____	_____	_____	010
		🔒	⏻	→	⏻ + →	
[171]	11	_____	_____	_____	_____	011
		🔒	⏻	→	⏻ + →	

MG-REM1 Remote Control Buttons

The button of the MG-REM1 remote control has been permanently programmed to disarm the system. The button’s functionality cannot be altered. However, when a system is disarmed and the Magellan console’s radio is on, the button can be used for volume control.

The + , + ⏻ and + → button combinations do not function with the MG-REM1 remote control.

Section	RC#	Data (Default: 4DE0)				User #
[172]	12	_____	_____	_____	_____	012
		🔒	⏻	→	⏻ + →	
[173]	13	_____	_____	_____	_____	013
		🔒	⏻	→	⏻ + →	
[174]	14	_____	_____	_____	_____	014
		🔒	⏻	→	⏻ + →	
[175]	15	_____	_____	_____	_____	015
		🔒	⏻	→	⏻ + →	
[176]	16	_____	_____	_____	_____	016
		🔒	⏻	→	⏻ + →	

MG-REM1 Remote Control Buttons

MG-REM1

Table 5: MG-REM2 Remote Control Button Programming

Section	RC#	Data (Default: 4DE0)				User #
[161]	1	_____	_____	_____	_____	001
		🔒	•	⁝	• + ⁝	
[162]	2	_____	_____	_____	_____	002
		🔒	•	⁝	• + ⁝	
[163]	3	_____	_____	_____	_____	003
		🔒	•	⁝	• + ⁝	
[164]	4	_____	_____	_____	_____	004
		🔒	•	⁝	• + ⁝	
[165]	5	_____	_____	_____	_____	005
		🔒	•	⁝	• + ⁝	
[166]	6	_____	_____	_____	_____	006
		🔒	•	⁝	• + ⁝	
[167]	7	_____	_____	_____	_____	007
		🔒	•	⁝	• + ⁝	
[168]	8	_____	_____	_____	_____	008
		🔒	•	⁝	• + ⁝	
[169]	9	_____	_____	_____	_____	009
		🔒	•	⁝	• + ⁝	
[170]	10	_____	_____	_____	_____	010
		🔒	•	⁝	• + ⁝	
[171]	11	_____	_____	_____	_____	011
		🔒	•	⁝	• + ⁝	
[172]	12	_____	_____	_____	_____	012
		🔒	•	⁝	• + ⁝	
[173]	13	_____	_____	_____	_____	013
		🔒	•	⁝	• + ⁝	
[174]	14	_____	_____	_____	_____	014
		🔒	•	⁝	• + ⁝	
[175]	15	_____	_____	_____	_____	015
		🔒	•	⁝	• + ⁝	
[176]	16	_____	_____	_____	_____	016
		🔒	•	⁝	• + ⁝	

MG-REM2 Remote Control Buttons

MG-REM2

The 🔓 button of the MG-REM2 remote control has been permanently programmed to disarm the system. The button's functionality cannot be altered. However, when a system is disarmed and the Magellan console's radio is on, the 🔓 button can be used for volume control.

The 🔒 + 🔓, 🔒 + • and 🔓 + ⁝ button combinations do not function with the MG-REM2 remote control.

The ℹ button of the MG-REM2 remote control has been permanently programmed to request feedback from the system. The button's functionality cannot be altered.

Figure 19: Remote Control Button Options

Hex Value	Description	Hex Value	Description
0	Button disabled	**8**	Panic 1†
1	Regular arming	**9**	Panic 2†
2	Stay arming	**A***	Panic 3†
3	Instant arming	**B***	PGM Activation (Event Group #07 - Refer to the Magellan Programming Guide)
4	Force arming	**C***	PGM Activation (Event Group #08 - Refer to the Magellan Programming Guide)
5	Future use	**D***	Turn FM radio ON/OFF
6	Future use	**E***	FM radio memory scan
7	Future use	**F***	Paramedic alarm

* = Hex values A to F are keys **[1]** to **[6]** from Magellan's Center Keypad.

† = The panic feature (section [091] options **[1]** to **[3]**; see page 24) must be enabled in order for this to work.

Arming and Disarming

Regular Arming Switches to Stay Arming

Section [092]: Option [4]
Option [4] OFF = Regular arming switches to Stay arming disabled (default)
Option [4] ON = Regular arming switches to Stay arming enabled

If a user Regular arms the system, but does not exit through (open and close) an Entry Delay zone during the Exit Delay, the console can be programmed to switch from Regular arming to Stay arming.

Regular Arming Switches to Force Arming

Section [092]: Option [5]
Option [5] OFF = Regular arming switches to Force arming disabled
Option [5] ON = Regular arming switches to Force arming enabled (default)

With this feature enabled, the console will always Force arm instead of Regular arm when a valid User code is entered. In installations where the user must always Force arm when leaving the protected area, this feature allows users to Force arm after entering their User code.

Stay Arming Switches to Force Arming

Section [092]: Option [6]
Option [6] OFF = Stay Arming Switches to Force Arming disabled (default)
Option [6] ON = Stay Arming Switches to Force Arming enabled

With this feature enabled, the console will always Force arm and Stay arm when a valid User code is entered even if there are perimeter zones open.

Timed Auto-Arming

Section [092]: Option [1]
Option [1] OFF = Timed Auto-arming disabled (default)
Option [1] ON = Timed Auto-arming enabled

The Magellan system can be programmed to arm every day at the time specified by the Auto-arm Timer (see Auto-arm Timer on page 21). The following also apply:

- The Auto-arming options (see Auto-Arming Options on page 21) determine the arming method.
- Any open zones detected when the system is Auto-armed will be bypassed regardless of their definition (except 24Hr. zones).
- The console will enter a 60-second Exit Delay period before arming the system. At this point, Auto-arming can be cancelled by entering a valid Access code.
- Once the system has successfully armed, the console can transmit the Timed Auto-Arming report code programmed in section [124].

Example: To automatically arm the system everyday at 6:15PM, enable section [092] option [1] to activate Timed Auto-arming and then key in 18:15 into section [085].

Auto-arm Timer

Section [085]

Using the 24-hour clock (i.e., 6:30PM = 18:30), program the time that you wish the console to attempt to arm the system and/or send the Late to Close report code.

No Movement Auto-Arming

Section [092]: Option [2]
Option [2] OFF = No Movement Auto-arming disabled (default)
Option [2] ON = No Movement Auto-arming enabled

If no movement occurs in a zone's protected area for the period specified by the No Movement Timer (see below), the console can automatically arm the system.

- The Auto-arming option (see Auto-Arming Options on page 21) determines the system's arming method.
- Any open zones detected when the system is Auto-armed will be bypassed regardless of their definition (except 24Hr. zones).
- Upon arming, the console will transmit the No Movement report code if programmed in section [124].
- Regardless of whether the system was successfully armed or not, the console will always transmit the No Movement report code if programmed in section [124].
- If No Movement Auto-arming is disabled, the console will still send the No Movement report code at the time specified by the No Movement Timer.

Example: To arm the system whenever there is no movement for a period of 4 hours, enable section [092] option [2] (No Movement Auto-arming) and then in section [064], enter 016 (16 x 15min. = 240min. = 4 hours).

No Movement Timer

Section [064]: 001 to 255 x 15 minutes; 000 = Disabled; Default = 000

Program the interval of time without movement that you wish the console to wait before arming and/or sending the No Movement report code. If No Movement Auto-arming is disabled, the console can still send the No Movement report code when no movement has been detected for the period specified by the No Movement Timer.

Auto-Arming Options

Section [092]: Option [3]
Option [3] OFF = Auto-arm system using Regular arm (default)
Option [3] ON = Auto-arm system using Stay arm

When using Timed Auto-arming (see page 21) or No Movement Auto-Arming (see page 21), the console can Regular or Stay arm the system.

One-Touch Arming

Section [092]: Options [7] and [8]
Option [7] OFF = One-touch Regular/Force arming disabled
Option [7] ON = One-touch Regular/Force arming enabled (default)

Option [8] OFF = One-touch Stay arming disabled
Option [8] ON = One-touch Stay arming enabled (default)

The One-touch arming features allow users to arm the system without having to enter any Access codes. To arm the system, press and hold the appropriate key for approximately 2 seconds.

Exit Delay

Section [062]: 001 to 255 seconds; 000 = disabled; Default = 60 seconds

The Exit Delay determines the amount of time a user has to leave the protected area before Magellan arms the system. The Exit Delay applies to all zones (except 24Hr zones) in the system. Program the Exit Delay from 001 to 255 seconds.

Bell Squawk on Arm/Disarm with Remote Control

Section [093]: Option [3]
Option [3] OFF = Bell squawk disabled
Option [3] ON = Bell squawk enabled (default)

When option [3] is enabled (ON), the siren will squawk once upon arming with a remote control and twice upon disarming with a remote control.

No Exit Delay when Arming with Remote Control

Section [093]: Option [4]
Option [4] OFF = Provides Exit Delay when arming with remote control (default)
Option [4] ON = No Exit Delay when arming with remote control

When option [4] is enabled (ON), the console cancels the Exit Delay (arms instantly) when the system is armed with a remote control. When disabled, the Exit Delay Timer will start when the system is armed with a remote control.

Exit Delay Termination

Section [093]: Option [6]
Option [6] OFF = Exit Delay Termination disabled
Option [6] ON = Exit Delay Termination enabled (default)

When option [6] is enabled (ON), the console will reduce the Exit Delay to 10 seconds when an Entry Delay zone (see Exit Delay on page 22) is opened and closed during the Exit Delay.

Example: 15 seconds into a 45 second Exit Delay, an Entry Delay zone opens and closes. The remaining 30 seconds is reduced to 10 seconds.

Follow Zone Switches to Entry Delay 2

Section [093]: Option [7]
Option [7] OFF = Follow zone triggers an alarm (default)
Option [7] ON = Follow zone follows Entry Delay 2 when opened

When option [7] is enabled (ON) and an Entry Delay 1 zone is bypassed, an armed Follow zone that opens without an Entry Delay being triggered will switch to the Entry Delay 2 timer.

Example: Zone 1 is an Entry Delay zone and zone 2 is a Follow zone protecting the area where the keypad is installed. The system is armed but zone 1 is bypassed. With option [7] enabled, zone 2 will switch to and wait for the Entry Delay 2 timer to elapse before triggering an alarm.

Closing Delinquency Timer

Section [080]: 001 to 255 days; 000 = Disabled; Default = 000

The Magellan console will verify when the system was last armed at midnight of every day. If the last time the system was armed is greater than the programmed Closing Delinquency timer, the console will transmit a Closing Delinquency report code (see page 26) to the monitoring station.

Enter a value from 001 to 255 days into section [080] to program the Closing Delinquency timer. Enter 000 to disable the timer.

Stay Arm Siren Delay

Section [095]: Option [4]
Option [4] OFF = Stay Arm Siren Delay disabled
Option [4] ON = Stay Arm Siren Delay enabled (default)

When option [4] is enabled and an alarm is triggered on a stay armed system, the console plays an audible 15-second countdown that will increase in volume as the countdown progresses. While the system reports the alarm to the monitoring station immediately upon being triggered, the siren will not activate until the 15-second siren delay is complete.

Alarm Options

Bell Cut-off Timer

Section [063]: 001 to 255 minutes; 000 = Disabled; Default = 4 minutes

After an audible alarm, the siren will stop upon the disarming of the system or when the Bell Cut-Off timer has elapsed, whichever comes first.

Wireless Transmitter Supervision Options

Section [094]: Options [6] and [7]

This feature determines how the Magellan console will react to a Supervision Loss trouble. Table 6 shows the different Supervision Loss combinations available and how the system will react when armed or disarmed.

Table 6: Wireless Transmitter Supervision Options

Options [6]	Options [7]	Description
OFF	OFF	**Wireless transmitter supervision disabled**
OFF	ON	**Trouble only (default)** *System armed or disarmed:* If a Supervision Loss occurs on a zone, the console will display a trouble on the LCD screen and send a report to the monitoring station (if programmed).
ON	OFF	**Audible alarm when armed** *System armed:* If a Supervision Loss occurs on a zone, the console will follow the zone's Alarm Types setting (see page 15). *System disarmed:* If a Supervision Loss occurs on a zone, the console will display a trouble on the LCD screen and send a report to the monitoring station (if programmed).
ON	ON	**Audible alarm** *System armed:* If a Supervision Loss occurs on a zone, the console will follow the zone's Alarm Types setting (see page 15). *System disarmed:* It functions the same as Trouble Only setting, except it will also generate an audible alarm.

Supervision Bypass Options

Section [094]: Option [8]

Option [8] OFF = No Supervision Loss if detected on a bypassed zone (default)
Option [8] ON = Generate Supervision Loss if detected on a bypassed zone

- When option [8] is OFF, the Wireless Transmitter Supervision Options (see page 23) will follow the zone's bypass definition. This means the console will not perform any action if a Supervision Loss occurs on a bypassed zone.
- When option [8] is ON, the Wireless Transmitter Supervision Options (see page 23) will ignore the bypass definition. This means the console will generate an incident as per the set Wireless Transmitter Supervision Option if a Supervision Loss occurs on a bypassed zone.

Check-in Supervision Options

Section [103]: Options [1] to [8]; Zones 1 to 8; Default: All ON
Section [104]: Options [1] to [8]; Zones 9 to 16; Default: All ON

If enabled, Magellan can wait for each of its assigned wireless transmitters to send a status signal within a specified time (see Check-in Supervision Time on page 23) to confirm their presence and functionality. If a device has not sent a signal within the specified time period, Magellan can generate a trouble, an alarm and/or transmit a report code to the monitoring station as defined by the Wireless Transmitter Supervision Options (see page 23). Sections [103] and [104] determine which zones will be supervised and which will not. Enable the option pertaining to the zone you wish Magellan to supervise.

Check-in Supervision Time

Section [096]: Option [7]

Option [7] OFF = Check-in Supervision Time = 24Hrs (default)
Option [7] ON = Check-in Supervision Time = 80 minutes

Section [096] option [7] defines the time period that Magellan will expect a check-in status signal from the specified wireless transmitters as defined in the Check-in Supervision Options (see page 23). If no signal is received within the check-in supervision time, Magellan's reaction will be defined by the Wireless Transmitter Supervision Options (see page 23).

Tamper Recognition Options

Section [094]: Options [3] and [4]

This feature determines how the Magellan console will react to a zone tamper. Table 7 on page 24 shows the different Tamper Recognition combinations available and how the system will react when armed or disarmed.

Table 7: Tamper Recognition Options

Options [3]	Options [4]	Description
OFF	OFF	**Tamper Recognition disabled (default)**
OFF	ON	**Trouble only** *System armed or disarmed:* If a tamper wiring failure occurs on a zone, the console will generate a trouble and send a report to the monitoring station (if programmed).
ON	OFF	**Audible alarm when armed** *System armed:* If a tamper failure occurs on a zone, the console will follow the zone's Alarm Types setting (see page 15). *System disarmed:* If a tamper failure occurs on a zone, the console will generate a trouble and send a report to the monitoring station (if programmed).
ON	ON	**Audible alarm** *System armed:* If a tamper failure occurs on a zone, the console will follow the zone's Alarm Types setting (see page 15). *System disarmed:* It functions the same as Trouble Only setting, except it will also generate an audible alarm.

Tamper Bypass Options

Section [094]: Option [5]

Option [5] OFF = Ignore any tampers detected on a bypassed zone (default)
Option [5] ON = Generate tamper if detected on a bypassed zone

- When option [5] is ON, the Tamper Recognition feature (see page 23) will ignore the zone's bypass definition. This means the console will generate an incident as per the set Tamper Recognition option if a tamper occurs on a bypassed zone.
- When option [5] is OFF, the Tamper Recognition feature (see page 23) will follow the zone's bypass definition. This means the console will ignore any tampers that occur on a bypassed zone.

Panic Alarms

Section [091]: Options [1], [2] and [3]
Option [1] OFF = Panic 1 (Emergency Panic) disabled (default)
Option [1] ON = Panic 1 (Emergency Panic) enabled

Option [2] OFF = Panic 2 (Auxiliary Panic) disabled (default)
Option [2] ON = Panic 2 (Auxiliary Panic) enabled

Option [3] OFF = Panic 3 (Fire Panic) disabled (default)
Option [3] ON = Panic 3 (Fire Panic) enabled

Enable section [091] options [1], [2] and [3] to enable the system's three panic alarms. Each panic alarm is activated by pressing two keys simultaneously and holding them down for 2 seconds. See Table 8 on page 24 for the appropriate panic alarm keys. Whether these panic alarms will generate a silent or audible alarm is determined by section [091] options [4] to [6] (see Panic Alarm Types on page 24).

Table 8: Panic Alarm Keys

Keys to press	Panic Alarm Type
[1] and **[3]**	Panic 1 (Emergency Panic)
[4] and **[6]**	Panic 2 (Auxiliary Panic)
[7] and **[9]**	Panic 3 (Fire Panic)

Remote controls can also be programmed to generate panic alarms. See Programming the Remote Control's Buttons on page 18 for more information on programming remote controls to generate panic alarms.

Panic Alarm Types

Section [091]: Options [4], [5] and [6]
Option [4] OFF = Panic 1 (Emergency Panic) is silent (default)
Option [4] ON = Panic 1 (Emergency Panic) is audible

Option [5] OFF = Panic 2 (Auxiliary Panic) is silent (default)
Option [5] ON = Panic 2 (Auxiliary Panic) is audible

Option [6] OFF = Panic 3 (Fire Panic) is silent (default)
Option [6] ON = Panic 3 (Fire Panic) is pulsed

Options [4] to [6] represent the alarm types of panic alarms 1 to 3 respectively.

Silent Alarm: The Magellan console will emit a confirmation beep and transmit the appropriate Panic report code (if programmed in section [139]). The console will not enable its speaker or the system siren.

Audible Alarm: Same as the silent alarm except that the console will enable its speaker and system siren until a user cancels the alarm (disarms) with a valid Access code or when the Bell Cut-off timer elapses (if enabled; see Bell Cut-off Timer on page 23).

Pulsed Alarm (Fire Panic only): Same as the audible alarm except that the siren will be pulsed as shown in Figure 17 on page 14. Refer to Standard 24Hr. Fire Zones on page 14 for more information on a pulsed siren output.

Remote Panic Disarm Lock Delay

Section [078]: 001 to 255 seconds; 000 = Disabled; Default = 20 seconds

When a panic alarm is generated through the use of a remote control, the system cannot be disarmed by remote control during the Remote Panic Disarm Lock Delay.

Enter the desired 3-digit delay value into section [078] to program the Remote Panic Disarm Lock Delay.

Reporting and Dialer Settings

Report Codes

A report code is a 1- or 2-digit hexadecimal value consisting of digits from 1 to F. Each section from [120] to [156] represents a set of up to four specific events and each of these events can be programmed with a separate 1- or 2-digit report code.

Only the Ademco Slow, Silent Knight, and Sescoa formats support 1-digit report codes. To program a 1-digit report code, press the [0] key followed by the desired hexadecimal digit or vice versa.

When a specific event occurs, the console will attempt to transmit the programmed report code to the monitoring station. The method of report code transmission is defined by the *Reporting Formats* (see page 28) and the *Event Call Direction* (see page 28). These two items define how and where the report codes are transmitted. If you are using the Ademco Contact ID format, sections [120] to [156] do not have to be programmed (see Appendix 2: Ademco Contact ID Report Code List on page 37). For more information, refer to *Reporting Formats* (see page 28). The following sub-sections provide a brief description of the events that the Magellan console can report.

Arming Report Codes

Sections [120] to [123]

A report code can be programmed for each of the 16 User codes. When using an Access code to arm the system, the Magellan console can send the appropriate report code to the monitoring station, identifying which user armed the system.

Special Arming Report Codes

Sections [124] and [125]

Whenever the system is armed using one of the special arming features listed below, the console can send the appropriate report code to the monitoring station identifying how the system was armed.

Section [124]

- Timed Auto-arming: The system has armed itself at the programmed time (see page 21).
- Late to Close: Reports every day at the time specified by the Auto-arm Timer (see page 21).
- No Movement: The system has armed itself after the programmed period without movement (see No Movement Auto-Arming on page 21).
- Partial Arming: The system was Stay, Instant or Force Armed or armed with bypassed zones.

Section [125]

- One-touch Arming: The system was armed using a One-touch Arming feature (see page 22).
- Remote Arming: The system was armed using the WinLoad software.

Disarming Report Codes

Sections [126] to [129]

A report code can be programmed for each of the 16 User codes. Whenever an Access code is used to disarm the system or an alarm, the Magellan console can send the appropriate report code to the monitoring station, identifying which user disarmed the system.

The Disarming and the Special Disarming report codes can be transmitted every time the system is disarmed or only when the system is disarmed after an alarm (see Disarming Reporting Options on page 30).

Special Disarming Report Codes

Section [130]

Whenever using one of the special disarming features, the Magellan console can send the report code to the monitoring station, identifying how the system was disarmed.

- Cancel Auto-arm: The system is disarmed during the Timed Auto-arm's 60-second Exit Delay (see page 21). Only reports if Disarming Reporting Options (see page 30) are set to always report disarming.
- Remote Disarm: System is disarmed using the WinLoad software.

Zone Alarm Report Codes

Sections [131] to [134]

A report code can be programmed for each of the 16 available zones. Whenever a zone generates an alarm, the console can send the appropriate report code to the monitoring station, identifying which zone generated an alarm.

Zone Alarm Restore Report Codes

Sections [135] to [138]

A report code can be programmed for each of the 16 available zones. The Magellan console can transmit these report codes to the monitoring station identifying which zone was restored.

A zone is restored when it closes after generating an alarm or once the bell has cut off after alarm generation. Please refer to Zone Alarm Restore Report Codes on page 25.

Special Alarm Report Codes

Sections [139] and [140]

Whenever the system generates an alarm due to one of the conditions listed below, the control panel can send the appropriate report code to the monitoring station identifying the type of alarm.

Section [139]

- Emergency Panic: Panic keys **[1]** and **[3]** (see page 24) or the appropriate button(s) on a remote control (see page 18) have been pressed.
- Auxiliary Panic: Panic keys **[4]** and **[6]** (see page 24) or the appropriate button(s) on a remote control (see page 18) have been pressed.

- Fire Panic: Panic keys **[7]** and **[9]** (see page 24) or the appropriate button(s) on a remote control (see page 18) have been pressed.
- Recent Closing: Reports when an alarm is generated after arming the system within the period defined by the Recent Close Delay (see page 30).

Section [140]

- Auto-zone Shutdown: A zone communicates more than the programmed number of transmissions in a single armed period (see page 15).
- Duress: A Duress code is keyed in (see page 12).
- Paramedical alarm

Zone Tamper Report Codes

Section [141] to [144]

A report code can be programmed for each of the 16 available zones. Whenever a tamper or wire fault occurs on a zone, the Magellan console can send the appropriate report code to the monitoring station identifying which zone was tampered.

If Tamper Recognition (see page 23) is disabled, the console will not report the occurrence of any tampers, wire faults or tamper restores.

Zone Tamper Restore Report Codes

Sections [145] to [148]

A report code can be programmed for each of the 16 available zones. Whenever a tampered zone is restored, the Magellan console can send the appropriate report code to the monitoring station identifying which zone has been restored.

If Tamper Recognition (see page 23) is disabled, the console will not report the occurrence of any tampers, wire faults or tamper restores.

System Trouble Report Codes

Section [149] to [151]

Whenever the system generates one of the instances listed below, the console can send the appropriate report code to the monitoring station identifying the type of system trouble.

Section [149]

- Console Tamper: A tamper has been detected on the console itself (see Console Tamper Supervision on page 32).
- AC Failure: Magellan has detected a loss of AC power. Transmission of this report code can be delayed (see Power Failure Report Delay on page 30).
- Battery Failure: The backup battery is disconnected or battery voltage is ≤ (less than or equal to) a certain voltage.
- Timer Loss: The console has detected a loss in time or clock failure.

Section [150]

- Fail To Communicate: The Magellan console has failed all attempts to communicate with the monitoring station. The report code will be transmitted upon the next successful attempt.
- Wireless Low Battery: The battery voltage of an Omnia wireless transmitter (motion detector or contact switch) has dropped below recommended limits.
- Tx Supervision Loss: Check-in Supervision (see page 23) has been enabled and a transmitter is no longer communicating with the system.

System Trouble Restore Codes

Sections [152] to [154]

Whenever the system restores one of the troubles listed in sections [149] and [150] (see System Trouble Report Codes on page 26), the Magellan console can send the appropriate report code to the monitoring station identifying the type of system trouble restored. If Telephone Line Monitoring is enabled (see page 29), use the first two digits to program a TLM Restore report code that the console can transmit.

Special Reporting Codes

Sections [155] and [156]

Whenever the system generates one of the instances listed below, the Magellan console can send the appropriate report code to the monitoring station identifying the type of system occurrence.

Section [155]

- Cold Start: The console was completely shut down (no battery, no AC) and then was restarted.
- Test Report: A test report has been generated automatically (see page 30).
- WinLoad Logout: The console has ended communication with WinLoad.

Section [156]

- Installer logon: Installer has entered the programming mode.
- Installer Logout: Installer has exited the programming mode.
- Closing Delinquency: The last time the system was armed is greater than the programmed Closing Delinquency timer (see page 22).

Console Telephone Numbers

Magellan can dial up to two different monitoring station telephone numbers and one Pager telephone number. You can enter any digit from 0 to 9 and any special keys or functions (see Table 9 on page 26) up to a maximum of 32 digits. If the number is less than 32 digits, press the left **[ACTION]** key (**OK**) to save the message.

Table 9: Special Keys for Telephone Numbers

Keys to press	Action or Value
[*]	*
[#]	#
Center **[ACTION]** (pause) key	Add a 4-second pause to the telephone number. Press the key and a “P” will be inserted into the telephone number

Monitoring Station Telephone Numbers (MSTNs)

Section [111] = Monitoring Station Telephone Number 1
Section [112] = Monitoring Station Telephone Number 2

The Magellan console uses the MSTNs (Monitoring Station Telephone Numbers) programmed in sections [111] and/or [112] to connect and communicate with the monitoring station. The following situations also apply:

- If after eight attempts of calling one monitoring station telephone number have failed, the console will then dial the backup telephone number (if section [099] option [1] is enabled. See MSTN 2 as Backup Number on page 27).
- If the Alternate Dial option (see page 29) is enabled, the console will dial the programmed backup telephone number after every failed attempt (if section [099] option [1] is enabled. See MSTN 2 as Backup Number on page 27).
- If no backup telephone number is programmed, the console will never report to the backup telephone number.

For more information on how these telephone numbers are used, please refer to Event Call Direction on page 28 and Reporting Formats on page 28. Also refer to Delay Between Dialing Attempts on page 29.

MSTN 2 as Backup Number

Section [099]: Option [1]

Option [1] OFF = Use MSTN 2 as a monitoring station telephone number only

Option [1] ON = MSTN 2 can be used a backup telephone number (default)

MSTN 2 can also be used as a backup telephone number. If section [099] option [1] is enabled (ON) the console will use MSTN 2 as a backup telephone number.

For more information, please refer to Monitoring Station Telephone Numbers (MSTNs) on page 27 and Alternate Dial Option on page 29.

Pager Telephone Number

Section [113]

The Magellan console uses the Pager telephone number programmed in section [113] to connect and communicate the numeric pager message programmed in section [114] (see Pager Reporting Message on page 27) to a pager.

Pager Reporting Message

Section [114]: 32-digit decimal number (0 to 9 as well as **[*]** and **[#]**)

Program the desired numeric message you wish to send whenever the console dials the Pager telephone number in section [114]. If the message is less than 32 digits, press the left **[ACTION]** key (**OK**) to save the message.

Voice Message Telephone Numbers

The Magellan console will use the Voice Message telephone numbers (which are programmed in the Installer menu. Refer to the Magellan Quick Setup Guide for more information) to play a pre-recorded message to an external telephone or cellular telephone. Please note the following when programming and using this feature:

- The console will only dial a Voice Message telephone number when the system is in alarm. The console begins with the first programmed Voice Message telephone number.
- When the call is connected, the console will play the pre-recorded message and the zone labels of all the zones that are in alarm.
- Once the telephone call from the Magellan console is received, the **[#]** key on the telephone can be pressed twice to acknowledge and end the message or the **[1]** can be pressed to use the speakerphone feature and talk through the Magellan console.
- The console will repeat the message a programmed amount of times (see Voice Message Repetitions on page 27) if no acknowledgement is immediately received.
- If no acknowledgement is received before the number of repetitions has elapsed, the console will then call the next programmed Voice Message telephone number and repeat the process.
- After calling the last programmed Voice Message telephone number without an acknowledgement, the console will once again call the first Voice Message telephone number and repeat the process a maximum of three times.
- If no acknowledgement is received after the third time, the console will generate a Fail to Comm. event and trouble.

Voice Message Repetitions

Section [079]: 001 to 255 repetitions; Default = 3 repetitions

This feature determines the amount of times the console will repeat the pre-recorded message played with the Voice Message telephone number without receiving an acknowledgement. Enter any 3-digit number from 001 to 255 into section [079] to program the Voice Message Repetitions feature.

Service Telephone Number

Section [119]

When a specific trouble occurs (Fail to Comm., Console Tamper or Supervision Loss), the console will offer you the option of calling the telephone number programmed in section [119]. After selecting the option, the console becomes a speakerphone.

Refer to the *Magellan User Guide* for more information on using this feature.

Utility Reporting

Within the Utility Reporting menu, customize what events and when these events will be reported to the user. One to four report types can be programmed to have the Magellan console call the user on up to two different telephone numbers with a pre-recorded voice message when certain conditions are met. Once the telephone call from the Magellan console is received, the **[#]** key on the telephone can be pressed twice to acknowledge and end the message or the **[1]** can be pressed to use the speakerphone feature and talk through the Magellan console.

To program the Utility Reporting feature using the Magellan console:

1. Press **[MENU]** and then press the **[4]** key.
2. Enter the **[INSTALLER CODE]** and then press the **[3]** key.
3. Press **[NEXT]** until the Utility Reporting screen appears, then press **[OK]**.

4. Press **[NEXT]** until the desired telephone number appears, then press **[OK]**.
5. Enter the desired telephone number and then press **[OK]** twice.
6. Press **[NEXT]** until the desired report type appears, then press **[OK]** (see Report Types on page 28).
7. Press **[NEXT]** until the Record Alrm Mes? screen appears, then press **[OK]**.
8. Record the alarm message.

Report Types

There are four report types that can be used with Utility Reporting.

- *Disarm with user*: The Magellan console calls the user when specific users disarm the system.
- *System troubles*: The Magellan console calls the user when specific troubles appear.
- *Paramedic alarm*: The Magellan console calls the user when specific users require emergency assistance and press the appropriate key on their remote controls.
- *Zone activation*: The Magellan console calls the user when a specific zone is breached or opened.

Refer to the *Magellan User Guide* for more information on using this feature.

Console Account Number

Section [107]

All report codes are preceded by a 4-digit or 3-digit Console Account Number to ensure correct identification of the Magellan console. The Console account number can be any hexa-digit from 1 to F. To enter a 3-digit account number, simply press the **[1]** key from the center keypad, followed by the 3-digit account number. Also, when using 3-digit account numbers, you must use 1-digit report codes.

Reporting Formats

Section [105] = Reporting format for MSTN 1
Section [106] = Reporting format for MSTN 2

The reporting formats apply only to the MSTNs (Monitoring Station Telephone Numbers) programmed in sections [111] and [112] (page 27)

The Magellan console can use a number of different reporting formats and each monitoring station telephone number can be programmed with a different reporting format. The three digits entered into section [105] represent the reporting format used to communicate with Monitoring Station Telephone Number 1 while the three digits entered into section [106] represent the reporting format used to communicate with Monitoring Station Telephone Number 2.

Table 10: Reporting Formats

3-digit Value	Reporting Format
001	Ademco slow (1400Hz, 1900Hz, 10BPS)
002	Silent Knight Fast (1400Hz, 1900Hz, 10BPS)
003	SESCOA (2300Hz, 1800Hz, 20BPS)
004	Ademco Contact ID
005	SIA FSK

UL Note: The installer is required to verify the complete compatibility of the DAC Receiver and formats at least once per year.

Standard Pulse Formats

The Magellan console can use the Ademco slow, Silent Knight and SESCOA standard pulse reporting formats (see Table 10 on page 28).

Ademco Contact ID

Ademco Contact ID is a fast communicator format that uses tone reporting instead of pulse reporting. This communicator format also uses a pre-defined list of industry standard messages and report codes that will suit most of your basic installation needs.

- To manually program the report codes, use the 2-digit hexadecimal values from Appendix 2: Ademco Contact ID Report Code List on page 37.
- Enter 00 to disable reporting or FF to use the default report code from Appendix 1: Automatic Report Code List on page 35.

SIA FSK

SIA FSK is a fast communicator format that uses tone reporting instead of pulse reporting. This communicator format uses a pre-defined list of industry standard messages and report codes that will suit most basic installation needs.

Please refer to Appendix 1: Automatic Report Code List on page 35 for a complete list of the format's pre-defined industry standard messages and report codes.

Event Call Direction

Section [100]: Options [1] to [3]; Arming/Disarming
Option [1] ON = Call MSTN 1
Option [2] ON = Call MSTN 2
Option [3] ON = Call Pager telephone number

Section [100]: Options [5] to [7]; Alarm/Alarm Restore
Option [5] ON = Call MSTN 1
Option [6] ON = Call MSTN 2
Option [7] ON = Call Pager telephone number

Section [101]: Options [1] to [3]; Tamper/Tamper Restore
Option [1] ON = Call MSTN 1
Option [2] ON = Call MSTN 2
Option [3] ON = Call Pager telephone number

Section [101]: Options [5] to [7]; Trouble/Trouble Restore
Option [5] ON = Call MSTN 1
Option [6] ON = Call MSTN 2
Option [7] ON = Call Pager telephone number

Section [102]: Options [1] to [3]; Special
Option [1] ON = Call MSTN 1
Option [2] ON = Call MSTN 2
Option [3] ON = Call Pager telephone number

The events are divided into five groups (see above) where each event group can be programmed to dial up to three telephone numbers (MSTN 1 & 2 and the Pager telephone number) with one as a possible backup (see MSTN 2 as Backup Number on page 27).

- When a reportable event occurs in the system, the Magellan console will begin dialing the numbers sequentially starting from MSTN 1 (if enabled), skipping any disabled numbers and stopping once all selected telephone numbers have been called.
- After eight failed attempts at trying to call the monitoring station, the console will then dial the selected backup telephone number (if enabled; see MSTN 2 as Backup Number on page 27).
- If the Alternate Dial option (see page 29) is enabled, the console will dial the programmed backup telephone number (if enabled, see MSTN 2 as Backup Number on page 27) after every failed attempt.
- If no backup telephone number is programmed or section [099] option [1] is disabled (OFF, see page 29), the console will never report to the backup telephone number.

For more information, please refer to Monitoring Station Telephone Numbers (MSTNs) on page 27, Alternate Dial Option on page 29, MSTN 2 as Backup Number on page 27 and Delay Between Dialing Attempts on page 29.

Example: The system is armed and zone 1 has been breached causing an alarm. If options [5] and [7] are OFF and option [6] is ON in section [100], the console will attempt to communicate with MSTN 2 in order to transmit the Zone 1 Alarm Report Code programmed in section [131].

Delay Between Dialing Attempts

Section [076]: 001 to 255 seconds; 000 = disabled; Default = 20 seconds

This delay determines the amount of time the Magellan console will wait between each dialing attempt.

Alternate Dial Option

Section [098]: Option [5]
Option [5] OFF = Alternate dial disabled (default)
Option [5] ON = Alternate dial enabled

With option [5] OFF, the Magellan console will dial the programmed backup telephone number MSTN 2 (see MSTN 2 as Backup Number on page 27) only after all attempts to call MSTN 1 have failed. With option [5] ON, the console will dial the backup telephone number after every failed attempt.

Force Dial Option

Section [098]: Option [6]
Option [6] OFF = Force dial disabled (default)
Option [6] ON = Force dial enabled

When option [6] is enabled, the Magellan console will dial a telephone number even if no dial tone is present after 3 seconds.

Dialing Method

Section [098]: Option [7]
Option [7] OFF = Pulse dialing
Option [7] ON = Tone / DTMF dialing (default)

When option [4] is ON, the Magellan console is set for Tone/DTMF dialing. When option [4] is OFF, the console is set for pulse dialing. Refer to Pulse Ratio on page 29 for information on setting the pulse ratio.

Pulse Ratio

Section [098]: Option [8]
Option [8] OFF = European Pulse Ratio of 1:2
Option [8] ON = U.S.A. Pulse Ratio of 1:1.5 (default)

When using Pulse dialing, you can select one of two Pulse Ratios. Although most European countries use the 1:2 pulse ratio, the 1:1.5 ratio may provide better results in some cases. The same applies for North American countries. If the 1:1.5 pulse ratio is not providing the desired results, the 1:2 ratio may be used.

Switch to Pulse Dialing on 5th Attempt

Section [098]: Option [3]
Option [3] OFF = Switch to pulse dialing on fifth attempt disabled (default)
Option [3] ON = Switch to pulse dialing on fifth attempt enabled

When section [098] option [3] is ON, the Magellan console switches from tone/DTMF dialing to pulse dialing on the fifth attempt to report events to the monitoring station. The console continues to use pulse dialing until it establishes communication. When the console switches to another MSTN, it returns to tone/DTMF dialing and will once again switch to pulse dialing on the fifth attempt.

Telephone Line Monitoring (TLM)

Section [098]: Options [1] and [2]

When enabled, the system verifies the existence of a telephone line once every second. A line test failure occurs when the TLM detects less than a certain voltage for the period defined by the TLM Fail Timer (see page 30). If the line test fails, the Magellan console generates one or more conditions as defined by the TLM settings below. These will be restored when the console detects the telephone line again.

Table 11: Telephone Line Monitoring Options

Options [1]	Options [2]	Description
OFF	OFF	TLM disabled (default)
OFF	ON	*Trouble only:* Upon a line test failure, a TLM trouble will appear in the console's Trouble Display.
ON	OFF	*Alarm if System Armed:* Upon a line test failure, a TLM trouble will appear in the console's Trouble Display and if the system is armed, the console will generate an alarm.
ON	ON	*Silent Alarm becomes Audible:* Upon a line test failure, a TLM trouble will appear in the console's Trouble Display and causes a silent zone or silent panic alarm to switch to audible.

Please note that when the dialer detects an incoming call, the TLM test will stop for 1 minute.

TLM Fail Timer

Section [073]: 001 to 255 seconds; 000 = Disabled; Default = 32 seconds

If TLM does not detect the existence of a telephone line for the duration of this period, the control panel will generate the condition(s) defined by the TLM options (see Telephone Line Monitoring (TLM) on page 29).

Recent Close Delay

Section [066]: 001 to 255 seconds; 000 = Disabled; Default = Disabled

If after having armed the system, an alarm is generated within the period defined by the Recent Close Delay, the Magellan console will attempt to transmit the Recent Close report code programmed in section [139] (page 25).

Auto-Test Report

Section [071]: 001 to 255 days; 000 = Disabled; Default = Disabled
Section [084]: Time (HH:MM)

The Magellan console will transmit the Test Report report code programmed into section [153] after the number of days programmed into section [071] has elapsed at the time programmed into section [084]. Use the 24-hour clock to program the time (i.e. 6:30PM = 18:30). The first Test Report will be transmitted within 24 hours after the feature is enabled at the time programmed in [084].

Example: Section [071] = 005 and section [084] = 13:00. The first Test Report will be sent at 1 PM that day and then the report will be sent every 5 days at 1 PM.

Power Failure Report Delay

Section [070]: 001 to 255 minutes; 000 = Disabled; Default = 15 minutes

The Magellan console will transmit the AC Failure report code programmed in section [149] after the Power Failure Report Delay period has elapsed.

Disarm Reporting Options

Section [093]: Option [5]
Option [5] OFF = Always report disarming
Option [5] ON = Report disarming only after alarm (default)

With option [5] OFF, the Magellan console will send the Disarming report codes (see page 25) to the monitoring station every time the system is disarmed. With option [5] ON, the console will send the Disarming report codes to the monitoring station when the system is disarmed following an alarm.

Zone Restore Report Options

Section [094]: Option [2]
Option [2] OFF = Report on Bell Cut-Off (default)
Option [2] ON = Report on zone closure

With option [2] OFF, the Magellan console will send the Zone Alarm Restore report codes (see page 25) to the monitoring station when the zone has returned to normal and the Bell Cut-Off Timer (see page 23) has elapsed. With option [2] ON, the console will send the Zone Alarm Restore report codes to the monitoring station as soon as the zone returns to normal or when the system is disarmed.

RF Interference Detection

Section [096]: Option [8]
Option [8] OFF = RF Interference Detection disabled (default)
Option [8] ON = RF Interference Detection enabled

With option [8] ON, a trouble will be generated when the Magellan console's RF signal is jammed or encounters interference for a minimum of 10 seconds.

Programmable Outputs

A PGM is a programmable output that toggles to its opposite state (i.e. a normally open PGM will close) when a specific event has occurred in the system. For example, a PGM can be used to activate bells or strobe lights, open/close garage doors and much more. When a PGM activates, the control panel triggers any device or relay connected to it.

PGM Activation Event

Section [086] = PGM1 Activation Event
Section [088] = PGM2 Activation Event

This feature allows you to program the Magellan console to activate a PGM when a specific event occurs in the system. The PGM will remain in its active state until the programmed PGM Deactivation Event (see page 31) occurs or when the PGM Delay (see page 31) elapses. To program a PGM Activation Event:

1. Enter the section that corresponds to the desired PGM; PGM1 = [086], PGM2 = [088].
2. Enter the **[EVENT GROUP #]**.
3. Enter the **[SUB-GROUP #]**.

The AC Loss PGM event (Event Group #28, Event Sub-group #01) will only occur after the Power Failure Report Delay elapses (see page 30).

For the Event List, see the PGM Table in the *Magellan Programming Guide.*

PGM Deactivation Event

Section [087] = PGM1
Section [089] = PGM2

After PGM activation (see PGM Activation Event on page 31), the PGM will return to its normal state (deactivate) when the programmed PGM Deactivation Event occurs. To program a Deactivation Event:

1. Enter section that represents the desired PGM; PGM1 = [087], PGM2 = [089].
2. Enter the **[EVENT GROUP #]**.
3. Enter the **[SUB-GROUP #]**.

A PGM can also be set to deactivate after a programmed period elapses (see PGM Delay on page 31). If using the PGM Delay, sections [087] and [089] can be used as a second PGM Activation Event.

For the complete Event List, see the PGM Table in the *Magellan Programming Guide.*

PGM Delay

Section [068] = PGM1, Section [069] = PGM2
001 to 255 seconds; 000 = Follow Deactivation Event;
Default = 5 seconds

Instead of deactivating the PGM on the occurrence of a specific event, the PGM will deactivate after the period programmed in here has elapsed. Enter 000 to have the PGMs deactivate with a PGM Deactivation Event (see page 31).

If a PGM Delay is programmed, the PGM Deactivation Event can be used as a second PGM Activation Event.

PGM Normal State

Section [090]: Options [7] (PGM1) and [8] (PGM2)
Option [7] OFF = PGM1 Normally Open (default)
Option [7] ON = PGM1 Normally Closed

Option [8] OFF = PGM2 Normally Open (default)
Option [8] ON = PGM2 Normally Closed

A PGM toggles to its opposite state (i.e. a normally open PGM will close) when a specific event has occurred in the system. You can program each PGM output to be normally open (N.O.) or normally closed (N.C.) by enabling or disabling options [7] and [8] in section [090].

PGM X10 Option

Section [091]: Options [7] (PGM1) and [8] (PGM2)
Option [7] OFF = PGM1 used as programmable output (default)
Option [7] ON = PGM1 used as X10 output 7

Option [8] OFF = PGM2 used as programmable output (default)
Option [8] ON = PGM2 used as X10 output 8

With section [091] options [7] and [8] enabled (ON), PGMs 1 and 2 will follow the ON/OFF state of X10 outputs 7 and 8. Therefore the PGMs will function as follows:

- When X10 output 7 is enabled, PGM1 will activate. When X10 output 7 is disabled, PGM1 will deactivate.
- When X10 output 8 is enabled, PGM2 will activate. When X10 output 8 is disabled, PGM2 will deactivate.

When section [091] options [7] and [8] are enabled, the PGM outputs will disregard their PGM activation and deactivation events (sections [086] to [089]).

System Settings

Software Reset

Section [201]

Performing a software reset will reset all programmed sections back to the factory defaults. To perform a software reset:

1. Access the installer programming mode (see page 11).
2. Enter section [201].

*You can also perform a software reset by removing power to the console, pressing and holding down the **[*]** and **[#]** keys and then reapplying power to the console.*

Installer Lock

Section [180]: 000 = Disabled; 147 = Lock Enabled;
Default = Disabled

Program 147 into section [180] to lock all programming. Performing a hardware reset will not affect the current console settings. To remove the Installer Lock, enter **000**.

Console Tamper Supervision

Section [090]: Option [5]
Option [5] OFF = Console Tamper Supervision disabled (default)
Option [5] ON = Console Tamper Supervision enabled

Magellan can be programmed to monitor its on-board tamper status. The console will follow its programmed Tamper Recognition options. Refer to Tamper Recognition Options on page 23 for more information.

Console Audible Trouble Warning

Section [090]: Option [2]
Option [2] OFF = Console beep on trouble disabled (default)
Option [2] ON = Console beep on trouble enabled

When enabled, the console emits an intermittent beep tone whenever a trouble condition occurs in the system. The intermittent beep tone remains activated until the user enters the Trouble Display by pressing the left **[ACTION]** key (**i**). The intermittent beeps will re-initialize whenever a new trouble occurs or the trouble restores and re-occurs.

The only trouble not covered by this feature is the AC Power Failure trouble. See AC Power Failure Warning on page 32.

FM Tuner Option

Section [093]: Option [8]
Option [8] OFF = FM tuner is disabled when the system is armed (default)
Option [8] ON = FM tuner is enabled when system is armed

With section [093] option [8] ON, the Magellan's radio is turned ON automatically after the system is armed (after the Exit Delay Timer has elapsed).

Daylight Savings Time

Section [096]: Option [5]
Option [5] OFF = Daylight Savings Time disabled (default)
Option [5] ON = Daylight Savings Time enabled

With section [096] option [5] ON, Magellan adjusts the system's clock (time) for daylight savings changes. At 2:00AM on the first Sunday of a full weekend in April, the console will add one hour to the programmed time (clock). At 2:00 AM on the last Sunday of a full weekend in October, the console will subtract one hour from the programmed time (clock).

AC Power Failure Warning

Section [096]: Option [6]
Option [6] OFF = AC Power Failure Warning disabled (default)
Option [6] ON = AC Power Failure Warning enabled

With this feature enabled, the console emits an intermittent beep tone whenever an AC power failure is detected. The intermittent beep tone remains activated until the user enters the Trouble Display by pressing the left **[ACTION]** key (**i**). The intermittent beeps will re-initialize whenever the trouble occurs or the trouble restores and re-occurs.

The Trouble Display

When the system experiences problems or is tampered with, the Information symbol (i) will appear on the LCD screen and the (i) light will illuminate. The potential troubles that the Magellan system can experience are listed below. To access the Trouble Display:

1. Press the i key.
2. Use the **[NEXT]** key to scroll through the displayed troubles.
3. Press the **[OK]** key to view details on the desired trouble.

Trouble	Description
Bypass	There is a zone (or zones) that is bypassed in the system.
Alarm Memory	An alarm has occurred in the system. The zones displayed went into alarm.
Console Low Bat	The backup battery pack is disconnected or needs to be recharged or replaced.
Doorbell Low Bat	Wireless transmitter being used as a doorbell (see page 17) requires its batteries changed.
Zone Low Battery	Zone(s) displayed indicate(s) where a wireless transmitter's battery needs to be replaced.
Clock Loss	The time and date were reset to default. To reprogram: 1. Press the **[12HRS]** key to display the time using the 12-hour clock or the **[24HRS]** key to display the time using the 24-hour clock. 2. Enter the desired time and then press **[OK]**. 3. Enter the date and then press **[OK]**.
AC Failure	Power failure detected. The system is running on the backup battery pack.

Trouble	Description
Supervision Trouble	Zone(s) displayed has/have not sent a check-in signal within the programmed interval (see page 23).
Console Tamper	The Magellan console was tampered with.
Zone Tamper	Zone(s) displayed was/were tampered with.
Fail to Communicate with Central*	The Magellan console has failed to contact the monitoring station.
Fail to Communicate with Voice Reporting*	The Magellan console has failed to contact telephone number programmed for Voice reporting.
Fail to Communicate to Pager*	The Magellan console has failed to contact telephone number programmed for Pager reporting.
Fail to Communicate with PC*	The Magellan console is unable to communicate with the WinLoad software.
Fail to Communicate with Voice Utility*	The Magellan console has failed to contact telephone number programmed for Voice Utility reporting.

* When a communication failure trouble is acknowledged by pressing **[OK]**, you will be given the option to call your service provider. See Service Telephone Number on page 27.

WinLoad Software Settings

Panel Answer Options

The following two options define how Magellan answers an incoming call from a computer using the WinLoad Installer Upload/Download Software.

Answering Machine Override

Section [074]: 010 to 255 seconds; 000 = disabled; Default = disabled

When using WinLoad to communicate remotely with an installation site that uses an answering machine or service, the answering machine override must be programmed. Using WinLoad, you will call Magellan, hang up, then call back. If the installation site is called back within the delay programmed in section [074], the console will override the answering machine or service by picking up the line after the first ring on the second call. You must wait at least 10 seconds before attempting the second call, otherwise, the console will think it is the same call.

For details on how to use WinLoad, refer to the *WinLoad On-line Help*.

Example: A security installation is using an answering machine set to answer after three rings. If section [074] has been programmed with 040 (40 seconds) and the second call is made within 40 seconds, Magellan will pick up the line on the first ring. If it takes more than 40 seconds, the console will not answer on the first ring and the answering machine will answer after three rings.

Number of Rings

Section [072]: 001 to 015 rings; 000 = disabled; Default = 008

This value represents the number of rings Magellan will wait before picking-up the line. If the line is not answered after the number of programmed rings, the console will answer the call. You must wait at least 10 seconds before attempting the second call or Magellan will think it is the same call.

Panel Identifier

Section [108]: 4-digit Hexadecimal number from 0000 to FFFF

This 4-digit code identifies the console to WinLoad before initiating communication. Magellan will verify that the Panel Identifier in the WinLoad software is the same as the code programmed in section [108]. If the codes do not match, the console will not establish communication. Therefore, be sure to program the same panel identifier code into both Magellan and WinLoad.

PC Password

Section [109]: 4-digit Hexadecimal number from 0000 to FFFF

This 4-digit password identifies the PC to Magellan before establishing communication. Program the same PC password into both the console and WinLoad. If the passwords do not match, WinLoad will not establish communication.

PC Telephone Number

Section [118]

Magellan will dial the number programmed in section [118] when trying to initiate communication with a computer using WinLoad. You can enter any digit from 0 to 9 and any special keys or functions (see Table 9 on page 26) up to a maximum of 32 digits.

Call Back Feature

Section [098]: Option [4]
Option [4] OFF = Call Back Feature disabled (default)
Option [4] ON = Call Back Feature enabled

The Call Back feature provides additional security. When section [098] option [4] in ON and a computer using WinLoad attempts to communicate with Magellan, the console hangs up and calls the computer back to re-verify identification codes and re-establish communication. When Magellan hangs up, WinLoad automatically goes into Wait for Call mode, ready to answer when the console calls back. The PC Telephone number must be programmed (see PC Telephone Number on page 34).

Appendix 1: Automatic Report Code List

System Event	Default Contact ID Report Code when using sections [790] to [795]	Default SIA Report Code when using sections [790] to [795]
Arming with Master Code (##)	3 4A1 - Close by user	CL - Closing Report
Arming with User Code (##)	3 4A1 - Close by user	CL - Closing Report
Arming with Keyswitch (##)	3 4A9 - Keyswitch Close	CS - Closing Keyswitch
Auto Arming	3 4A3 - Automatic Close	CA - Automatic Closing
Arm with PC software	3 4A7 - Remote arm/disarm	CL - Closing Report
Late To Close	3 4A4 - Late to Close	OT - Late to Close
No Movement	3 4A4 - Late to Close	NA - No Activity
Partial arming	1 574 - Group bypass	CG - Close Area
Quick arming	3 408 - Quick arm	CL - Closing Report
Closing Delinquency	1 654 - System Inactivity	CD - System Inactivity
Disarm with Master Code (##)	1 4A1 - Open by user	OP - Opening Report
Disarm with User Code (##)	1 4A1 - Open by user	OP - Opening Report
Disarm with Keyswitch (##)	1 4A9 - Keyswitch Open	OS - Opening Keyswitch
Disarm after alarm* with Master Code (##)	1 4A1 - Open by user	OP - Opening Report
Disarm after alarm* with User Code (##)	1 4A1 - Open by user	OP - Opening Report
Disarm after alarm* with Keyswitch (##)	1 4A1 - Keyswitch Open	OS - Opening Keyswitch
Cancel alarm** with Master Code (##)	1 4A6 - Open by user	OR - Disarm from Alarm
Cancel alarm** with User Code (##)	1 4A6 - Open by user	OR - Disarm from Alarm
Cancel alarm** with Keyswitch (##)	1 4A6 - Keyswitch Open	OS - Opening Keyswitch
Auto Arming Cancellation	1 4A5 - Deferred Open/Close	CE - Closing Extend
Disarm with PC software	1 4A7 - Remote arm/disarm	OP - Opening Report
Disarm after an alarm with PC software	1 4A7 - Remote arm/disarm	OR - Disarm From Alarm
Quick disarm	1 408 - Quick disarm	OP - Opening Report
Zone Bypassed (##)	1 57A - Zone bypass	UB - Untyped Zone Bypass
Zone alarm (##)	1 13A - Burglary Alarm	BA - Burglary Alarm
Fire alarm (##)	1 11A - Fire alarm	FA - Fire Alarm
Zone alarm restore (##)	3 13A - Burglary Alarm Restore	BH - Burglary Alarm Restore
Fire alarm restore (##)	3 11A - Fire alarm Restore	FH - Fire Alarm Restore
Panic 1 - Emergency	1 12A - Panic alarm	PA - Panic Alarm
Panic 2 - Medical	1 1AA - Medical alarm	MA - Medical Alarm
Panic 3 - Fire	1 115 - Pull Station	FA - Fire Alarm
Recent closing	3 4AA - Open/Close	CR - Recent Closing
Global zone shutdown	1 574 - Group bypass	CG - Close Area
Duress alarm	1 121 - Duress	HA - Hold-up Alarm
Zone shutdown (##)	1 57A - Zone bypass	UB - Untyped Zone Bypass
Zone tampered (##)	1 144 - Sensor tamper	TA - Tamper Alarm
Zone tamper restore (##)	3 144 - Sensor tamper restore	TR - Tamper Restoral
Keypad Lockout	1 421 - Access denied	JA - User Code Tamper

* An armed system is or was in alarm and was disarmed by a user.
** A disarmed system is or was in alarm (e.g. 24Hr. zone) and was disarmed by a user.

System Event	Default Contact ID Report Code when using sections [790] to [795]	Default SIA Report Code when using sections [790] to [795]
AC Failure	1 3A1 - AC loss	AT - AC Trouble
Battery Failure	1 3A9 - Battery test failure	YT - System Battery Trouble
Auxiliary supply trouble	1 3AA - System trouble	YP - Power Supply Trouble
Bell output current limit	1 321 - Bell 1	YA - Bell Fault
Bell absent	1 321 - Bell 1	YA - Bell Fault
Clock lost	1 626 - Time/Date inaccurate	JT - Time Changed
Fire loop trouble	1 373 - Fire trouble	FT - Fire Trouble
TLM trouble restore	3 351 - Telco 1 fault restore	LR - Phone Line restoral
AC Failure restore	3 3A1 - AC loss restore	AR - AC Restoral
Battery Failure restore	3 3A9 - Battery test restore	YR - System Battery Restoral
Auxiliary supply trouble restore	3 3AA - System trouble restore	YQ - Power Supply restored
Bell output current limit restore	3 321 - Bell 1 restore	YH - Bell Restored
Bell absent restore	3 321 - Bell 1 restore	YH - Bell Restored
Clock programmed	3 625 - Time/Date Reset	JT - Time Changed
Fire loop trouble restore	3 373 - Fire trouble restore	FJ - Fire Trouble Restore
Combus fault	1 333 - Expansion module failure	ET - Expansion Trouble
Module tamper	1 145 - Expansion module tamper	TA - Tamper Alarm
Module ROM_RAM_error	1 3A4 - Rom checksum bad	YF - Parameter Checksum Fail
Module TLM trouble	1 352 - Telco 2 fault	LT - Phone Line trouble
Module fail to communicate to monitoring station.	1 354 - Fail to communicate	YC - Communication Fails
Printer fault	1 336 - Local printer failure	VT - Printer Trouble
Module AC Failure	1 3A1 - AC loss	AT - AC Trouble
Module battery failure	1 3A9 - Battery test failure	YT - System Battery Trouble
Module Auxiliary supply trouble	1 3AA - System trouble	YP - Power Supply Trouble
Bus fault restore	3 333 - Expansion module failure restore	ER - Expansion Restoral
Module tamper restore	3 145 - Expansion module tamper restore	TR - Tamper Restoral
Module ROM_RAM_error restore	3 3A4 - Rom checksum bad restore	YG - Parameter Changed
Module TLM restore	3 352 - Telco 2 fault restore	LR - Phone Line Restoral
Printer fault restore	3 336 - Local printer failure restore	VR - Printer Restore
Module AC restore	3 3A1 - AC loss restore	AR - AC Restoral
Module battery restore	3 3A9 - Battery test failure restore	YR - System Battery Restoral
Module Auxiliary supply restore	3 3AA - System trouble restore	YQ - Power Supply Restored
Fail to communicate with monitoring station	1 354 - Fail to communicate	YC - Communication Fails
Module RF low battery	1 384 - RF transmitter low battery	XT - Transmitter Battery Trouble
Module RF battery restore	3 384 - RF transmitter battery restore	XR - Transmitter Battery Restoral
Module RF supervision trouble	1 381 - Loss of supervision - RF	US - Untype Zone Supervision
Module RF supervision restore	3 381 - Supervision restore - RF	UR - Untyped Zone Restoral
Cold Start	1 3A8 - System shutdown	RR - Power Up
Warm Start	1 3A5 - System reset	YW - Watchdog Reset
Test Report engaged	1 6A2 - Periodic test report	TX - Test Report
PC software communication finished	1 412 - Successful - download access	RS - Remote Program Success
Installer on site	1 627 - Program mode Entry	LB - Local Program
Installer programming finished	1 628 - Program mode Exit	LS - Local Program Success

Appendix 2: Ademco Contact ID Report Code List

CID#	Reporting Code	Programming Value
Medical Alarms - 100		
100	Medical alarm	**01**
101	Pendant transmitter	**02**
102	Fail to report in	**03**
Fire Alarms - 110		
110	Fire alarm	**04**
111	Smoke	**05**
112	Combustion	**06**
113	Water flow	**07**
114	Heat	**08**
115	Pull station	**09**
116	Duct	**0A**
117	Flame	**0B**
118	Near alarm	**0C**
Panic Alarms - 120		
120	Panic alarm	**0D**
121	Duress	**0E**
122	Silent	**0F**
123	Audible	**10**
124	Duress - Access granted	**11**
125	Duress - Egress granted	**12**
Burglar Alarms - 130		
130	Burglary	**13**
131	Perimeter	**14**
132	Interior	**15**
133	24-hour	**16**
134	Entry/Exit	**17**
135	Day/Night	**18**
136	Outdoor	**19**
137	Tamper	**1A**
138	Near alarm	**1B**
139	Intrusion verified	**1C**
General Alarms - 140		
140	General alarm	**1D**
141	Polling loop open	**1E**
142	Polling loop short	**1F**
143	Expansion module failure	**20**
144	Sensor tamper	**21**
145	Expansion module tamper	**22**
146	Silent burglary	**23**
147	Sensor supervision failure	**24**
24-hour Non-burglary - 150 and 160		
150	24-hour non-burglary	**25**
151	Gas detected	**26**
152	Refrigeration	**27**
153	Loss of heat	**28**

CID#	Reporting Code	Programming Value
154	Water leakage	**29**
155	Foil break	**2A**
156	Day trouble	**2B**
157	Low bottled gas level	**2C**
158	High temperature	**2D**
159	Low temperature	**2E**
161	Loss of air flow	**2F**
162	Carbon monoxide detected	**30**
163	Tank level	**31**
Fire Supervisory - 200 and 210		
200	Fire supervisory	**32**
201	Low water pressure	**33**
202	Low CO_2	**34**
203	Gate valve sensor	**35**
204	Low water level	**36**
205	Pump activated	**37**
206	Pump failure	**38**
System Troubles - 300 and 310		
300	System trouble	**39**
301	AC loss	**3A**
302	Low system battery	**3B**
303	RAM checksum bad	**3C**
304	ROM checksum	**3D**
305	System reset	**3E**
306	Panel program changed	**3F**
307	Self-test failure	**40**
308	System shutdown	**41**
309	Battery test failure	**42**
310	Ground fault	**43**
311	Battery missing/dead	**44**
312	Power supply over current limit	**45**
313	Engineer reset	**46**
Sounder/Relay Troubles - 320		
320	Sounder/relay	**47**
321	Bell 1	**48**
322	Bell 2	**49**
323	Alarm relay	**4A**
324	Trouble relay	**4B**
325	Reversing relay	**4C**
326	Notification appliance chk. #3	**4D**
327	Notification appliance chk. #4	**4E**
System Peripheral Troubles - 330 and 340		
330	System peripheral	**4F**
331	Polling loop open	**50**
332	Polling loop short	**51**
333	Expansion module failure	**52**
334	Repeater failure	**53**

CID#	Reporting Code	Programming Value
335	Local printer paper out	**54**
336	Local printer failure	**55**
337	Expansion module DC loss	**56**
338	Expansion module low battery	**57**
339	Expansion module reset	**58**
341	Expansion module tamper	**59**
342	Expansion module AC loss	**5A**
343	Expansion module self-test fail	**5B**
344	RF receiver jam detect	**5C**
Communication Troubles - 350 and 360		
350	Communication	**5D**
351	Telco 1 fault	**5E**
352	Telco 2 fault	**5F**
353	Long range radio	**60**
354	Fail to communicate	**61**
355	Loss of radio supervision	**62**
356	Loss of central polling	**63**
357	Long range radio VSWR problem	**64**
Protection Loop Troubles - 370		
370	Protection loop	**65**
371	Protection loop open	**66**
372	Protection loop short	**67**
373	Fire trouble	**68**
374	Exit error alarm	**69**
375	Panic zone trouble	**6A**
376	Hold-up zone trouble	**6B**
377	Swinger trouble	**6C**
378	Cross-zone trouble	**6D**
Sensor Troubles - 380 and 390		
380	Sensor trouble	**6E**
381	Loss of supervision - RF	**6F**
382	Loss of supervision - RPM	**70**
383	Sensor tamper	**71**
384	RF transmitter low battery	**72**
385	Smoke detector Hi sensitivity	**73**
386	Smoke detector Low sensitivity	**74**
387	Intrusion detector Hi sensitivity	**75**
388	Intrusion detector Low sensitivity	**76**
389	Sensor self-test failure	**77**
391	Sensor watch trouble	**78**
392	Drift compensation error	**79**
393	Maintenance alert	**7A**
Open/Close - 400		
400	Open/Close	**7B**
401	Open/Close by user	**7C**
402	Group open/close	**7D**
403	Automatic open/close	**7E**
406	Cancel	**7F**
407	Remote arm/disarm	**80**

CID#	Reporting Code	Programming Value
408	Quick arm	**81**
409	Keyswitch open/close	**82**
Remote Access - 410		
411	Call back request made	**83**
412	Success - download access	**84**
413	Unsuccessful access	**85**
414	System shutdown	**86**
415	Dialer shutdown	**87**
416	Successful upload	**88**
Access Control - 420 and 430		
421	Access denied	**89**
422	Access report by user	**8A**
423	Forced access	**8B**
424	Egress denied	**8C**
425	Egress granted	**8D**
426	Access door propped open	**8E**
427	Access point door status monitor trouble	**8F**
428	Access point request to exit	**90**
429	Access program mode entry	**91**
430	Access program mode exit	**92**
431	Access threat level change	**93**
432	Access relay/trigger fail	**94**
433	Access RTE shunt	**95**
434	Access DSM shunt	**96**
Arming - 440 and 450		
441	Armed Stay	**97**
442	Keyswitch armed Stay	**98**
450	Exception open/close	**99**
451	Early open/close	**9A**
452	Late open/close	**9B**
453	Failed to open	**9C**
454	Failed to close	**9D**
455	Auto-arm failed	**9E**
456	Partial arm	**9F**
457	Exit error (user)	**A0**
458	User on premises	**A1**
459	Recent close	**A2**
System - 460		
461	Wrong code entry	**A3**
462	Legal code entry	**A4**
463	Re-arm after alarm	**A5**
464	Auto-arm time extended	**A6**
465	Panic alarm reset	**A7**
466	Service on/off premises	**A8**
Sounder Relay Disabled - 520		
520	Sounder/Relay disabled	**A9**
521	Bell 1 disabled	**AA**
522	Bell 2 disabled	**AB**
523	Alarm relay disabled	**AC**
524	Trouble relay disabled	**AD**

CID#	Reporting Code	Programming Value
525	Reversing relay disabled	**AE**
526	Notification appliance chk. #3 disabled	**AF**
527	Notification appliance chk. #4 disabled	**B0**
Modules - 530		
531	Module added	**B1**
532	Module removed	**B2**
Communication Disables - 550 and 560		
551	Dialer disabled	**B3**
552	Radio transmitter disabled	**B4**
Bypasses - 570		
570	Zone bypass	**B5**
571	Fire bypass	**B6**
572	24Hr. zone bypass	**B7**
573	Burglary bypass	**B8**
574	Group bypass	**B9**
575	Swinger bypass	**BA**
576	Access zone shunt	**BB**
577	Access point bypass	**BC**
Test/Misc. - 600		
601	Manual trigger test	**BD**
602	Periodic test report	**BE**
603	Periodic RF transmission	**BF**
604	Fire test	**C0**
605	Status report to follow	**C1**
606	Listen-in to follow	**C2**
607	Walk test mode	**C3**
608	Periodic test - system trouble present	**C4**
609	Video transmitter active	**C5**
611	Point test OK	**C6**
612	Point not tested	**C7**
613	Intrusion zone walk tested	**C8**
614	Fire zone walk tested	**C9**
615	Panic zone walk tested	**CA**
616	Service request	**CB**
621	Event log reset	**CC**
622	Event log 50% full	**CD**
623	Event log 90% full	**CE**
624	Event log overflow	**CF**
625	Time/Date reset	**D0**
626	Time/Date inaccurate	**D1**
627	Program mode entry	**D2**
628	Program mode exit	**D3**
629	32-hour event log marker	**D4**
630	Schedule change	**D5**
631	Exception schedule change	**D6**
632	Access schedule change	**D7**
654	System inactivity	**D8**

Index

Numerics

001 to 016 13–16
021 to 036 17
058 17
059 17
060 13
061 13
062 22
063 23
064 21
065 16
066 30
067 15
068 31
069 31
070 30
071 30
072 34
073 30
074 34
075 16
076 29
078 24
079 27
080 22
084 30
085 21
086 31
087 31
088 31
089 31
090 ....12, 31, 32
091 ....24, 31
092 ....21, 22
093 ....22, 30, 32
094 .... 16, 23, 24, 30
095 ....8, 16, 22
096 .... 17, 23, 30, 32
098 ....29, 34
099 ....27, 29
100 28
101 28
102 29
103 23
104 23
105 28
106 28
107 28
108 34
109 34
111 27
112 27
113 27
114 27
118 34
119 27
120 to 123 25
124 .... 21, 25
125 25
126 to 129 25
130 25
131 to 134 25
135 to 138 25
139 25
140 .... 12, 25, 26
141 to 144 26
145 to 148 26
149 26
150 26
151 26
153 26
154 26
155 26
156 26
161 to 176 18
180 32
181 12
182 12
187 14
190 14
200 12
201 32
24Hr. zone types
24Hr. Burglary Zones 14
24Hr. Buzzer Zones 14
24Hr. Freeze Zones 15
24Hr. Gas Zones 15
24Hr. Heat Zones 15
24Hr. Hold-up Zones 14
24Hr. Water Zones 15
Standard 24Hr. Fire Zones 14

A

AC failure report code 30
AC power 6
AC power failure warning 32
Account number 28
Activation event 31
Adding a zone 4
Ademco Contact ID 28
Ademco slow 28
Alarm options
Bell Cut-off timer 23
Check-in Supervision 23
Panic alarms 24
Tamper Recognition options 23
Wireless Transmitter Supervision options 23
Alarm types 15
Alternate dial options 29
Answer options, Panel 34
Answering machine override 34

Arming options
Auto-arm options 21
Bell Squawk on Arm/Disarm with Remote Control 22
Closing Delinquency Timer 22
Exit delay 22
Exit Delay Termination 22
Follow Zone switches to Entry Delay 2 22
No Exit Delay when Arming with Remote Control 22
No Movement Auto-arming 21
One-touch arming 22
Regular Arming switches to Force Arming 21
Regular Arming switches to Stay Arming 21
Stay Arm Siren Delay 22
Stay Arming switches to Force Arming 21
Timed Auto-arming 21
Arming report codes 25
Assigning remote controls 18
Assigning wireless doorbells 17
Assigning wireless zones 17
Auto-arm timer 21
Auto-arming options 21
Auto-test report 30
Auto-zone Shutdown 15
Auto-zone Shutdown counter 15

B

Backup battery pack 6
Backup telephone number 27
Battery pack 6
Bell Cut-off timer 23
Bell squawk on Arm/Disarm with Remote Control 22
Bypass option 15
Bypass options, Supervision 23
Bypass options, Tamper 24

C

Call back feature 34
Call direction 28
Central station telephone numbers 27
Check-in Supervision time 23
Closing Delinquency Timer 22
Code length 12
Codes
Code length 12
Duress code 12
Installer code 12
Maintenance code 12
System master code 12
Connections
AC power 6
Backup battery 6
Hardwire zone 8
Paradox Memory Key 9, 10
PGMs 7
Telephone Line 6
UIP-256 8
WinLoad 8
X10 9
Console account number 28
Console audible trouble warning 32
Console tamper supervision 32
Console telephone numbers 26
Contact ID 28
Cut-off, Bell 23

D

Date entry, single digit 11
Daylight savings time 32
Deactivation event 31
Definitions, zone
24Hr. Burglary Zones 14
24Hr. Buzzer Zones 14
24Hr. Freeze Zones 15
24Hr. Gas Zones 15
24Hr. Heat Zones 15
24Hr. Hold-up Zones 14
24Hr. Water Zones 15
Delayed Fire Zones 14
Entry Delay 1 13
Entry Delay 2 13
Follow Zones 13
Follow/Stay Zones 14
Instant Zones 14
Instant/Stay Zones 14
Standard 24Hr. Fire Zones 14
Delay before Alarm Report Code Transmission 16
Delay between dialing attempts 29
Delay Power Failure Report 30
Delay, Alarm Transmission 16
Delay, Intellizone 16
Delay, PGM 31
Delay, Remote Panic Disarm Lock 24
Delay, Stay Delay Zones 16
Delayed Fire Zones 14
Deleting wireless zones 17
Dialer & Reporting Settings
Alternate Dial Option 29
Auto-test report 30
Console account number 28
Console telephone numbers 26
Delay between dialing attempts 29
Dialing method 29
Disarm reporting options 30
event call direction 28
Force Dial Option 29
Power failure report delay 30
Pulse ratio 29
Recent close delay 30
Report Codes 25
Reporting formats 28
RF Interference Detection 30
Switch to pulse dialing 29
TLM 29
Zone restore report options 30
Dialing method 29
Direct connect 6
Disarm reporting options 30
Disarming report codes 25
Display, trouble 32
Doorbell tones 17
Duress code 12

E

Entry Delay 1 13
Entry Delay 2 13
EOL zones 16
Event
PGM activation 31
PGM deactivation 31
Event call direction 28
Exit Delay Termination 22

F

Feature select programming 11
Fire zone types
Delayed Fire Zones 14
Standard 24Hr. Fire Zones 14
FM tuner option 32
Follow Zone switches to Entry Delay 2 22
Follow Zones 13
Follow/Stay Zones 14
Force Dial Option 29
Force Zones 16
Formats, reporting 28

H

Hardwire zone connections 8

I

Indentifier, panel 34
Installer code 12
Installler lock 32
Instant Zones 14
Instant/Stay Zones 14
Intellizone 15
Intellizone Delay timer 16

L

Line plug connect 7
Location 9
Lock system master code 12
Lock, installer 32

M

Maintenance code 12
Master code 12
Master code lock 12
Master code reset 12
Memory Key 9
Memory Key programming 11
Mounting Magellan 10

N

No Exit Delay when Arming with Remote Control 22
No Movement Auto-arming 21
No Movement timer 21
Normal state, PGM 31
Number of rings 34

O

Options, zone
Alarm types 15
Auto-zone Shutdown 15
Bypass option 15
Delay before Alarm Report Code Transmission 16
Force Zones 16
Intellizone 15
Overview, zone programming 13

P

Pack, backup battery 6
Pager reporting message 27
Pager telephone number 27
Panel answer options (WinLoad)
Answering machine override 34
Number of rings 34
Panel identifier 34
Panic Alarm types 24
Panic alarms 24
Password, PC 34
PC password 34
PC telephpone number 34
PGM (Control Panel)
Deactivation Event 31
PGM Delay 31
PMC-3 9
Power failure report delay 30
Power, AC 6
Programmable outputs 7
Activation event 31
Deactivation event 31
Normal state 31
PGM delay 31
X10 option 31
Programming methods
Feature select programming 11
Paradox Memory Key 11
Single digit data entry 11
Through the built-in keypads 11
WinLoad 11
Programming zones 13
Pulse ratio 29

R

Ratio, pulse 29
Recent close delay 30
Regular arming switches to Force arming 21
Regular arming switches to Stay arming 21
Remote controls
Assigning 18
Programming buttons 18
Remote controls, assigning 18
Report codes
AC failure 30
Arming 25
Disarming 25
Special 26
Special alarm 25
Special arming 25

Special disarming 25
System trouble 26
System trouble restore 26
Test 30
Zone alarm 25
Zone alarm restore 25
Zone tamper 26
Zone tamper restore 26
Report formats
Ademco Contact ID format 28
Ademco slow format 28
SESCOA format 28
SIA FSK format 28
Silent Knight fast format 28
Standard Pulse format 28
Reporting & Dialer Settings
Account number 28
Alternate dial options 29
Auto-test report 30
Console telephone numbers 26
Delay between dialing attempts 29
Dialing method 29
Disarm report options 30
Event call direction 28
Force Dial Option 29
Power Failure report delay 30
Pulse ratio 29
Recent Close Delay 30
Report Codes 25
Reporting formats 28
RF Interference Detection 30
Switch to Pulse dialing 29
TLM 29
Zone Restore Report options 30
Reset software 32
Reset system master code 12
RF Interference Detection 30

S

Service telephone number 27
SESCOA 28
Shutdown, Auto-zone 15
SIA FSK 28
Silent Knight Fast 28
Single digit data entry method 11
Software reset 32
Special alarm report codes 25
Special arming report codes 25
Special disarming report codes 25
Special keys for telephone nos. 26
Special report codes 26
Standard 24Hr. Fire Zones 14
Stay Arm Siren Delay 22
Stay arming switches to Force arming 21
Stay zone types
Follow/Stay Zones 14
Instant/Stay Zones 14
Supervision
Check-in 23
Console tamper 32
Wireless transmitters 23
Supervision Bypass options 23
Switch to Pulse dialing 29
System master code 12
System master code lock 12
System master code reset 12
System settings
AC power failure warning 32
Console audible trouble warning 32
Console tamper supervision 32
Daylight savings time 32
FM tuner option 32
Installer lock 32
Software reset 32
System trouble report codes 26
System trouble restore report codes 26

T

Tamper Bypass options 24
Tamper Recognition options 23
Tamper supervision, console 32
Telephone line connection
Direct connect 6
Line plug connect 7
Telephone Line Monitoring (TLM) 29
Telephone numbers 26
Central station 27
Pager 27
PC 34
Service 27
Voice Message 27
Test report code 30
Test Report, Automatic 30
Timed Auto-arming 21
Timers
Alarm Transmission 16
Auto-arm 21
Auto-zone Shutdown 15
Bell Cut-off 23
Check-in Supervision 23
Closing Delinquency 22
Delay between dialing attempts 29
Entry Delay 1 13
Entry Delay 2 13
Exit delay 22
Intellizone 16
No Movement 21
PGM delay 31
Power failure report delay 30
Recent close 30
TLM fail 30
TLM fail timer 30
Tones, doorbell 17
Transmitter supervision options 23
Trouble display 32
Trouble, audible warning 32

U

User codes
Duress code 12
Installer code 12
Maintenance code 12

System master code 12
User code length 12

V

Viewing 17
Viewing transmitter signal strength 17
Voice message repetitions 27
Voice message telephone numbers 27

W

Wall plate 9
WinLoad 11
WinLoad settings
Call back feature 34
Panel answer options 34
Panel identifier 34
PC password 34
PC telephone number 34
Wireless programming
Assigning remote controls 18
Assigning wireless doorbells 17
Assigning wireless zones 17
Deleting wireless zones 17
Programming remote control buttons 18
Viewing signal strength 17
Wireless Transmitter Supervision options 23
Wireless zones become hardwire 16
Wirless doorbell tones 17

X

X10 connections 9
X10 PGM option 31

Z

Zone alarm report codes 25
Zone alarm restore report codes 25
Zone definitions
24Hr. Burglary Zones 14
24Hr. Buzzer Zones 14
24Hr. Freeze Zones 15
24Hr. Gas Zones 15
24Hr. Heat Zones 15
24Hr. Hold-up Zones 14
24Hr. Water Zones 15
Delayed Fire Zones 14
Entry Delay 1 13
Entry Delay 2 13
Follow Zones 13
Follow/Stay Zones 14
Instant Zones 14
Instant/Stay Zones 14
Standard 24Hr. Fire Zones 14
Zone options
Alarm types 15
Auto-zone Shutdown 15
Bypass option 15
Delay before Alarm Code Transmission 16
Force Zones 16
Intellizone 15
Stay Delay Zones 16
Zone programming 13
Zone restore report options 30
Zone tamper report codes 26
Zone tamper restore report codes 26
Zone, hardwire 8

WARRANTY

Paradox Security Systems Ltd. (“Seller”) warrants its products to be free from defects in materials and workmanship under normal use for a period of one year. Except as specifically stated herein, all express or implied warranties whatsoever, statutory or otherwise, including without limitation, any implied warranty of merchantability and fitness for a particular purpose, are expressly excluded. Because Seller does not install or connect the products and because the products may be used in conjunction with products not manufactured by Seller, Seller cannot guarantee the performance of the security system and shall not be responsible for circumstances resulting from the product’s inability to operate. Seller obligation and liability under this warranty is expressly limited to repairing or replacing, at Seller's option, any product not meeting the specifications. Returns must include proof of purchase and be within the warranty period. In no event shall the Seller be liable to the buyer or any other person for any loss or damages whether direct or indirect or consequential or incidental, including without limitation, any damages for lost profits stolen goods, or claims by any other party, caused by defective goods or otherwise arising from the improper, incorrect or otherwise faulty installation or use of the merchandise sold.

Notwithstanding the preceding paragraph, the Seller’s maximum liability will be strictly limited to the purchase price of the defective product. Your use of this product signifies your acceptance of this warranty.

BEWARE: Dealers, installers and/or others selling the product are not authorized to modify this warranty or make additional warranties that are binding on the Seller.

© 2004 Paradox Security Systems Ltd. All rights reserved.
Magellan is a trademark or registered trademark of Paradox Security Systems Ltd. or its affiliates in Canada, the United States and/or other countries. Windows® is a registered trademark of Microsoft Corporation. All rights reserved. Specifications may change without prior notice.

FCC WARNINGS

IMPORTANT INFORMATION

This equipment complies with Part 68 of the FCC rules subpart D and CS-03. Inside the cover of this equipment is a label that contains, among other information, the FCC registration number of this equipment.

NOTIFICATION TO TELEPHONE COMPANY

Upon request, customer shall notify telephone company of particular line to which the connection will be made, and provide the FCC registration number and the ringer equivalence of the protective circuit.

FCC REGISTRATION NUMBER:5A7AL01BMG-6060
RINGER EQUIVALENCE NUMBER:0.1B (U.S. & Canada)
USOC JACK:RJ31X (USA), CA31A (CANADA)

TELEPHONE CONNECTION REQUIREMENTS

Except for telephone company provided ringers, all connections to the telephone network shall be made through standard plugs and telephone company provided jacks, or equivalent, in such a manner as to allow for easy, immediate disconnection of terminal equipment. Standard jacks shall be so arranged that, if plug connected thereto is withdrawn, no interference to operation of equipment at customer's premises which remains connected to telephone network shall occur by reason of such withdrawal.

INCIDENCE OF HARM

Should terminal equipment/protective circuitry cause harm to telephone network, telephone company shall, where practicable, notify customer that temporary disconnection of service may be required; however, where prior notice is not practicable, the telephone company may temporarily discontinue service if action is deemed reasonable in circumstances. In case of temporary discontinuance, telephone company shall promptly notify customer and will be given opportunity to correct the situation.

CHANGES IN TELEPHONE COMPANY EQUIPMENT OR FACILITIES

The telephone company may make changes in its communication facilities, equipment operations or procedures, where such actions are reasonably required and proper in its business. Should any such changes render customer's terminal equipment incompatible with the telephone company facilities, the customer shall be given adequate notice to effect the modifications to maintain uninterrupted service.

GENERAL

This equipment shall not be used on coin telephone lines. Connection to party line service is subject to state tariffs.

RINGER EQUIVALENCE NUMBER (REN)

The ren is useful to determine the quantity of devices that you may connect to your telephone line and still have all of those devices ring when your telephone number is called. In most, but not all areas, sum of the ren's of all devices connected to one line should not exceed five (5.0). To be certain of the number of devices that you may connect to your line, you may want to contact your local telephone company.

EQUIPMENT MAINTENANCE FACILITY

If you experience trouble with this telephone equipment, please contact facility indicated below for information on obtaining service or repairs. The telephone company may ask that you disconnect this equipment from network until problem is corrected or until you are sure that the equipment is not malfunctioning.

FCC PART 15, WARNINGSINFORMATION TO USER

This equipment has been tested and found to comply with the limits for Class B digital devices, pursuant to Part 15 of FCC rules. These limits are designed to provide reasonable protection against harmful interference in a residential installation. This equipment generates, uses and can radiate radio frequency energy, and, if not installed and used in accordance with the instructions, may cause harmful interference to radio communications. However, there is no guarantee that interference will not occur in a particular installation. If this equipment does cause harmful interference to equipment intermittently, the user is encouraged to try to correct the interference by one or more of the following measures: (1) re orient or relocate the receiving antenna; (2) increase the separation between the equipment and receiver; (3) connect the equipment to an outlet on a circuit other than the one to which the receiver is connected, or (4) consult the dealer or an experienced radio/tv technician for assistance.
Operation is subject to the following two conditions: (1) this device may not cause harmful interference, and (2) this device must accept any interference received, including interference that may cause undesired operation.

CAUTION:

Changes or modifications not expressly approved by PARADOX SECURITY SYSTEMS could void the user's authority to operate the equipment.

For technical support in Canada or the U.S., call 1-800-791-1919 for English or 1-866-912-0600 for French, Monday to Friday from 8:00AM to 8:00PM EST. For technical support outside Canada and the U.S., call 00-1-450-491-7444, Monday to Friday from 8:00AM to 8:00PM EST. Please feel free to visit our website at www.paradox.ca.

PARADOX®
SECURITY SYSTEMS
780 Industriel Blvd., Saint-Eustache (Quebec) J7R 5V3 CANADA
Tel.: (450) 491-7444 Fax: (450) 491-7313
www.paradox.ca
Printed in Canada - 11/2004 MAGELLAN-EI02