VISTA-128FB

Commercial Fire and Burglary

Partitioned Security System

with Scheduling

Installation and Setup Guide

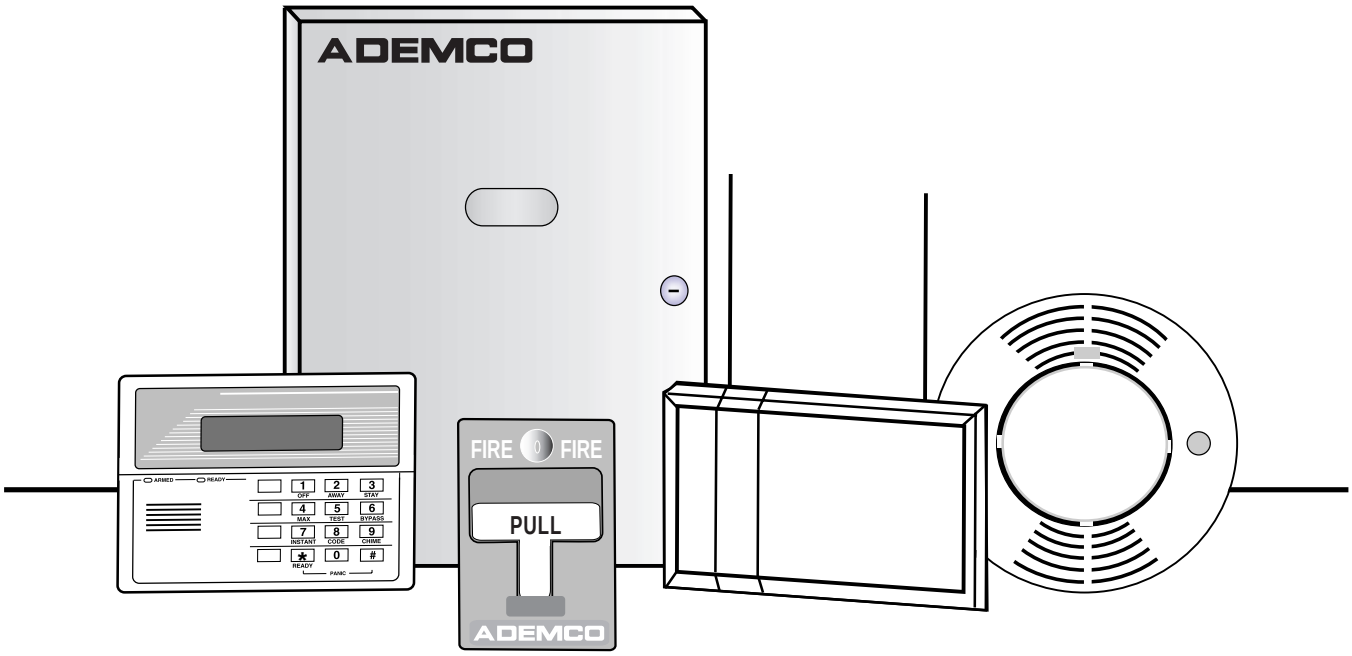

®ADEMCO

N8988V2 8/00

Table of Contents

List of Figures viii

Conventions Used in This Manual ix

SECTION 1 General Description 1-1
- General 1-1
- Features 1-1

SECTION 2 Planning a Partitioned System 2-1
- Theory of Partitioning 2-1
- Setting Up a Partitioned System 2-2
- Common Lobby Logic 2-2
- Master Keypad Setup and Operation 2-5

SECTION 3 False Alarm Reduction Features 3-1
- General Information 3-1
- Exit Error Logic and Related Reports 3-1
- Recent Close Report 3-1
- Exit Delay Reset 3-2
- Cross Zoning 3-2
- Call Waiting Defeat Logic 3-3

SECTION 4 Installing The Control 4-1
- Mounting the Control Cabinet 4-1
- Installing the Cabinet Lock 4-1
- Grade A Mercantile Premises Listing 4-2
- Grade A Mercantile Safe and Vault Listing 4-2
- Installing the Control's Circuit Board 4-3
- Connecting the AC Transformer and Battery 4-4
- Panel Earth Ground Connections 4-4

SECTION 5 Installing The Keypads 5-1
- Keypads That May Be Used 5-1
- Wiring to the Keypads 5-1
- Using a Supplementary Power Supply to Power Additional Keypads 5-2
- Mounting the Keypads 5-3
- Addressing the Keypads/Preliminary Checkout Procedure 5-3

SECTION 6 Basic Hardwired Zones 001-008 6-1
- Common Characteristics of Hardwired Zones 1-8 6-1
- Wiring Burglary and Panic Devices to Zones 1-8 6-1
- Wiring 2-Wire Smoke Detectors to Zones 1 and 2 6-2
- Compatible 2-Wire Smoke Detectors 6-3
- Wiring 4-Wire Smoke Detectors to Zones 1-8 6-3
- Compatible 4-Wire Smoke Detectors 6-4
- Fire Alarm Verification for Smoke Detectors 6-4
- Zone 6 Tamper Configuration 6-4
- Wiring 2-Wire Latching Glassbreak Detectors To Zone 8 6-5
- Compatible Glassbreak Detectors 6-5
- Checkout Procedure for Hardwired Zones 6-6

SECTION 7 2-Wire Polling Loop Expansion (Zones 009 - 128) 7-1
Polling Loop Overview 7-1
Common Characteristics of Polling Loop Zones 7-1
Wiring/Addressing RPM Devices 7-2
Polling Loop Supervision 7-5
Checkout Procedure for Polling Loop Zones 7-5
Compatible Polling Loop Devices 7-6

SECTION 8 Wireless Zone Expansion 8-1
Characteristics of Wireless Zones 8-1
RF System Operation and Supervision 8-2
RF System Installation Advisories 8-2
Installation and Setup of the 5881 RF Receivers 8-3
Installing the 5800TM Module 8-3
House ID Sniffer Mode 8-4
5800 Series Transmitter Setup 8-4
Compatible 5800 Series Transmitters 8-6
Checkout Procedure for Wireless Zones 8-8

SECTION 9 Output Devices 9-1
General Information 9-1
Installing the 4204 and 4204CF Relay Modules 9-2
Installing the FSA Modules 9-4
Programming Output Devices 9-4

SECTION 10 4285/4286 VIP Module 10-1
General Information 10-1
Mounting the VIP Module 10-2
Wiring the VIP Module 10-2

SECTION 11 Audio Alarm Verification (AAV) Unit 11-1
General Information 11-1
AAV Module Operation 11-1
Audio Alarm Verification Module Connections 11-2
Programming Audio Alarm Verification Module Options 11-2

SECTION 12 J2 Trigger Outputs 12-1
General Information 12-1
Remote Keypad Sounder Operation and Wiring 12-2
Remote Keyswitch Operation and Wiring 12-2
5140LED Indicator Module 12-4
Auxiliary Alarm Signaling Equipment 12-5
Event Log Printer Connections 12-8
Direct Wire Downloading 12-8

SECTION 13 Long Range Radio(ECP) 13-1
General Information 13-1
Wiring the Long Range Radio to the Control 13-2
Programming the Control for the Long Range Radio 13-2
Trouble Messages 13-3

SECTION 14 Access Control 14-1
General Information 14-1
Access Control Using VistaKey 14-1
Access Control Using the PassPoint Access Control System 14-5
Access Control of an Entry/Exit Point 14-5
Using VISTA-128FB Without the VGM and PassPoint ACS 14-7
Access Control Dialer Events 14-7

Wiring the Vista Gateway Module *14-7*

SECTION 15 External Sounders 15-1
General Information *15-1*
Bell Circuit Supervision *15-1*
Wiring Bell Outputs *15-2*
Compatible Alarm-Indicating Devices *15-2*
Programming the Bell Outputs *15-3*

SECTION 16 Auxiliary Relay 16-1
Relay Functions *16-1*

SECTION 17 Dialer Outputs 17-1
Dialer Outputs Available *17-1*
Telephone Line Connections *17-1*
Telephone Line Supervision *17-1*
Dialer Operation *17-2*

SECTION 18 Event Log Options 18-1
General Information *18-1*
Event Log Printer Connections *18-1*
Programming Event Log Options *18-2*
Event Logging Procedures *18-3*

SECTION 19 4100APG Pager Interface 19-1
General Information *19-1*
Mounting the 4100APG *19-1*
Wiring the 4100APG *19-2*
Programming the Control for the Pager *19-3*
4100APG LED Indications *19-4*

SECTION 20 Final Power-Up Procedure 20-1
Connecting the AC Transformer *20-1*
Earth Ground Connections *20-2*
Backup Power Calculations *20-2*
Connecting the Backup Battery to the Control *20-3*
Total Control Panel Load Worksheets *20-4*

SECTION 21 The Mechanics of Programming 21-1
Using Data Field Program Mode *21-1*
System and Communication Defaults *21-1*
Entering Data Field Programming Mode *21-2*
Moving from One Page of Programming to Another *21-2*
Viewing Data Fields *21-2*
Entry Errors *21-2*
Programming System-Wide Data Fields *21-3*
Programming Partition-Specific Data Fields *21-3*
 # 93 Menu Mode Programming *21-4*

SECTION 22 Zone Type Definitions 22-1
Zone Number Designations *22-1*
Zone Type Definitions *22-1*

SECTION 23 Zone Index/Zone Type Defaults 23-1
Zone Index *23-1*
Zone Type Defaults *23-2*

SECTION 24 Data Field Descriptions 24-1

SECTION 25 Scheduling Options 25-1
Introduction to Scheduling 25-1
Time Window Definitions 25-3
Open/Close Definitions 25-4
Scheduling Menu Mode 25-6
Scheduling Menu Structure 25-7
Time Windows 25-8
Daily Open/Close Schedules 25-9
Holiday Schedules 25-10
Time-Driven Events 25-11
Limitation of Access Schedules 25-15
Temporary Schedules 25-16
User Scheduling Menu Mode 25-18

SECTION 26 System Communication 26-1
A Successful Transmission 26-1
Reporting Formats 26-1

SECTION 27 Downloading Primer 27-1
General Information 27-1
Getting On-Line with a Control Panel 27-2
On-Line Control Functions 27-2
Access Security 27-3
Connecting a 4100SM Module for Direct Wire Downloading 27-3

SECTION 28 Setting the Real-Time Clock 28-1
General Information 28-1
Setting the Time and Date 28-1

SECTION 29 User Access Codes 29-1
General Information 29-1
User Codes & Levels of Authority 29-1
To ADD a Master, Manager, or Operator Code 29-4
To CHANGE a Master, Manager, or Operator Code 29-6
To Add an RF Key to an Existing User 29-6
To Delete a Master, Manager, or Operator Code 29-6
To EXIT the User Edit Mode 29-7

SECTION 30 Keypad Functions 30-1
General Information 30-1
Arming Functions 30-1
Global Arming 30-2
Access Control 30-3
Delaying Closing Time 30-3
Partition "GOTO" Commands 30-3
Viewing Capabilities of a User 30-4
Viewing Zone Descriptors 30-4
Viewing Downloaded Messages 30-4
Using the Built-in User's Manual 30-4
Panic Keys 30-4
Speed Key [D] (Macros) 30-5
Manual Relay Activation Mode (#70 Mode) 30-6

SECTION 31 Testing The System 31-1
Battery Test 31-1
Dialer Test 31-1
Fire Drill Test (code + [#] + 69) 31-1

One-Man Fire Walk-Test (code + [#] + 68) *31-2*
Burglary Walk-Test (Code + TEST [5]) *31-3*
Armed Burglary System Test *31-4*
Trouble Conditions *31-4*
Turning the System Over to the User *31-6*
To The Installer *31-6*

APPENDIX A Regulatory Agency Statements A-1
UL Installation Requirements *A-1*
UL864/NFPA Local Fire *A-1*
UL864/NFPA Central Station and Remote Station Fire *A-1*
UL609 Grade A Local Mercantile Premises/Local Mercantile Safe & Vault *A-2*
UL365 Police Station Connected Burglar Alarm *A-2*
UL611/UL1610 Central Station Burglary Alarm *A-2*
California State Fire Marshal (CSFM) Requirements. *A-3*

APPENDIX B DIP Switch Tables B-1

APPENDIX C Summary of System Commands C-1

APPENDIX D Specifications D-1

Index Index-1

THE LIMITATIONS OF THIS ALARM SYSTEM

ADEMCO LIMITED WARRANTY

List of Figures

Figure 4-1: Installing the Lock *1*
Figure 4-2: Cabinet Attack Resistance Considerations *4-2*
Figure 4-3: Mounting the PC Board *4-3*
Figure 5-1: Keypad Connections To Keypad Port 1. ..... *5-2*
Figure 6-1: 2-Wire Smoke Detector Connected to Zone 1 (can also be connected to Zone 2) *6-2*
Figure 6-2: 4-Wire Smoke Detector Connections (Zones 1-8) *6-4*
Figure 6-3: Wiring Latching Glassbreak Detectors to Zone 8 ..... *6-5*
Figure 7-1: Polling Loop Connections *7-3*
Figure 7-2: Polling Loop Connections Using One 4297 Extender Module *7-4*
Figure 7-3: Polling Loop Connections Using Multiple Extender Modules *7-4*
Figure 8-1: 5881 RF Receiver (cover removed) *8-3*
Figure 9-1: 4204 Relay Module *9-3*
Figure 9-2: 4204CF Relay Module *9-3*
Figure 9-3: Wiring the FSA Module *9-4*
Figure 10-1: 4285/4286 VIP Module Connections *10-3*
Figure 12-1: J2 Pin Assignments and Functions *12-2*
Figure 12-2: Remote Keypad Sounder Wiring *12-2*
Figure 12-3: Remote Keyswitch Wiring *12-3*
Figure 12-4: 5140LED Indicator Module *12-5*
Figure 12-5: Connections to 7720 Long Range Radio *12-6*
Figure 12-6: Connections to 7720ULF Long Range Radio *12-7*
Figure 12-7: Connections to 7920SE Long Range Radio *12-7*
Figure 13-1. Long Range Radio to Keypad Terminals *13-2*
Figure 14-1: Wiring the VistaKey *14-3*
Figure 14-2: Wiring the Vista Gateway Module *14-8*
Figure 15-1: External Sounder Connections *15-3*
Figure 16-1. Auxiliary Relay Used as Unsupervised Bell Output *16-1*
Figure 16-2. Auxiliary Relay Used for Resetting 4-Wire Smoke Detectors *16-2*
Figure 18-1: Event Log Printer Connections *18-2*
Figure 19-1: Wiring the 4100APG Without the Serial Printer *19-2*
Figure 19-2: Wiring the 4100APG With the Serial Printer *19-3*
Figure 20-1: Connecting the Backup Batteries to the Control *20-3*
Figure 27-1. Direct Wire Downloading Connections *27-4*
Summary of Connections Diagram ..... *Inside Back Cover*

Conventions Used in This Manual

Before you begin using this manual, it is important that you understand the meaning of the following symbols (icons).

UL

These notes include specific information which must be followed if you are installing this system for a UL Listed application.

These notes include information that you should be aware of before continuing with the installation, and which, if not observed, could result in operational difficulties.

This symbol indicates a critical note that could seriously affect the operation of the system, or could cause damage to the system. Please read each warning carefully. This symbol also denotes warnings about physical harm to the user.

Enter Zn Num. (00 = Quit)

Many system options are programmed in an interactive mode by responding to alpha keypad display prompts. These prompts are shown in a single-line box.

✳00 When programming the system, data fields are indicated by a “star” (✳) followed by the data field number.

PRODUCT MODEL NUMBERS: Unless noted otherwise, references to specific model number represent ADEMCO products.

General Description

In This Section

- General
- Features

General

The VISTA-128FB is an 8-partition, UL listed commercial fire and burglary control panel that supports up to 128 zones using basic hardwired, polling loop, and wireless zones. It also includes zones for supervision of bells, phone lines, keypads, RF receivers, and relays. In addition, the control offers scheduling capabilities and allows certain operations to be automated by pressing a single button. The system has the capability to interface with an alpha numeric paging device and also an ECP long range radio unit that can send Contact ID messages. The control can be connected to the ADEMCO PassPoint system (via the Vista Gateway Module) or a VistaKey module (via the polling loop) to provide a fully integrated security and access control system.

Features

Basic Hardwired Zones

Provides 8 style-B hardwire zones with the following characteristics:

- EOLR supervision (optional for zones 3-8) supporting N.O. or N.C. sensors
- (EOLR supervision required for fire and UL burglary installations)
- Individually assignable to one of 8 partitions
- Up to 16 2-wire smoke detectors each on zones 1 and 2 (32 total)
- 4-wire smoke or heat detectors on zones 1-8 (power to 4-wire smoke detectors must be supervised with an EOL device)
- Up to 50 2-wire latching glassbreak detectors on zone 8
- Individually assignable to bell outputs and/or aux. relay

Optional Expansion Zones

Polling Loop Expansion

Supports up to 120 additional hardwire zones using a built-in polling (multiplex) loop interface. Current draw can total up to 128mA. Polling loop zones have the following characteristics:

- Must use RPM (Remote Point Module) devices
- Supervised by control panel
- Individually assignable to one of 8 partitions
- Individually assignable to bell outputs and/or aux. relay

Wireless Expansion

Supports up to 128 wireless zones using 5881 type RF receiver (fewer if using hardwire and/or polling loop zones). Wireless zones have the following characteristics:

- Supervised by control panel for check-in signals (except certain nonsupervised transmitters)
- Tamper protection for 5800 Series supervised transmitters
- Individually assignable to one of 8 partitions
- Individually assignable to bell outputs and/or auxiliary relay

UL

Wireless devices may not be used in UL commercial burglary installations. UL Listing of the 5808 Smoke Detector for commercial fire installations is pending.

For specific information regarding number of wireless zones supported by each RF receiver, see the Wireless Zone Expansion section.

System Zones

Provides zones for supervision of all peripheral devices (keypads, RF receivers, and relay modules) and individual relays, as well as system zones (bells, dialers (telephone lines), earth ground, keypad panics, etc.). Zone assignments are as follows:

Individual Relay Zones	601-632
Peripheral Device Zones	800-831
System Zones	970-999

(See the *Zone Index* section for a full explanation of these zones and specific zone assignments.)

Maintenance Signal Support

The control monitors maintenance signals from certain smoke detectors (5808, 4192CPM, 4192SDM, 4192SDTM, 5192). Maintenance signals are triggered when a smoke detector gets dirty, and indicate that the detector should be cleaned or replaced. If a detector maintains a high or low sensitivity condition for longer than 24 hours, the control sends a Dialer, makes an event log entry, and displays “HSENS xxx” or “LSENS xxx” at the keypads (xxx = zone number).

Note: 5808 Wireless Smoke Detectors report high sensitivity regardless of whether the condition is actually high-sensitivity or low-sensitivity.

8 Partitions

Provides the ability to control 8 separate areas independently, each functioning as if it had its own separate control. Partitioning features include:

- A Common Lobby partition (1-8), which can be programmed to arm automatically when the last partition that shares the common lobby is armed and to disarm when the first partition that shares the common lobby is disarmed
- A Master partition (9), used strictly to assign keypads for the purpose of viewing the status of all 8 partitions at the same time (master keypads)
- All zones (except fire) assignable to one of 8 partitions
- Fire zones must be assigned to Partition 1

- Keypads assignable to one of 8 partitions or to Master partition 9 to view system status
- Ability to assign relays to one or all 8 partitions
- Ability to display fire and/or burglary and panic and/or trouble conditions at all other partitions keypads (selectable option)
- Certain system options selectable for each partition, such as entry/exit delay and subscriber account number

User Codes

Accommodates 150 user codes, all of which can operate any or all partitions. Certain characteristics must be assigned to each user code, which are as follows:

- Authority level (Master, Manager, or several other Operator levels)
- Opening/Closing central station reporting option
- What partitions the code can operate
- Global arming capability (arm all partitions the code has access to in one command)
- Use of an RF button to arm and disarm the system

Peripheral Devices

Supports up to 31 addressable devices, which can be any combination of keypads (6139/6139R), RF receivers (5881), relay modules (4204/4204CF), and 4285/4286 VIP module. Peripheral Devices have the following characteristics:

- Each device set to an individual address (physically) according to the device's instructions
- Each device enabled in the system using the Device Programming Mode (covered later in this manual)

At least one 2-line alpha keypad (6139/6139R) must be connected to the system for programming (if using keypad programming) and must remain connected to the system in order to allow the primary user to program additional user codes into the system at a later time.

Keypad Panic Keys

Accommodates three keypad panic keys: 1 + ✳ (A), ✳ + # (B), and 3 + # (C).

- Designated as zones 995 (1 + ✳), 996 (3 + #), and 999 (✳ + #)
- Activated by wired and wireless keypads
- Activated and reported separately by partition, distinguished by subscriber account number (or partition number. if Contact ID reporting is used)

Keypad Macros

Accommodates 32 keypad macro commands per system (each macro is a series of keypad commands). For example, by pressing either the A, B, C, or D key, the system can be programmed to log onto another partition, bypass zones 2 and 3, and arm that partition in the AWAY mode (explained in detail later in this manual). Characteristics of keypad macros are:

- Assignable to the A, B, and C keys by partition
- Other macros (not assigned to these keys) executed by using the D key
- Each macro can be 32 characters (keystrokes) in length

Bell Outputs

Provides two style-Y supervised bell outputs on the control panel itself. A 4204CF Relay Module can supply two additional style-Y supervised bell outputs.

Auxiliary Relay

Provides a built-in Form C relay which can be used for one of the following:

- Alarm activation
- Trouble/supervisory activation
- 4-wire smoke detector reset
- Battery saving feature (disconnects power from noncritical loads 4 hours after AC power loss)

Optional Output Devices

Accommodates the use of 96 relay outputs using ADEMCO's 4204 and 4204CF Relay, Fire System Annunciators (FSA-8, FSA-24), and V-Plex Relay Modules. Each 4204 module provides four Form C relays for general purpose use. Each 4204CF provides two style-Y supervised bell outputs. The FSA-8 provides 8 LED outputs and the FSA-24 provides 24 LED outputs. Outputs have the following characteristics:

- Can be programmed to activate in response to system events
- Can be programmed to activate using time intervals
- Can be used for additional style-Y supervised bell outputs (4204CF only)
- Can be activated manually using the #70 Relay Command Mode
- Can be supervised by control panel (zones 601-632)
- Can each have an alpha descriptor assigned to it

Optional Vista Interactive Phone Module

Supports the ADEMCO 4285/4286 VIP Module. This permits access to the security system to do the following:

- Obtain system status information
- Arm and disarm security system
- Control relays

UL The 4285/4286 VIP Module is not Listed for use with the VISTA-128FB Control Panel in a UL commercial installation.

Access Control

If programmed, provides users with a command, which activates relays to open access doors (e.g., lobby door), to turn on lights, etc. Each partition can be assigned any number of access control relays, up to 32 for the system.

By using the Vista Gateway Module (VGM), the control can be connected to the ADEMCO PassPoint system for a fully integrated access control system.

The VistaKey module may also be used for access control. It is a single-door access control module that, when connected to the VISTA-128FB, provides access control to the protected premises. The system can support up to 8 VistaKey modules (8 access points).

UL VGM is not Listed for use with the VISTA-128FB Control Panel in a UL commercial installation. VistaKey is Listed for use with the VISTA-128FB Control Panel in both UL and CUL commercial installations.

Optional Backup Dialer

Supports use of 5140DLM Backup Dialer for connecting to a second supervised telephone line.

Optional 24-Volt Power Supply

Compatible with the PS24 Power Supply Module, which supplies two 24VFW, 1.7A full-wave rectified, unfiltered outputs. The module is used to supply power to:

- Alarm notification appliances (sirens, strobes, etc.)
- Auxiliary devices which can operate using full-wave rectified, unfiltered voltage

Optional Keyswitch

Supports the ADEMCO 4146 Keyswitch on any one of the system's 8 partitions. If used, zone 7 is no longer available as a protection zone.

Voltage Triggers

Provides a trigger connector whose pins change state for different conditions. Used with LRR (Long Range Radio) equipment or other devices such as a remote keypad sounder, keyswitch ARMED and READY LEDs, or a printer to print the system's event log.

Event Log

Keeps a log of different event types (enabled in programming). The event log has the following characteristics:

- Stores up to 512 events
- Can be viewed at the keypad or through the use of Compass software
- Can be printed on a serial printer using a 4100SM Module including zone alpha descriptors
- Can store PassPoint events
- Printed events can be sent to an alpha numeric pager

Scheduling

Provides the following scheduling capabilities:

- Open/close schedules (for control of arming/disarming and reporting)
- Holiday schedules (allows different time windows for open/close schedules)
- Timed events (for activation of relays, auto-bypassing and unbypassing, auto-arming and disarming, etc.)
- Access schedules (for limiting system access to users by time)
- End User Output Programming Mode (provides 20 timers for relay control)

Communications Formats

Supports the following formats for the primary and secondary central station receivers:

- ADEMCO Low Speed (Standard or Expanded)
- Sescoa/Radionics
- ADEMCO Express
- ADEMCO High Speed
- ADEMCO Contact ID
- Long Range Radio interface (ECP)

Audio Alarm Verification Option

Provides a programmable Audio Alarm Verification (AAV) option which can be used in conjunction with an output relay to permit voice dialog between an operator at the central station and a person at the premises. An optional AAV unit, such as Eagle model 1250, is required.

UL The Eagle Model 1250 AAV unit is not UL Listed.

Cross-Zoning Capability

Helps prevent false alarms by preventing a zone from going into alarm unless its cross-zone is also faulted within 5 minutes.

Exit Error False Alarm Prevention Feature

- System can tell the difference between a regular alarm and an alarm caused by leaving an entry/exit door open. If not subsequently disarmed, faulted E/E zone(s) and/or interior zones will be bypassed and the system will arm.
- Generates an Exit Error report by user and by zone so the central station knows it was an exit alarm and who caused it.

Enhanced Fire Walk-Test Mode

Provides the installer the ability to test fire zones more quickly and reliably. The following features apply:

- Automatic test of all integrated RPM (polling loop) devices that have the automatic test feature
- Dynamic display of all fire zones that remain untested while test is in progress
- Ability to log results (all fire zones tested and untested) in system's event log
- Ability to report results (all fire zones tested and untested) to the central station

Built-in User's Manual and Descriptor Review

For end-user convenience, the Vista-128FB contains a built-in User's Manual. By depressing any of the function keys on the keypad for 5 seconds, a brief explanation of that function scrolls across the alpha numeric display. In addition, all programmed zone descriptors can be displayed (one at a time) by pressing the READY key for 5 seconds. This serves as a check for installers to be sure all descriptors are entered properly.

Improved Downloading Features

- Uploads and downloads at 300 baud, making upload/download speed faster.
- Ability to upload ECP devices, their physical addresses, programmed addresses, and firmware revision levels from the control.

Agency Listings

Fire

- UL864-NFPA 72 Local, Central Station, and Remote Station

Burglary

- UL609 Grade A Local Mercantile Premises and Mercantile Safe and Vault
- UL611/UL1610 Grades A, AA Central Station
- UL365 Grades A, AA Police Connect

Planning a Partitioned System

In This Section

- *Theory of Partitioning*
- *Setting Up a Partitioned System*
- *Common Lobby Logic*
- *Master Keypad Setup and Operation*

Theory of Partitioning

This system provides the ability to arm and disarm up to 8 different areas, as if each had its own control. These areas are called partitions. Partitions are used to disarm certain areas while leaving other areas armed, or to limit access to certain areas to specific individuals. Each system user can be assigned to operate any or all partitions, and can be given a different authority level in each.

Before anything can be assigned to those partitions, you must first determine how many partitions are required (1-8).

Following are some facts you need to know about partitioning.

Keypads

Each keypad must be given a unique "address" and be assigned to one partition (it can also be assigned to Partition 9 if Master keypad operation is desired. (See “Master Keypad Setup and Operation” later in this section).

Zones

Each zone must be assigned to one partition.

The zones assigned to a partition will be displayed on that partition's keypad(s).

Fire zones must be assigned to Partition 1.

Users

Each user may be given access to one or more partitions. If a user is to operate more than one partition and would like to arm/disarm all or some of those partitions with a single command, the user must be enabled for global arming for those partitions (when entering user codes).

A user with access to more than one partition (multiple access) can "log on" to one partition from another partition's keypad, provided that program field 2*18: Enable GOTO is enabled for each partition he/she wants to log on to from another.

A partition can be selected as a "common lobby" partition, and other partitions can affect this partition by causing arming/disarming of this partition to be automated (see “Common Lobby Logic” later in this section).

Setting Up a Partitioned System

The basic steps to setting up a partitioned system are described below. If you need more information on how to program the prescribed options, see *The Mechanics of Programming* section as well as each corresponding section's programming procedure.

1. Determine how many partitions the system will consist of (programmed in field 2*00).
2. Assign keypads to partitions (*Device Programming Mode* in *#93 Menu Mode* of the *Programming Guide*).
3. Assign zones to partitions (Zone Programming Mode in #93 Menu Mode of the Programming Guide).

All fire zones must be assigned to Partition 1 to ensure that all Fire Test modes operate correctly.

4. Confirm zones are displayed at the keypad(s) assigned to those partitions.
5. Assign users to partitions.
6. Enable the GOTO feature (program field 2*18) for each partition a multiple-access user can log on to (alpha keypad only).
7. Program partition-specific fields (see the *Data Field Descriptions* section).

Common Lobby Logic

When an installation consists of a partition shared by users of other partitions in a building, that shared partition may be assigned as the "common lobby" partition for the system (program field 1*17). An example of this might be in a medical building where there are two doctors' offices and a common entrance area (see example that follows explanation).

This option employs logic for automatic arming and disarming of the common lobby. Two programming fields affect the way the common lobby will react relative to the status of other partitions. They are: 1*18 Affects Lobby and 1*19 Arms Lobby.

1*18 Affects Lobby (must be programmed by partition)

Setting this option to 1 for a specific partition causes that partition to affect the operation of the common lobby as follows:

a. When the first partition that affects the lobby is disarmed, the lobby will also be disarmed.

b. The common lobby cannot be armed unless every partition selected to affect the lobby is armed.

c. Arming the last partition that affects the lobby will not cause the system to automatically attempt to arm the lobby.

1*19 Arms Lobby (must be programmed by partition)

Setting this option to 1 for a specific partition causes that partition to affect the operation of the common lobby as follows:

a. When the first partition that affects the lobby is disarmed, the lobby will also be disarmed.

b. The common lobby cannot be armed unless every partition selected to affect the lobby is armed.

c. Arming the partition that is programmed to arm the lobby will cause the system to automatically attempt to arm the lobby. If any faults exist in the lobby partition, or another partition that affects the lobby is disarmed, the lobby cannot be armed, and the message "UNABLE TO ARM LOBBY PARTITION" will be displayed.

You cannot select a partition to "arm" the lobby unless it has first been selected to "affect" the lobby. Enable field 1*18 before enabling field 1*19.

The following chart sums up how the common lobby partition will operate, if different options are set for another partition in fields 1*18 and 1*19.

1*18 Affects Lobby	1*19 Arms Lobby	Disarms when partition disarms?	Attempts to arm when partition arms?	Can be armed if other partitions disarmed?
0	0	NO	NO	YES
1	0	YES	NO	NO
1	1	YES	YES	NO
0	1	---ENTRY NOT ALLOWED---		

Example

Here is an example of how the lobby would react in a typical setup.

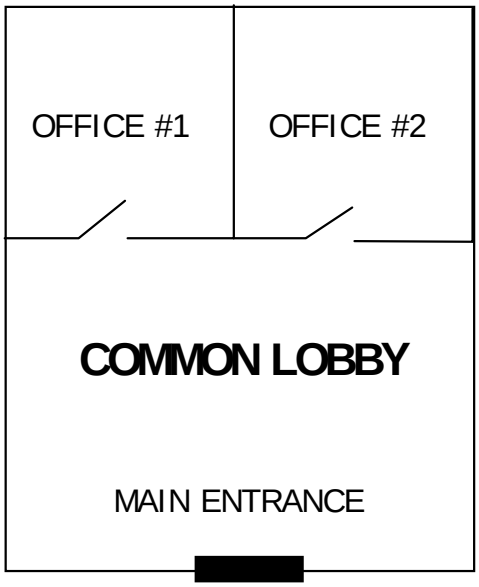

User #1 has access to Office #1 and the Common Lobby.

User #2 has access to Office #2 and the Common Lobby.

Office #1 is set up to affect the Common Lobby, but not arm it.

Office #2 is set up to affect and arm the Common Lobby.

In the tables below, the notations in parentheses ( ) indicate the current status of the other partition when the user takes action.

Sequence #1:

	Office 1	Office 2	Lobby Action
User #1:	Disarms	(Armed)	Disarms
User #2:	(Disarmed)	Disarms	No Change
User #1:	Arms	(Disarmed)	No change
User #2:	(Armed)	Arms	Arms

Sequence #2:

	Office 1	Office 2	Lobby Action
User #2:	(Armed)	Disarms	Disarms
User #1:	Disarms	(Disarmed)	(No change)
User #2:	(Disarmed)	Arms	No Change
User #1:	Arms	(Armed)	No Change

Notice that in sequence #1, since Office #2 was the last to arm, the lobby also armed (Office #2 is programmed to affect and arm the lobby). In sequence #2, the lobby could not arm when Office #2 armed, because Office #1, which affects the lobby, was still disarmed.

When Office #1 armed, the lobby still did not arm because Office #1 was not programmed to arm the lobby. User #1 would have to arm the lobby manually. Therefore, you would want to program a partition to affect and arm the lobby, if the users of that partition are expected to be the last to leave the building.

Do not assign Partition 1 as the common lobby. All fire zones should be assigned to this partition to ensure that all fire test modes operate correctly.

How User Access Codes Affect the Common Lobby

Codes with Global Arming

If a code is given "global arming" when it is defined (see the *User Access Codes* section), the keypad will ask "Arm all?" or "Disarm all?" whenever the user tries to arm or disarm the partitions he has access to from an alpha keypad. This allows the user to choose the partitions to be armed or disarmed, and so eliminates the "automatic" operation of the lobby. Keep in mind, however, that if attempting to arm all, and another "affecting" partition is disarmed, the user will not be able to arm the lobby, and the message "UNABLE TO ARM LOBBY PARTITION" will be displayed.

Codes with Non-Global Arming

If arming with a non-global code, the lobby partition operation will be automatic, as described by fields 1*18 and 1*19.

Other Methods of Arming/Disarming

Lobby logic remains active when arming or disarming a partition that affects and/or arms the common lobby in one of the following manners:

- Quick-Arm
- Keyswitch
- Wireless Button
- Wireless Keypad

Arming/Disarming Remotely

If arming or disarming remotely (through Compass downloading software), the lobby will not automatically follow another partition that is programmed to arm or disarm the lobby. The lobby must be armed separately, after arming all affecting partitions first.

Auto-Arming/Disarming

If scheduling is used to automatically arm and/or disarm partitions, the common lobby partition will not automatically follow another partition that is programmed to arm or disarm the lobby. The lobby must be included as a partition to be armed/disarmed and must be scheduled as the last partition armed.

If using auto-arming, make sure that the Auto-Arm Delay and Auto-Arm Warning periods (fields 2*05 and 2*06) combined are longer than that of any other partition that affects the lobby. This will cause the lobby to arm last.

Master Keypad Setup and Operation

Although this system has eight actual partitions, it provides an extra partition strictly for the purpose of assigning keypads as master keypads for the system.

Any keypad assigned to Partition 9 in the *Device Programming Mode* in *#93 Menu Mode* (refer to the *Programming Guide*) will make that keypad a master keypad. A master keypad reflects the status of the entire system (Partitions 1-8) on its display at one time. This is useful because it eliminates the need for a building security officer to log-on to various partitions from one partition's keypad to find out where an alarm has occurred.

The following is a typical display:

```
SYSTEM  12345678
STATUS  RRNNA ✳B
```

Possible status indications include:

A = Armed Away	M = Armed Maximum
S = Armed Stay	I = Armed Instant
R = Ready	N = Not Ready
B = Bypassed/Ready	✳ = Alarm Memory/Trouble present

To obtain more information regarding a particular partition, enter ✳ + [Partition No.] (i.e., ✳4). This will allow viewing only of that partition. In order to affect that partition, the user must use a code that has access to that partition. Also, in order for a user of any partition to log on to Partition 9 to view the status of all partitions, that user must have access to all partitions. Otherwise, access will be denied.

The following would be displayed for a fault condition on Zone 2 (Loading Dock Window) on Partition 1 (Warehouse) when logging on from a keypad on Partition 9:

```
WHSE  DISARMED
HIT ✳ FOR FAULTS
```

Pressing ✳ will cause the following display to appear at Partition 1's keypad(s):

```
FAULT 002  LOADING
DOCK  WINDOW
```

Additional zone faults will be displayed one at a time. To display a new partition's status, press ✳ + [Partition No.].

The Armed LED on a master keypad will be lit only if all partitions have been armed successfully. The Ready LED will be lit only if all partitions are "ready to arm." Neither LED will be lit if only some partitions are armed and/or only some partitions are ready.

The sounder on a master keypad will reflect the sound of the most critical condition on all of the partitions. The priority of the sounds is as follows:

a. Pulsing fire alarm sounds

b. Steady burglar alarm sounds

c. Trouble sounds (rapid beeping)

Pressing any key on the master keypad or a keypad on the partition where the condition exists silences the sounder.

A master keypad uses the same panics as Partition 1. Master keypad panics are sent to Partition 1, and will activate on Partition 1. Therefore, panics must be programmed for Partition 1.

False Alarm Reduction Features

In This Section

- *General Information*
- *Exit Error Logic and Related Reports*
- *Recent Close Report*
- *Exit Delay Reset*
- *Cross-Zoning*
- *Call Waiting Defeat Logic*

General Information

This control supports features that help minimize false alarms. Most false alarms occur upon exiting the premises, either due to environmental factors, or because the zone's resistance to the control may be on the edge of acceptability. We call this condition a "swinger."

Features which prevent false alarms due to these circumstances are:

- Exit Error Logic and related reports
- Exit Delay Reset
- Cross-Zoning

Exit Error Logic and Related Reports

UL This feature is not suitable for use on a UL commercial burglary installation.

This feature is intended to reduce the incidence of false alarms due to exit doors that are left open after the exit delay has expired. If this feature is enabled in program field 1*20, the following will occur:

At the end of the exit delay, if a door is left open or an interior zone is faulted, the system will start the entry delay period, and will sound the bell(s), siren(s) and keypad sounders for the duration of entry delay. This gives the user time to re-enter the premises and disarm the system before exit error occurs.

If the user does not re-enter the premises and disarm the system, the system will bypass the faulted entry/exit and/or interior zone(s). The rest of the system will be armed. In addition, the following dialer reports will be sent to the central station if programmed:

- Exit Error by User (not sent if using ADEMCO High Speed format)
- Exit Error by Zone (Sent as regular alarm if using ADEMCO High Speed format)
- Bypass reports

Recent Close Report

Another report, designed to notify the central station that an alarm has occurred within 5 minutes of arming, is called the **Recent Close** report. This report, as well as the Exit Error reports, are programmed in *Report Code Programming Mode* in *#93 Menu Mode*(refer to the *Programming Guide*).

Exit Delay Reset

UL

This feature is not suitable for use on a UL commercial burglary installation.

This feature is designed to allow an operator to re-enter the premises to retrieve a forgotten item without triggering an alarm. This feature is enabled in program field 1*21, and works in the following way:

When the panel is armed, the normal exit delay begins. After the user exits and the door closes, the exit delay time is reset to 60 seconds. If, within this 60-second period, the entry door is re-opened, the panel will restart the exit delay sequence using the programmed exit delay time. This feature will only be activated once after arming.

Cross Zoning

UL

This feature is not suitable for use on a UL commercial burglary installation.

The Cross-Zoning feature is designed so that a combination of two zones must be faulted within a 5-minute period of each other to cause an alarm on either zone. This prevents momentary faults from one of the zones causing an alarm condition. You can select four "sets" of cross-zones, keeping in mind the following:

- Both must protect the same area.
- Both must be in the same partition.
- A fire zone must only be crossed to another fire zone protecting the same physical area **(see warning below).**

Note: The four sets of cross-zones are programmed in data fields 1*22, 1*23, 1*24, and 1*25.

DO NOT cross-zone a fire zone with a burglary zone under any circumstance. A fire zone must only be crossed to another fire zone and BOTH must be protecting the same physical area (no walls or partitions separating them). Consult NFPA 72 standard for exact spacing requirements. As a guideline, we recommend that spacing between fire cross-zones be no farther than 30 ft.

Conditions That Affect Cross-Zone Operation

1. In the event of a continuous fault (lasting at least 5 minutes) on one of the paired zones, a fault on the second zone will cause an alarm immediately.
2. If one of the zones in a pair is bypassed or has a zone response type set to 0, the cross-zoning feature will not apply.
3. If an entry/exit zone is paired with an interior follower zone, be sure to enter the entry/exit zone as the first zone of the pair. This will ensure that the entry delay time is started before the follower zone is processed.
4. If a relay is programmed to activate on a fault of one of the zones, the relay will activate without the other zone being faulted.
5. If a relay is programmed to activate on either an alarm or trouble, both zones must trip before the relay will activate, and both zones must restore for the relay to deactivate (if relay is programmed to deactivate on a Zone List Restore).

Call Waiting Defeat Logic

Although this option does not directly prevent false alarms, it may prevent the central station from taking action on a potential false alarm. After the panel's initial call to report the alarm, the panel may attempt to make an additional call, perhaps for a cancel or a zone restoral. If Call Waiting is not defeated, an operator at the central station attempting to contact the premises (to verify whether the alarm is valid) would hear the phone ringing indefinitely and have to dispatch on the call.

This option, enabled in program field 1*42, attempts to defeat Call Waiting on the first outgoing call attempt to both the primary and secondary numbers. It does this by dialing a special sequence preceding the phone number (but after the PABX number). The panel will dial *70 if using TouchTone and 1170 if using rotary.

The panel does not attempt to defeat Call Waiting on each call attempt because the phone company may not complete the call if the sequence is dialed on a phone line that does not have Call Waiting.

Installing The Control

In This Section

- *Mounting the Control Cabinet*
- *Installing the Cabinet Lock*
- *Grade A Mercantile Premises Listing*
- *Grade A Mercantile Safe and Vault Listing*
- *Installing the Control's Circuit Board*
- *Connecting the AC Transformer and Battery*
- *Panel Earth Ground Connections*

Mounting the Control Cabinet

- Mount the control cabinet to a sturdy wall using fasteners or anchors (not supplied) in a clean, dry area which is not readily accessible to the general public. The back of the control cabinet has 4 holes for this purpose.
- Before mounting the circuit board, remove the metal knockouts for the wiring entry that you will be using. DO NOT ATTEMPT TO REMOVE THE KNOCKOUTS AFTER THE CIRCUIT BOARD HAS BEEN INSTALLED.

Installing the Cabinet Lock

Use an ADEMCO No. N6277 Cam Lock and No. P3422-2 Clip for universal commercial cabinets.

1. Insert the key into the lock. Position the lock in the hole making certain that the latch will make contact with the latch bracket when the door is closed.
2. While holding the lock steady, insert the retainer clip into the retainer slots.

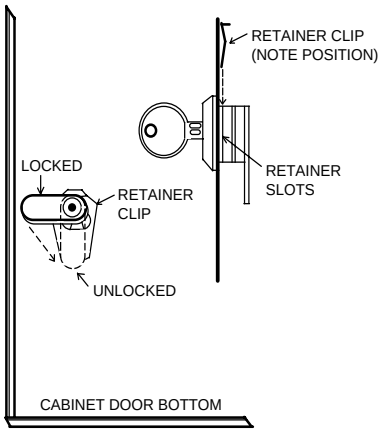

Figure 4-1: Installing the Lock

UL For UL installations which are intended to provide certificated burglary service, refer to the special requirements and Figure 4-2 Cabinet Attack Resistance Considerations.

Grade A Mercantile Premises Listing

- The panel door must be supervised. Mount the clip-on tamper switch (supplied) to the cabinet's right side wall as shown in the diagram below, and wire it to zone 6.
- Use a bell with a tamper-protected housing such as the ADEMCO AB12. The bell housing's tamper switch and inner tamper linings must also be wired to zone 6.
- Assign zone 6 to a burglary partition. Program it for day trouble/night alarm (zone type 5) when only one burglary partition is used. Program it for 24-hr. audible alarm (zone type 7) when more than one burglary partition is used. Enable the Zone 6 Alternate Tamper Function (program field 3*17).
- All wiring between the bell and panel must be run in conduit. Remaining wires do not need to be run in conduit.
- All wiring not run in conduit must exit from the knockout openings on the bottom or back of the cabinet.
- All unused knockouts must be plugged using the disc plugs and carriage bolts (supplied), as indicated in the diagram below.
- Fasten the cabinet door to the cabinet backbox using the 18 one-inch-long Phillips-head screws (supplied) after all wiring, programming and checkout procedures have been completed.

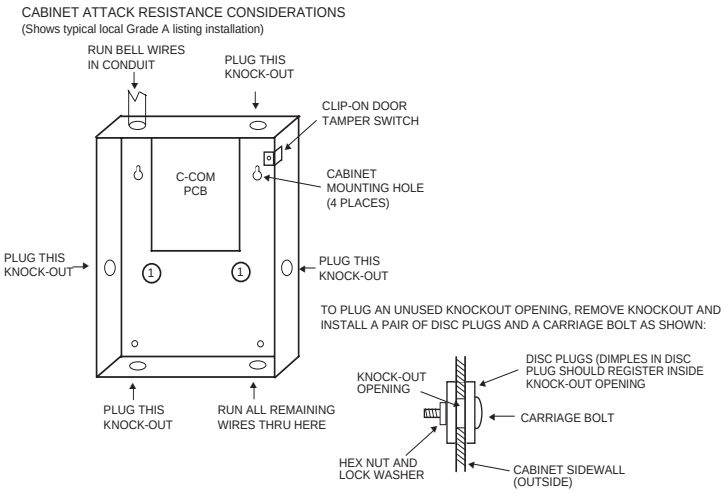

Figure 4-2: Cabinet Attack Resistance Considerations

Grade A Mercantile Safe and Vault Listing

- Follow the instructions given above for Mercantile Premises listing.
- Mount a shock sensor such as Sentrol No. 5402 to the control's backbox. Follow the manufacturer's instructions for proper sensor mounting. This sensor must also be wired to zone 6.
- For safe and vault applications, a UL Listed contact must be used inside the cabinet through one of the knockouts for pry-off tamper purposes. This sensor must also be wired to zone 6.

Installing the Control's Circuit Board

Refer to *Figure 4-3* when mounting the PC board.

- Hang the three mounting clips on the raised cabinet tabs. Make sure the clip orientation is exactly as shown in the diagram to avoid damage to the clip when the mounting screws are tightened. This will also avoid problems with insertion and removal of the PC board.
- Insert the top of the circuit board into the slots at the top of the cabinet. Make certain that the board rests in the slots as indicated.
- Swing the base of the board into the mounting clips and secure the board to the cabinet with the accompanying screws.

Make certain that the mounting screws are tight. This ensures that there is a good ground connection between the PC board and the cabinet. Also, dress field wiring away from the microprocessor (center) section of the PC board. Use the 2 loops on the left and right sidewalls of the cabinet for anchoring field wiring using tie wraps. These steps are important to minimize the risk of panel RF interference with television reception.

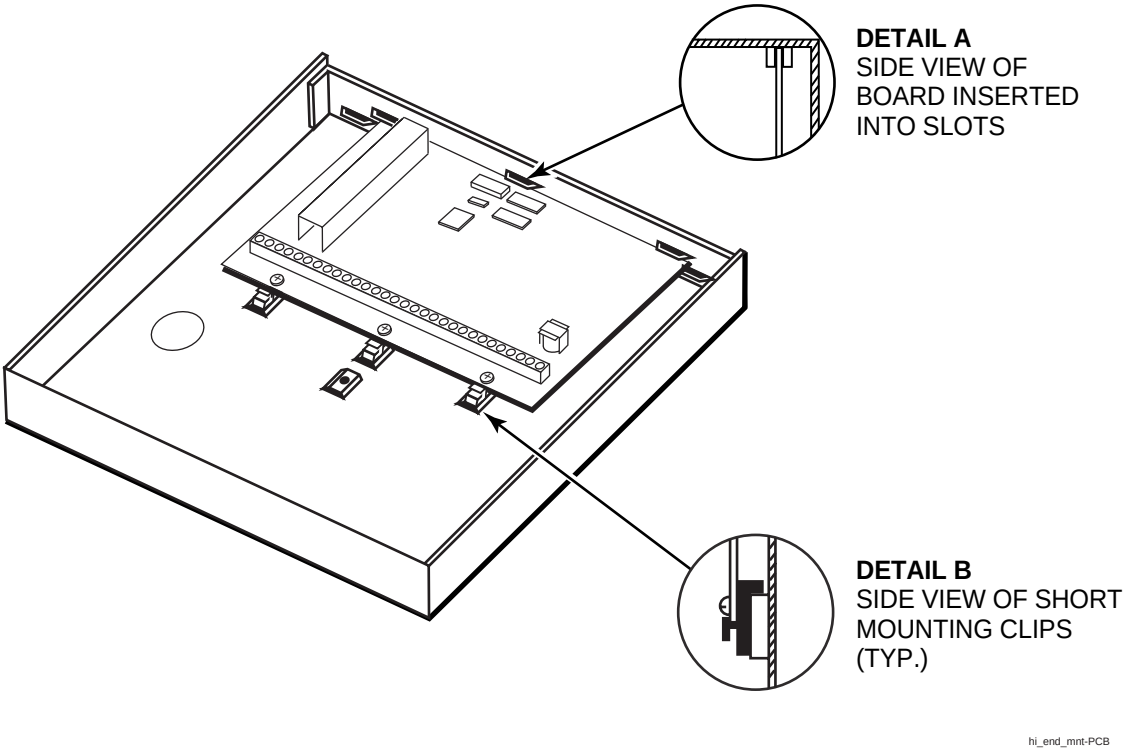

Figure 4-3: Mounting the PC Board

Connecting the AC Transformer and Battery

This product uses the 1451 Transformer, which must be hardwired into the premises' electrical system. Therefore, we recommend wiring all zones and expansion modules according to each section's instructions *before* powering up the system for programming and testing. Refer to the *Final Power-Up Procedure* section for specific instructions on how to connect the transformer and backup battery.

If desired, you can wire, program, and test each section individually by powering up temporarily for programming and testing each section before final power-up.

Refer to the *Final Power-Up Procedure* section for battery standby calculations and battery selection table.

Panel Earth Ground Connections

1. Connect the earth ground post inside the 1451 enclosure to a good earth ground (use grounding methods specified in the National Electric Code).
2. Use a green nut (supplied) to secure the wire to the ground post. The earth ground wire should be the only wire under this nut.
3. Run a 16AWG wire from this post to the panel's earth ground terminal (terminal 30). Use a second green nut (supplied) to secure this wire to the ground post. This method of connection avoids ground loops that may occur when the 1451 and panel are connected to different earth ground systems.

The panel requires this connection in order for its lightning transient protection devices and earth ground supervision to function properly.

Installing The Keypads

In This Section

- *Keypads That May Be Used*
- *Wiring to the Keypads*
- *Using a Supplementary Power Supply to Power Additional Keypads*
- *Mounting the Keypads*
- *Addressing the Keypads/Preliminary Checkout Procedure*

Keypads That May Be Used

- 2-line alpha display: 6139 (gray) or 6139R (red) (check with local AHJ for approval of keypad color)
- Up to 16 addressable keypads may be used in the system, independent of auxiliary power considerations (you may need to use an auxiliary power supply if the 1-amp aux. output is exceeded)

Wiring to the Keypads

1. Determine wire gauge by referring to the wiring length/gauge chart below.
2. Wire keypads to a single wire run or connect individual keypads to separate wire runs. The maximum wire run length from the control to a keypad, which is homerun back to the control must not exceed the lengths listed in the table.

Wire Run Length Table	
Wire Gauge	**Length**
#22 gauge	450 feet
#20 gauge	700 feet
#18 gauge	1100 feet
#16 gauge	1750 feet

1. The length of all wire runs combined must not exceed 2000 feet when unshielded quad conductor cable is used (1000 feet if unshielded cable is run in conduit or if shielded cable is used).
2. If more than one keypad is wired to a run, then the above maximum lengths must be divided by the number of keypads on the run (e.g., the maximum length is 225 feet if two keypads are wired on a #22 gauge run).

3. Run field wiring from the control to the keypads (using standard 4-conductor cable of the wire gauge determined in step 1).

4. If using only one keypad, it may be connected to either Keypad Port 1 or 2, and must be mounted on, or within 3 ft. of, the cabinet. If using multiple keypads, connect one to Keypad Port 2 and mount it on, or within 3 ft. of, the cabinet. Set the main keypad to an address of 00. (This address cannot be disabled in programming.) Additional keypads can be mounted where desired, and must be connected to Keypad Port 1 terminals (11, 12, 13, 14), as shown in *Figure 5-1*. The keypad on Port 2 is electrically isolated from those on Port 1 and will continue to function even if wiring problems prevent the other keypads from working properly.

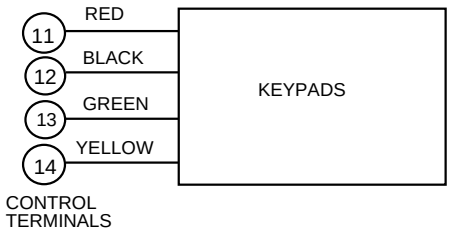

Figure 5-1: Keypad Connections To Keypad Port 1.

Using a Supplementary Power Supply to Power Additional Keypads

The control provides 1 amp of auxiliary standby power for powering keypads and other devices from the auxiliary power output. Aside from this, the control can support up to 16 peripheral devices (keypads, RF receivers, relay modules, etc.). The backup battery will supply power to these devices in the event that AC power is lost. A 1-amp load requires a 34.4 AH battery (see the *Final Power-Up Procedure* section for more information).

When the control's auxiliary power load for all devices exceeds 1 amp, you can power additional keypads from a regulated, 12VDC power supply (e.g., Alarm-Saf Model AS/PS5-BFS-12-UL). Use a UL Listed, battery-backed supply for UL installations.

Connect the additional keypads as shown in *Figure 5-2*, using the keypad wire colors shown. Be sure to observe the current ratings for the power supply used.

1. Make connections directly to the screw terminals as shown in Figure 5-2. Make no connection to the keypad blue wire (if present).
2. Be sure to connect the negative (–) terminal on the power supply unit to terminal 12 (AUX –) on the control.

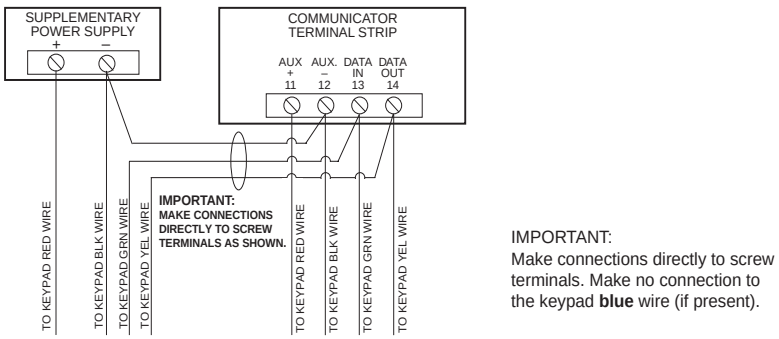

Figure 5-2: Using a Supplementary Power Supply for Keypads

Mounting the Keypads

Mount the keypads at a height that is convenient for the user. Refer to the instructions provided with the keypad for mounting procedure.

You can either surface-mount or flush-mount keypads (using the 6139TRK Trim Ring Kit). Refer to the mounting instructions and template included with the keypad and/or trim ring kit for specific information.

Addressing the Keypads/Preliminary Checkout Procedure

If you want to check that the system is working before connecting field wiring from zones and devices, do the following:

1. Temporarily connect a 2000-ohm end-of-line resistor across each of the basic hardwire Zones 1–8, as shown in the Summary of Connections diagram. Without actual zone wiring or EOL resistors connected, the keypads will not display the “READY” message.
2. Power up the system temporarily.

The keypads will not operate until they are physically addressed and enabled in the system's Device Programming in the #93 Menu Mode (refer to the Programming Guide).

3. Set each keypad to an individual address (00-30) according to the keypad's instructions. Set an alpha keypad for address 00 and other keypads for higher addresses (00 and 01 are enabled in the system's default program). Any keypads set for address 02 and above will appear blank until they are enabled in the system's program. Each keypad must be set for a different address.

Keypads set to the Nonaddressable Mode (address 31) will interfere with other keypads (as well as other devices) connected to the keypad terminals.

4. After addresses are set, the green READY LED should light, and the words “DISARMED...READY TO ARM” should be displayed on keypads set to addresses 00, and 01.
5. If the “READY” message does not appear on any of the keypads in the system (in either of the partitions), or a “NOT READY” message is displayed, check the keypad wiring connections. Make sure each of the 8 basic hardwired zones has a 2000-ohm resistor connected across its terminals.
6. When the proper “READY” message is displayed on the keypad(s) addressed at 00, and 01, the system is functioning properly.
7. Do not remove the EOL resistors until you are ready to make connections to the hardwired zones, to allow for testing (described later in the manual).

If an “OC” or “OPEN CIRCUIT” message is present on the keypad, data from the control is not reaching the keypad. Please check your wiring.

Basic Hardwired Zones 001-008

In This Section

- *Common Characteristics of Hardwired Zones 1-8*
- *Wiring Burglary and Panic Devices to Zones 1-8*
- *Wiring 2-Wire Smoke Detectors to Zones 1 and 2*
- *Compatible 2-Wire Smoke Detectors*
- *Wiring 4-Wire Smoke Detectors to Zones 1-8*
- *Compatible 4-Wire Smoke Detectors*
- *Fire Alarm Verification for Smoke Detectors*
- *Zone 6 Tamper Configuration*
- *Wiring 2-Wire Latching Glassbreak Detectors to Zone 8*
- *Compatible Glassbreak Detectors*
- *Checkout Procedure for Hardwired Zones*

Common Characteristics of Hardwired Zones 1-8

- EOLR supervision (optional for zones 3-8) supporting N.O. or N.C. sensors (EOLR supervision required for fire and UL Burglary installations)
- Individually assignable to one of 8 partitions
- Up to 16 2-wire smoke detectors each on zones 1 and 2 (32 total)
- 4-wire smoke or heat detectors on zones 1-8 (power to 4-wire smoke detectors must be supervised with an EOL device)
- Up to 50 2-wire latching glassbreak detectors on zone 8
- Individually assignable to bell outputs and/or aux. relay

Wiring Burglary and Panic Devices to Zones 1-8

1. Connect sensors/contacts to the hardwire zone terminals (15 through 27).
2. Connect N.C. devices **in series** with the high (+) side of the loop. The 2K EOL resistor must be connected in series with the devices, following the last device.
3. Connect N.O. devices **in parallel (across)** the loop. The 2K EOL resistor must be connected across the loop wires at the last device.

The maximum zone resistance is 100 ohms for zones 1, 2 and 8, and 300 ohms for all other zones (excluding the 2K EOL resistor).

Wiring 2-Wire Smoke Detectors to Zones 1 and 2

Zones 1 and 2 have the added capability of supporting 2-wire smoke detectors. Each zone provides enough standby current (2 mA) to power up to sixteen of the smoke detectors listed below. **Each zone provides only enough alarm current (20 mA) to power one smoke detector in the alarmed state.** When assigned zone type 9 or 16, the second entry of a User Code + OFF sequence at a keypad will interrupt power to these zones to allow detectors to be reset following an alarm.

1. Connect 2-wire smoke detectors across zone 1 and/or zone 2 terminals (15 through 18) as shown in *Figure 6-1*. Observe proper polarity when connecting the detectors.
2. If EOL resistors are presently connected across zone 1 and zone 2 terminals, remove them. **The EOL resistors must be connected across the loop wires of each zone at the last detector.**

2K EOLR resistors must be used on fire zones (standard, discrete 2K EOLR resistors may be used on burglary and panic zones) and must be connected across the loop wires of each zone at the last detector.

The alarm current provided by zones 1 and 2 will support only one smoke detector each in the alarmed state.

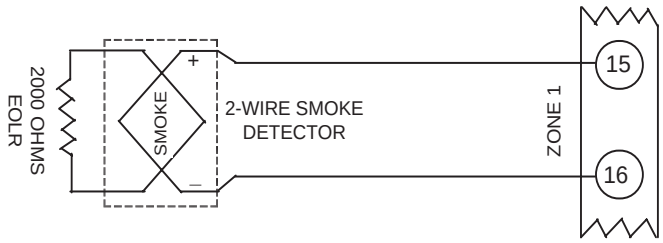

Figure 6-1: 2-Wire Smoke Detector Connected to Zone 1 (can also be connected to Zone 2)

Compatible 2-Wire Smoke Detectors

You may use up to 16 2-wire smoke detectors each on zones 1 and 2 listed in the table below.

DETECTOR TYPE	DEVICE MODEL #	DETECTOR TYPE	DEVICE MODEL #
Photoelectric, direct wire	System Sensor 2400	Photoelectric duct detect. w/DH400 base	System Sensor 2451
Photoelectric w/heat sensor, direct wire	System Sensor 2400TH	Ionization duct detector w/DH400 base	System Sensor 1451DH
Photoelectric w/B401B base	System Sensor 2451	Ionization, direct wire	System Sensor 1100
Photoelectric w/heat sensor and B401B base	System Sensor 2451TH	Ionization w/B110LP base	System Sensor 1151
Ionization, direct wire	System Sensor 1400	Photoelectric, direct wire	System Sensor 2100
Ionization w/B401B base	System Sensor 1451	Photoelectric w/heat sensor, direct wire	System Sensor 2100T
Photoelectric duct detect. w/DH400 base	System Sensor 2451	Photoelectric w/B110LP base	System Sensor 2151

UL These smoke detectors are UL Listed for use with the VISTA-128FB and are the only 2-wire smoke detectors that may be used.

Wiring 4-Wire Smoke Detectors to Zones 1-8

When programmed for fire warning usage, all zones can monitor 4-wire smoke detectors (zone types 9, 16), N.O. fire alarm initiating devices (zone types 9, 17), or N.O. sprinkler system supervisory devices (zone type 18).

You may use as many 4-wire smoke detectors as can be powered from the panel's Auxiliary Power 1 output without exceeding the output's rating (see the *Final Power-Up Procedure* section for auxiliary power ratings).

Auxiliary power to 4-wire smoke detectors is not automatically reset after an alarm, and therefore must be momentarily interrupted using the built-in auxiliary relay as described below. This allows the detectors to be reset via the second entry of a User Code + OFF sequence. Field 3*61 Aux Relay Function must be programmed as a 2.

1. Connect 12-volt power for the detectors as follows: Wire the [+] side of Auxiliary Power (Terminal 10) to the N.C. contact of the Aux. Relay (Terminal 9). Wire the Pole of the Aux Relay (Terminal 8) to the [+] Power side of the smoke detector. Connect the [-] side of the smoke detector to [-] Aux. Power (Terminal 12). Observe proper polarity when connecting detectors (see *Figure 6-2*).

UL Power to 4-wire smoke detectors must be supervised with an EOL device (use a System Sensor A77-716B EOL Relay Module connected as shown in Figure 6-2).

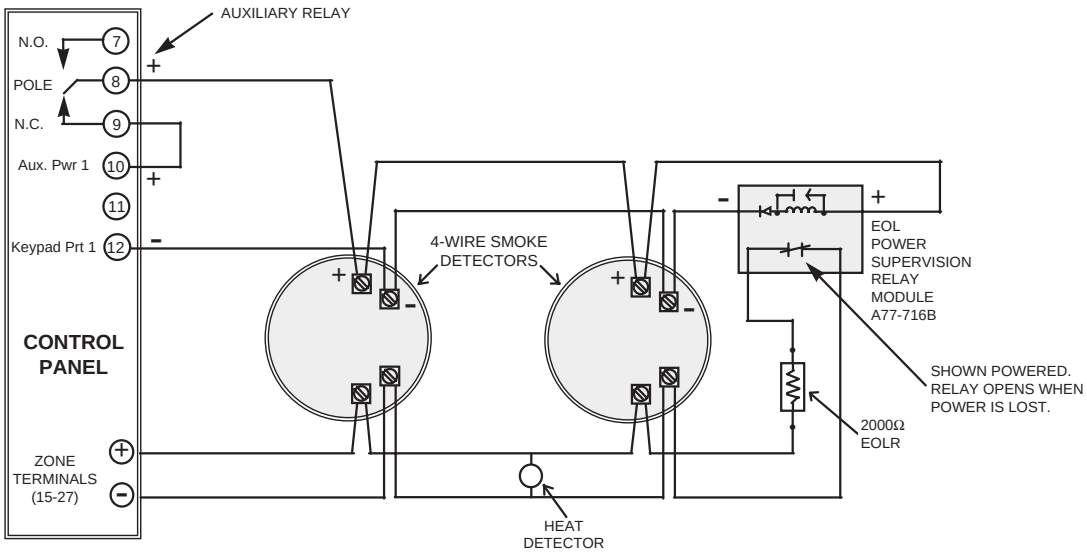

Figure 6-2: 4-Wire Smoke Detector Connections (Zones 1-8)

2. Connect detectors (including heat detectors, if used) across terminals of the zone selected. See *Figure 6-2*. All detectors must be wired in parallel. Remove the 2000-ohm EOL resistor if connected across the selected zone terminals. ***You must connect the EOL resistor across the loop wires at the last detector***.

Compatible 4-Wire Smoke Detectors

Use any UL Listed 4-wire smoke detector which is rated for 10-14VDC operation and which has alarm reset time not exceeding 6 seconds. Some compatible 4-wire smoke detectors are listed below.

Photoelectric, direct wire	System Sensor 2412
Photoelectric w/heat sensor, direct wire	System Sensor 2412TH
Ionization, direct wire	System Sensor 1412

Fire Alarm Verification for Smoke Detectors

This feature applies to any hardwired or polling loop fire zone set to zone type 16. For 4-wire smoke detectors, the power must be interrupted by the system's auxiliary relay (field 3*61 = 2). The control panel will “verify” any alarm by resetting the smoke detectors after the first alarm trigger, and then waiting 90 seconds for a second alarm trigger. If the smoke detector or thermostat does not trigger again, the control will disregard the first trigger, and no alarm signal will occur. This feature eliminates false alarms due to electrical or physical transients.

Zone 6 Tamper Configuration

Zone 6 may be used as a tamper loop for the VISTA-128FB Cabinet Door Tamper Switch and for the ADEMCO AB12 Grade A Burglary Bell Box Tamper Switches and Tamper Liner. The bell housing's tamper switch and inner tamper linings must also be wired to zone 6.

Assign zone 6 to a burglary partition. Program it for day trouble/night alarm (zone type 5) when only one burglary partition is used. Program it for 24-hr. audible alarm (zone type 7) when more than one burglary partition is used. Enable the Zone 6 Alternate Tamper Function (program field 3*17).

When set in this manner, the zone will trigger a trouble when the panel is disarmed and an alarm when the panel is armed, when the zone senses either an open or a short, or when an earth ground fault caused by drilling through the AB12 housing is detected. See the *External Sounders* section, for information on AB12 bell wiring.

Wiring 2-Wire Latching Glassbreak Detectors To Zone 8

Use zone 8 for connection of compatible 2-wire latching-type glassbreak detectors. Wire as follows:

1. Connect all detectors in parallel across zone 8 (terminals 26 and 27). See *Figure 6-3.*

Remove the 2000-ohm EOL resistor if connected across the selected zone terminals. You must connect the EOL resistor across the loop wires at the last detector.

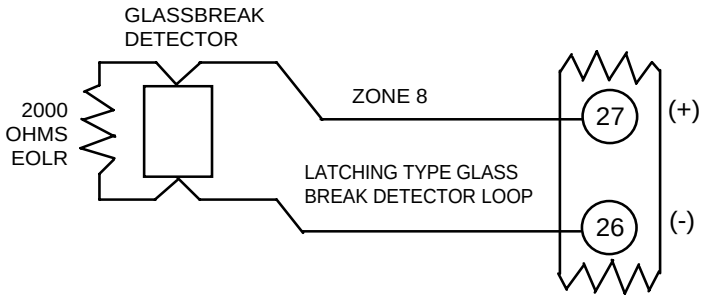

Figure 6-3: Wiring Latching Glassbreak Detectors to Zone 8

After an alarm, the first code + OFF turns off the siren and disarms the system; the second code + OFF clears the memory of alarm and resets the glassbreak detector.

Compatible Glassbreak Detectors

Use detectors that meet the following ratings:

Standby Voltage:	5VDC–13.8VDC
Standby Resistance:	Greater than 20k ohms (equivalent resistance of all detectors in parallel)
Alarm Resistance:	Less than 1.1k ohms (see note below)
Alarm Current:	2mA–10mA
Reset Time:	Less than 6 seconds

The IEI 735L Series detectors have been tested and found to be compatible with these ratings. You can use up to 50 IEI 735L Detectors connected in parallel.

1. The alarm current provided by zone 8 will support only one glassbreak detector in the alarmed state.
2. Do not use other N.O. or N.C. contacts when using glassbreak detectors on zone 8. Other contacts may prevent proper glass break detector operation.

You can use detectors which exceed 1.1k ohms in alarm, provided they maintain a voltage drop of less than 3.8 volts in alarm.

Checkout Procedure for Hardwired Zones

After installation of all hardwired zones is complete, each partition of the security system should be checked as follows:

1. Make certain that all devices and sensors connected to the hardwired zones are not in a faulted state. Doors and windows with contacts should be closed, PIRs should be covered (use a cloth to mask them temporarily, if necessary).
2. With all hardwired zones intact, the alpha keypads connected to the system should display:

   DISARMED
   READY TO ARM.

   If the following is displayed instead, press the [✳] key to display the faulted zone(s).

   DISARMED Press ✳
   to show faults

   Restore any faulted zone(s) as necessary (also make sure that you have connected a 2000-ohm EOL resistor across the terminals of unused zones). When the "DISARMED...READY TO ARM" message is displayed, you can proceed to the next step.
3. Fault and then restore every contact or sensor on each zone individually to ensure that it is being monitored by the system. Each time a zone is faulted, the keypads in the partition to which the zone is assigned should display the number of the faulted zone. **Tripping fire and panic zones will cause external sounders to sound and may trigger the dialer.** When each zone is restored, the "READY TO ARM" message should appear again.

If a zone or zones are not displayed at the correct partition's keypad(s), check both keypad and zone programming to verify the correct partition assignment.

When you get the proper displays on the keypad(s), the hardwired zones in the system are functioning properly.

4. Power down and continue to the next section.

2-Wire Polling Loop Expansion (Zones 009 - 128)

In This Section

- *Polling Loop Overview*
- *Common Characteristics of Polling Loop Zones*
- *Wiring/Addressing RPM Devices*
- *Polling Loop Supervision*
- *Checkout Procedure for Polling Loop Zones*
- *Compatible Polling Loop Devices*

Polling Loop Overview

You can expand the system from the basic 8 zones to up to 128 zones using the built-in 2-wire polling loop. Each device that is connected to the polling loop has the capability to communicate with the panel about its status. These devices are called RPMs (Remote Point Modules). The polling loop provides both power and data to the RPM zones, and is constantly monitoring the status of all zones enabled on the loop. The maximum current draw of all devices on the polling loop cannot total more than 128mA (unless using a 4297 Polling Loop Extender Module).

Refer to the list of compatible devices at the end of this section.

Common Characteristics of Polling Loop Zones

Polling loop zones have the following characteristics:

- Must use RPM (Remote Point Module) devices
- Supervised by control panel
- Individually assignable to one of 8 partitions
- Individually assignable to bell outputs and/or aux. relay
- Polling loop smoke detector LED will latch on the first detector to go into alarm. Clearing alarm memory clears the latched LED.
- Polling loop smoke detector LED periodically flashes to indicate communication with the control.

Wiring/Addressing RPM Devices

All devices on the polling loop must be wired in parallel to the [+] and [-] polling loop terminals of the control panel (28 and 29). You can wire from device to device, or have multiple branches connected directly to the control panel in a star configuration, as shown in *Figure 7-1*.

Although each polling loop device is wired in parallel, each device has its own unique zone number (or group of zones if it is a zone expansion device). On some devices, this is determined by the setting of DIP switches. Other devices have a built-in unique serial number which must be enrolled into the control as the zone number desired. Set up the polling loop as follows:

1. Run wires to each device on the polling loop. No individual wire run may exceed the lengths given in the table to follow. In addition, no more than 64mA may be drawn on any individual wire run. When a star configuration is used, the total length of all wire runs combined cannot exceed 4000 ft (2000 ft. if using unshielded wire in conduit or shielded wire). Twisted-pair is recommended for all normal wire runs.

Maximum Polling Loop Wire Runs

Wire Gauge	Max. Length
#22 gauge	650 feet
#20 gauge	950 feet
#18 gauge	1500 feet
#16 gauge	2400 feet

When running polling loop wires, they must not be run within 6" of AC power, telephone, or intercom wiring. Since the polling loop is carrying data between the control panel and the devices, interference on this loop can cause an interruption of this communication. The polling loop can also cause outgoing interference on the intercom or phone lines. If this spacing cannot be achieved, shielded wire must be used. (Note that the maximum total wire length supported is cut in half when shielded wire is used.)

2. Wire each device to the polling loop, making sure to use correct polarity when making connections (refer to the device's instructions). **If you are using serial number devices, and intend to have the control enroll each serial number automatically, wire no more than 25 of these devices to the control at a time.** Then power up and program them (as described in *Zone Programming* of the *#93 Menu Mode Programming* section of the *Programming Guide*) before connecting the next 25. Leave previously enrolled devices connected.

3. If you intend to manually enter the serial numbers through the keypad or through Compass downloading software, all the devices may be connected before powering up to program.

4. Note the polling loop devices that have DIP switches on them. Set each device's DIP switches for the zone number you are assigning it. Refer to the device's instructions or the DIP Switch Tables at the end of this manual when setting addresses.

   Certain polling loop devices, such as the 4193SN and 4191SN, do not have DIP switches. Instead, they have embedded serial numbers which must be "enrolled" by the control during *Zone Programming in the #93 Menu Mode* (refer to the *Programming Guide*).

Certain polling loop devices have a DIP switch which can be used either to select the device's zone number or to select the enrolling of a unique, embedded serial number by the control panel. When used with VISTA-128FB, these devices must be set for the serial number mode of operation.

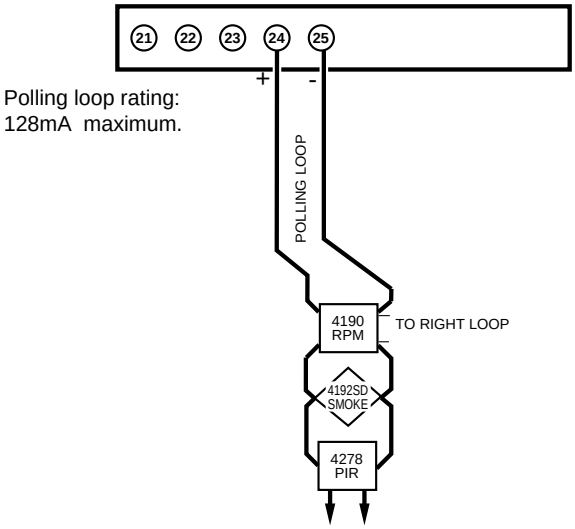

Figure 7-1: Polling Loop Connections

The 4297 Polling Loop Extender may be used to provide additional polling loop current, to extend the polling loop wire run length, and/or to provide individual electrically isolated polling loops. Refer to *Figures 7-2 and 7-3*, to follow.

DO NOT use the 4197 Polling Loop Extender module with the VISTA-128FB.

Be sure to include the total current drawn on the polling loop when figuring the total auxiliary load on the panel's power supply (use the Auxiliary Current Draw Worksheet in the Final Power-Up Procedure section.

Notes: - Do not use the 4197 module with VISTA-128FB.
- Refer to 4297 instructions for more detailed installation information.
The limits shown below supercede the limits described in the 4297 instructions.
- Do not connect 4297 modules in series.

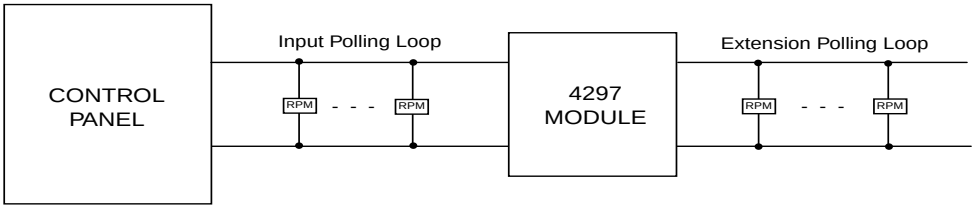

Input Loop Limits:
- 128mA max. No more than 64mA on any individual wire run.
- No individual wire run may exceed:

Gauge	Length
#22	650 ft.
#20	950 ft.
#18	1500 ft.
#16	2400 ft.

- Total length of all wire runs combined cannot exceed 4000 ft. (2000 ft. if using unshielded wire in conduit or shielded wire).

Extension Loop Limits:
- Same as for the input polling loop.

Combined Input and Extension Polling Loop Limits:
- No more than 120 devices combined.
- Total length of all wire runs on all loops combined cannot exceed 6400 ft. (3200 ft. if using unshielded wire in conduit or shielded wire)

Figure 7-2: Polling Loop Connections Using One 4297 Extender Module

Notes: - Do not use 4197 module with VISTA-128FB.
- Refer to 4297 instructions for more detailed installation information.
The Limits shown below supercede the limits described in the 4297 instructions.
- Do not connect 4297 modules in series.

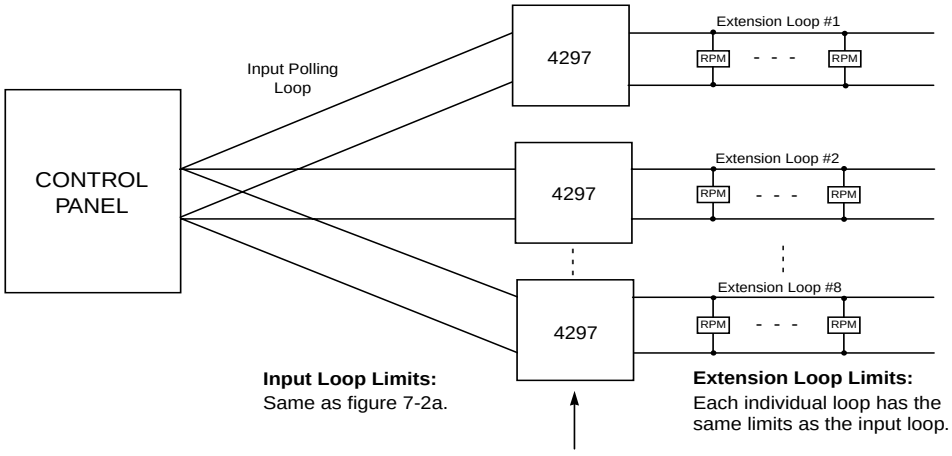

Input Loop Limits:
Same as figure 7-2a.

Extension Loop Limits:
Each individual loop has the same limits as the input loop.

Up to 8 modules may be connected in parallel. Extension loops will be electrically isolated if blue jumper on each 4297 is left in tact.

Combined Input and Extension Loop Limits:
- No more than 120 devices combined on all loops
- To calculate the maximum wire run allowed on each extension loop:
  1. Determine the total wire length of all input loops combined.
  2. Subtract this number from 6400 ft. (3200 ft. for shielded cable or unshielded cable in conduit).
     The result is the maximum wire run length for each extension loop.

Figure 7-3: Polling Loop Connections Using Multiple Extender Modules

Polling Loop Supervision

A short on the polling loop is indicated by a trouble on its supervisory zone (zone 997), and reports as a trouble condition only. As such, a polling loop should be assigned either zone type 05 or type 19 if annunciation as a trouble condition is desired.

If a device on the polling loop fails (the panel cannot "see" that device), the partition or partitions that use that device will display a trouble condition for all zones associated with that device. If the panel is armed when a device fails, and the zone is programmed as a burglary type, the zones associated with that device will cause an alarm on the corresponding partition(s). Otherwise the zone will generate a trouble condition.

A trouble on zone 997 will not prevent a partition from being armed, as long as all polling loop zones on that partition are bypassed.

Checkout Procedure for Polling Loop Zones

After installation of all polling loop zones is complete, each partition of the security system should be checked as follows:

1. Be sure that all devices and sensors connected to the polling loop are not in a faulted state. Doors and windows with contacts should be closed, PIRs should be covered (use a cloth to mask them temporarily, if necessary).
2. With all hardwired and polling loop zones intact, the alpha keypads connected to the system should display:

   DISARMED
   READY TO ARM.

3. If the keypad(s) begins beeping and displays the word "CHECK" or "TRBL" along with a zone or zone numbers, the system either ***does not see*** the displayed zone(s) or the tamper switches are tripped. Please check your DIP switch settings for the zone(s), your connections, and/or that the covers for the units with tamper switches are in place. Once the situation has been corrected, enter the [User Code] + [OFF] sequence twice to clear the trouble.
4. If the following is displayed, press the [*] key to display the faulted zone(s):

   DISARMED Press ✳
   to show faults

5. Restore any faulted zone(s) as necessary. When the “DISARMED...READY TO ARM” message is displayed, you can proceed to the next step.
6. Fault and then restore every contact or sensor on each zone individually to ensure that it is being monitored by the system. Each time a zone is faulted, the keypads in the partition to which the zone is assigned should display the number of the faulted zone. **Tripping fire and panic zones will cause external sounders to sound and may trigger the dialer.** When each zone is restored, the “READY TO ARM” message should appear again.

If a zone or zones are not displayed at the correct partition's keypad(s), check both keypad and zone programming to verify the correct partition assignment.

When you get the proper displays on the keypad(s), the polling loop zones in the system are functioning properly.

7. Power down and continue to the next section.

UL

- The 4208 must be mounted either inside the VISTA-128FB cabinet or in a separate enclosure which has a tamper-supervised cover.
- The 4190WH right loop must not be used, and the left loop must be EOLR-supervised.
- The 4278 Auxiliary Sensor Loop cannot be used.
- The 4194 is not UL Listed.
- The 4297 must be powered from the VISTA-128FB Auxiliary Power Output or from a UL Listed supplementary power supply.
- For commercial fire installations, only the first 6 zones (which utilize 4.7k resistors) on a 4208 Zone Expander may be used. The last two zones may not be used.

Compatible Polling Loop Devices

4208	**8-Zone Expander**	• Accommodates up to 8 zones via the polling loop. • DIP switch-programmable. • The first two zones can be either normal or fast response (DIP switch-selectable). • All zones are EOLR-supervised (first six zones = 4.7k ohms; last two zones = 30k ohms), provided with the 4208.
4190WH	**2 –Zone Expander**	• Accommodates up to 2 zones via the polling loop. • DIP switch-programmable. • The left zone can be EOLR-supervised (required in UL installations), can accept either open or closed circuit sensors, and can be set for fast response. • The right zone is unsupervised and can accept closed circuit sensors only (cannot be used in UL installations).
4278	**Quad PIR**	• Quad element PIR with built-in RPM (connects directly to the polling loop). • DIP switch-programmable. • Includes mirrors for both wide-angle and curtain/long-range applications. • Features an auxiliary sensor loop that is nonsupervised and can accept closed circuit sensors only (cannot be used in UL installations).
4939SN-BR **4939SN-GY**	**Serial Number Surface Mount Reed Contacts**	• Compact surface-mount magnetic reed contact with built-in RPM. • Serial Number ID programmed by control panel.

Compatible Polling Loop Devices (continued)

4275	**Dual PIR**	• Dual-element PIR with built-in RPM (connects directly to the polling loop). • DIP switch-programmable. • Includes mirrors for both wide-angle and curtain/long-range applications and can use the 1875PA Pet Alley mirror. • Built-in selectable pulse count capability.
4194	**Surface Mount Reed Contact (Wide Gap)**	• Wide-gap, surface-mounted reed contact with built-in RPM (connects directly to the polling loop). • DIP switch-programmable.
4297	**Extender Module**	• Used to increase the polling loop current (128mA), to extend the polling loop wire run length, and/or to provide individual, electrically isolated loops. • Connects to the polling loop and is powered from panel's auxiliary power or by a separate power supply with battery backup.
4192SD **4192SDM** **5192**	**Photoelectric Smoke Detector Devices**	• One-piece photoelectric smoke detector with built-in RPM. • DIP switch-programmable. • 4192SDM provides maintenance signals.
4192SDT **4192SDTM**	**Photoelectric Smoke Detector w/Heat Detector**	• One-piece photoelectric smoke detector with 135°F (57°C) heat detector and built-in RPM. • DIP switch-programmable. • 4192SDTM provides maintenance signals.
4192CP **4192CPM**	**Ionization Smoke Detector**	• One-piece products of combustion ionization detector with built-in RPM. • DIP switch-programmable. • 4192CPM provides maintenance signals.
4101SN	**Serial Number Single Output Relay Module**	• Form C relay rated at 2A, 28VAC/VDC with contact supervision. • One class B/style B EOLR-supervised aux input zone. • Serial Number ID programmed by control panel. • Tamper-protected cover.
4191SN-WH	**Serial Number Recessed Reed Contact**	• Recessed (1/2” dia.) magnetic reed contact with built-in RPM. • Serial Number ID programmed by control panel.
4959SN	**Aluminum Overhead Door Contact**	• 24-inch armored cable • Serial Number ID programmed by control panel.

Compatible Polling Loop Devices (cont'd)

4208U	**Universal 8-Zone Expander**	• Uniquely identifies 8 EOLR supervised zones (all zones use 10k resistors, supplied). • Can be used in zone assignment mode or serial number mode. • When used in the serial number mode, each serial number in the selected group can be assigned to any zone number. • Loops A&B can be programmed for fast (10msec) response. • Can be optionally powered from an external DC power supply to reduce current draw from the polling loop. • Tamper protected
4209U	**Universal Group Zoning Module**	• Uniquely identifies 4 supervised zones or 2 supervised zones in the "grouped" mode (groups 2 supervised zones into one zone). • Supports up to 16 2-wire smoke detectors on each of its 4 loops, regardless of group setting. • Can be used in zone assignment mode or serial number mode. • When used in the serial number mode, each serial number in the selected group can be assigned to any zone number. • Tamper protected.
4193SN	**Serialized 2-Zone Expander**	• Two-zone expander used to connect alarm sensing devices to control panels. • Can be configured as one supervised zone (10K EOLR) and one unsupervised zone, or two unsupervised zones (normally closed devices only). • Serial number ID programmed by control panel.
4293SN	**Serialized 1-Zone Expander**	• Single-zone expander used to connect alarm-sensing devices to control panels. • Can be configured as one unsupervised zone (normally closed devices only). • Serial number ID programmed by control panel.
7500	**Single Technology Glass Break Detector**	• Glassbreak detector with built-in RPM. • DIP switch programmable.
9500	**Dual Technology Glass Break Detector**	• Dual technology glass-break detector with built-in RPM • DIP switch programmable.

UL Models 7500 and 9500 glassbreak detectors are not UL Listed.

Wireless Zone Expansion

In This Section

- *Characteristics of Wireless Zones*
- *RF System Operation and Supervision*
- *RF System Installation Advisories*
- *Installation and Setup of the 5881 RF Receiver*
- *Installing the 5800TM Module*
- *House ID Sniffer Mode*
- *5800 Series Transmitter Setup*
- *Compatible 5800 Series Transmitters*
- *Checkout Procedure for Wireless Zones*

Characteristics of Wireless Zones

The VISTA-128FB supports wireless zones that may be used exclusively or in addition to hardwire and/or polling loop zones.

- Supervised by control panel for check-in signals (except certain non-supervised transmitters)
- Individually assignable to one of 8 partitions
- Individually assignable to bell outputs and/or aux. relay
- Individually assignable to access points

UL Wireless devices may not be used in UL commercial burglary installations.

The following receivers may be used with this system and supports the number of zones shown below:

Receiver	Zones
5881L	up to 8
5881M	up to 16
5881H	up to 128
5881EH	up to 128 (use w/UL864 installations)

In Canada, 5800 systems must use 5882 Series receivers: 5882L/5882H. Information in this manual relative to the 5881 Receivers applies as well to the 5882 Receivers. 5881 and 5882 Receivers all use the same transmitters.

RF System Operation and Supervision

- The receiver responds to status and alarm signals from wireless transmitters (at 345MHz in the USA; 315MHz in Canada) within a nominal range of 200 feet, and relays this information to the control.
- Each supervised transmitter sends a supervisory signal to the receiver every 70-90 minutes. If, after a programmed interval of time (e.g., 12 hrs), the receiver does not hear from a *particular* transmitter, the word "CHECK" or "TRBL" will appear at the corresponding partition's keypad(s) accompanied by the zone number in question. The trouble will not prevent you from arming the panel, but the zone must first be bypassed.
- Zones 988 and 990 are used to supervise the RF reception of receivers 2 and 1, respectively. The reception is supervised for two conditions.
  1. If, within a programmed interval of time (defined by program field 1*30), the receiver does not hear from *any* of its transmitters. A "CHECK" or "TRBL" message will appear for zones 988 (2nd receiver) or 990 (1st receiver) if response type 19 is assigned to these supervisory zones and if programmed, Contact ID event code 333 is sent to the central station. This message is an indication that the RF receiver is "deaf." The fault may be accompanied by a supervision fault for one or more RF transmitters.
  2. If, the receiver has detected a condition that may impede proper RF reception (i.e., jamming or other RF interference). The control checks the receiver for this condition every 45 seconds. A "CHECK" or "TRBL" message will appear for zones 988 (2nd receiver) or 990 (1st receiver) if response type 19 is assigned to these supervisory zones and if programmed, Contact ID event code 344 is sent to the central station

UL

A response type must be programmed for zones 990 (1st receiver) and 988 (2nd receiver) if being used, for UL commercial fire and burglary installations.

- The control checks the receiver connections about every 45 seconds. If the panel has lost communication with the receiver, a "CHECK" or "TRBL" message will appear for the respective receiver supervisory zone (8 + 2-digit receiver device address; for example, Device address 05 = supervisory zone 805). Supervisory zones must be programmed for 24-hour trouble (type 19). The "CHECK" or "TRBL" display may be an indication that the wiring to the receiver is incorrect, or that the DIP switches are not set for the same address the receiver was assigned to in the control's *Device Programming* in the *#93 Menu Mode* (refer to the *Programming Guide*).
- Two identical receivers can be used to provide either a greater area of coverage or redundant protection.
- Any zone from 1 to 128 can be used as a wireless zone, with the exception of zone 64 (reserved for a wireless keypad).

RF System Installation Advisories

1. Place the receiver in a high, centrally located area for best reception. Do not place it on or near metal objects. This will decrease the range and/or block transmissions.
2. For maximum range, install the RF receiver at least 10 feet from the control panel or any keypads to avoid interference from the microprocessors in these units.
3. If dual receivers are used:
   A. Both must be at least 10 feet from each other, as well as from the control panel and remote keypads.

B. Each receiver must be set to a different device address. The receiver set to the lower address is considered the 1st RF receiver for supervisory purposes.

C. The House IDs must be the same.

D. Using two receivers *does not* increase the number of transmitters the system can support (128 zones using the 5881H, plus a wireless keypad).

Installation and Setup of the 5881 RF Receivers

1. Mount the receiver. Receivers must be mounted externally to the control and can detect signals from transmitters within a nominal range of 200 feet. Take this into consideration when determining mounting location.
2. Connect the receiver's wire harness to the Keypad 1 terminals (11, 12, 13, 14). Plug the connector at the other end of the harness into the receiver.

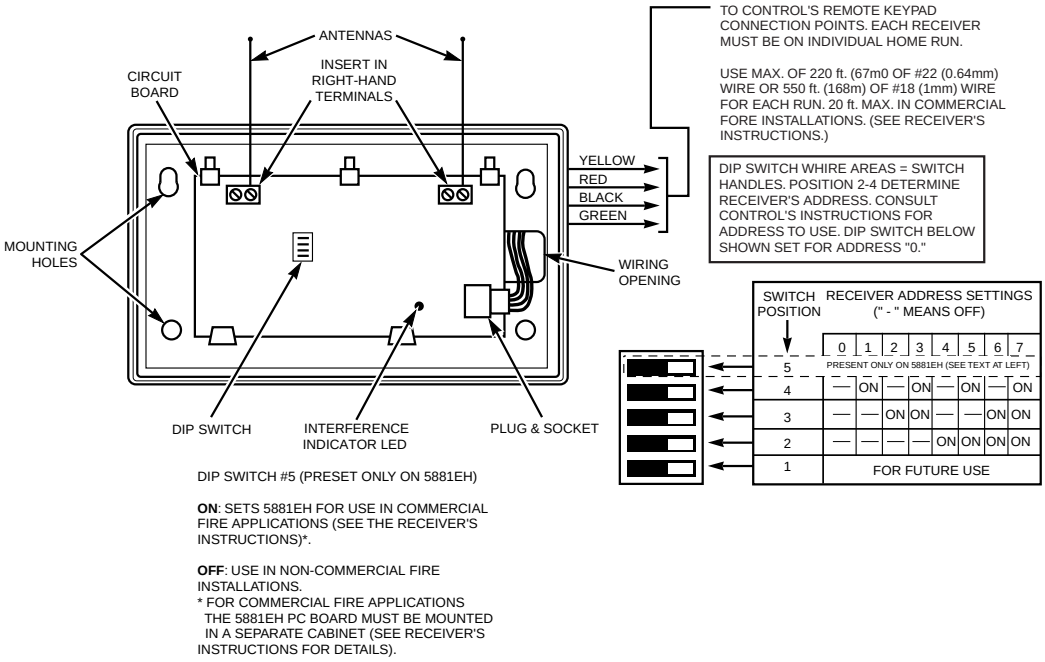

Figure 8-1: 5881 RF Receiver (cover removed)

3. Refer to the Installation Instructions provided with the receiver for further installation procedures regarding antenna mounting, etc.
4. Set the receiver's DIP switches for an address (01-07) which is not being used by another device (i.e., keypads, relay modules, etc.).

Take note of the address you select for the RF receiver, as this address must be enabled in the system's Device Programming in the #93 Menu Mode Programming section of the Programming Guide).

Installing the 5800TM Module

Installation of this module is necessary only if you are using one or more 5827BD Wireless Bi-directional keypads.

The 5800TM must be located next to the 5881 Receiver (between one and two feet from the receiver's antennas). The 5800TM must not be installed within the control cabinet. Mount the unit using its accompanying mounting bracket.

5800TM Wiring Connections

Connect the 5800TM to the control panel's keypad connection terminals, using the supplied connector with flying leads, as follows:

WIRE	TERMINAL ON CONTROL
RED (+12VDC)	Terminal 11
BLACK (Ground)	Terminal 12
GREEN (Data to Control)	Terminal 13
YELLOW (Data from Control)	Terminal 14
BLUE: Not Used	

Cut the red jumper for Address Setting 28; cut the white jumper for Address 29; cut both jumpers for Address 30.

This address must be enabled in the control's Device Programming as a keypad and then assigned to a partition, (see #93 Menu Mode Programming section of the Programming Guide).

For additional information, refer to the 5800TM's instructions.

House ID Sniffer Mode

This mode applies only if you are using a wireless keypad (5827/5827BD).

Use the House ID Sniffer Mode to make sure you do not choose a House ID that is in use in a nearby system. To enter this mode, proceed as follows:

1. Enter **[Installer Code] + [#] + [2].**
2. The receiver will now "sniff" out any House IDs in the area and display them. Keep the receiver in this mode for at least 2 hours to give a good indication of the House IDs being used. Use a House ID that is **not displayed**.
3. To exit the Sniffer Mode, simply enter your **[Installer Code] + OFF.**
4. If you need to re-program the House ID of the receiver, do so before proceeding.

The Sniffer Mode disables RF point reception, it cannot be entered while any partition is armed.

5800 Series Transmitter Setup

5800 Series transmitters have built-in serial numbers that must be enrolled by the system using the *# 93 Menu Mode Programming* (refer to the *Programming Guide*), or input to the control via the downloader. 5800 Series transmitters (except 5827, described separately) do not have DIP switches.

Each transmitter's zone number is programmed into the system in # 93 Menu Mode. Some transmitters, such as the 5816 and 5817, can support more than one "zone" (referred to as loops or inputs). On the 5816, for example, the wire connection terminal block is Loop 1, the reed contact is loop 2. Each loop must be assigned a different zone number.

For button-type transmitters (wireless keys), such as the 5804, 5804BD, 5803, and 5801, you must assign a unique zone number to each individual button used on the transmitter. Each button on the transmitter also has a pre-designated loop or input number, which is automatically displayed when enrolled.

Transmitter Supervision

Except for some transmitters that may be carried off premises (5802, 5802CP, 5803, 5804, 5804BD, 5827, and 5827BD), each transmitter is supervised by a check-in signal that is sent to the receiver at 70–90 minute intervals. If at least one check-in is not received from each supervised transmitter within a programmed period (field 1∗31), the "missing" transmitter number(s) and "CHECK" or "TRBL" will be displayed.

The supervision for a particular transmitter that may be carried off the premises (5801, 5802MN) may be turned off by enrolling it as a "UR" (unsupervised RF) type, as described later in this manual.

Some 5800 Series transmitters have built-in tamper protection and will annunciate a "CHECK" or "TRBL" condition if covers are removed.

Transmitter Input Types

All of the transmitters described have one or more unique factory-assigned input (loop) codes. Each of the inputs requires its own programming zone (e.g., a 5804's four-button inputs require four programming zones).

Transmitters can be programmed as one of the following types:

Type	Description
RF **(Supervised RF)**	Sends periodic Check-in signals, as well as Fault, Restore, and Low Battery signals. The transmitter must remain within the receiver's range.
UR **(Unsupervised RF)**	Sends all the signals that the RF type does, but the control does not supervise the Check-in signals. The transmitter may therefore be carried off-premises.
BR **(Unsupervised Button RF)**	These only send Fault signals. They only send Low Battery signals when they are activated (button pressed). The transmitter may be carried off-premises.

Transmitter Battery Life

- Batteries in the wireless transmitters may last from 4 to 7 years, depending on the environment, usage, and the specific wireless device being used. Factors such as humidity, high or low temperatures, as well as large swings in temperature may all reduce the actual battery life in a given installation.
- The wireless system can identify a true low battery situation, thus allowing the dealer or user of the system time to arrange a change of battery and maintain protection for that given point within the system.
- Some transmitters (e.g., 5802, 5802CP, and 5803) contain long-life but nonreplaceable batteries. At the end of their life, the complete unit must be replaced (and a new serial number enrolled by the control).
- Button-type transmitters, (e.g., 5801, 5802, 5802CP & 5803), should be periodically tested by the installer for battery life.

Do not install batteries in wireless transmitters until ready to enroll. After enrolling, batteries need not be removed.

Compatible 5800 Series Transmitters

Model	Product	Input Type	Description
5801	Wireless Panic Transmitter	UR or RF	• Has four pushbuttons, each with a unique input (loop) code. • For arming/disarming, the button must be assigned to a user code when "adding a user."
5802 5802CP	Pendant (Personal Emergency Transmitter) Belt Clip (Personal Emergency Transmitter)	BR Only	• Has single pushbutton. • Contains a nonreplaceable battery. At the end of the battery's life, the entire unit must be replaced. • For arming/disarming, the button must be assigned to a user code when "adding a user."
5802MN	Miniature (Personal Emergency Transmitter)	UR or RF	• Has single pushbutton • If using for arming/disarming, the button must be assigned to a user code when "adding a user." • Contains a replaceable battery.
5804	Wireless Key Transmitter	BR Only	• Has four pushbuttons, each with a unique input (loop) code. • Contains a replaceable battery. • If using for arming/disarming, the button must be assigned to a user code when "adding a user."
5806/5807 5808	Wireless Photoelectric Smoke Detectors	RF	• One-piece smoke detectors with built-in transmitter. • 5806 and 5807 UL Listed for residential fire usage only. 5808 UL Listed for commercial fire.
5816	Door/Window Transmitter	RF	• Has two unique input (loop) codes: one for a wired closed circuit contact loop; the other for a built-in reed switch (used in conjunction with a magnet).
5817	Multi-Point Universal Transmitter	RF	• Has three unique input (loop) codes: one for a "Primary" contact loop with programmable options; the others for two "Auxiliary" closed circuit contact loops.
5818	Recessed Transmitter	RF	• Reed switch magnetic contact sensor that is easily concealed in the frame and edge of a door or window. • Has a single unique input (loop) code.

Compatible 5800 Series Transmitters (continued)

Model	Product	Input Type	Description
5804BD	Bi-directional Wireless Key Transmitter	BR Only	• Has four pushbuttons, each with a unique input (loop) code. • Contains replaceable batteries. • Can indicate system status via its 2 LEDs and sounder. • House ID must be set. • Requires 5800TM Transmitter Module for status indications. • If using for arming/disarming, the button must be assigned to a user code when “adding a user.”
5827	Wireless Keypad	House ID	• Can be used to turn the burglary protection on and off. • Features the same built-in panic functions as wired keypads. • The keypad is identified as zone “000" on wired keypads when it transmits with a low battery.
5827BD	Wireless Bi-directional Keypad	House ID	• Operates the system similarly to wired keypads • Can indicate system status via its 3 LEDs and sounder. • Includes 3 panic keys. • House ID must be set. • Requires 5800TM Transmitter Module
5849	Glassbreak Detector	RF	• Requires both sound and shock of breaking glass to cause alarm to be transmitted. • Has unique input code.
5890	PIR Detector	RF	• Dual-element passive infrared detector/transmitter with built-in selectable pulse count. • Has unique input code. • ***Note*:** There is a 3-minute lock-out between fault transmissions to conserve battery life.

Checkout Procedure for Wireless Zones

Use the Transmitter Sniffer Mode to test that transmitters have all been properly programmed.

1. Enter **[Installer Code]** + **[#] + [3]**. Keypad(s) will display all zone numbers of wireless units programmed for that partition.
2. Fault each wireless zone, causing each device to transmit. As the system receives a signal from each of the transmitters, the zone number of that transmitter will **disappear** from the display.

A transmitter not "enrolled" will not turn off its zone number.

3. To exit the Transmitter Sniffer Mode, enter **[Installer Code] + [1].**

Be sure to perform the Transmitter Sniffer Mode Test for every partition that has wireless transmitters programmed.

Go/No Go Test Mode

Before mounting transmitters permanently, conduct Go/No Go Tests to verify adequate signal strength and reorient or relocate transmitters if necessary.

Make sure that all partitions are disarmed when performing this test. Since the wireless receiver gain is reduced, checking in this mode assists in determining good mounting locations for the transmitters, and verifies that the RF transmission has sufficient signal amplitude margin for the installed system.

1. Enter **[Installer Code] + [5].**

Note: For multi-partition systems, make sure all partitions are disarmed before entering this mode.

2. Once transmitters are placed in their desired locations and the approximate length of wire to be run to sensors is connected to the transmitter's screw terminals, fault each transmitter.

Note: Do not conduct this test with your hand wrapped around the transmitter, as this will cause inaccurate results.

- If a single receiver is used, the keypad will beep three times to indicate signal reception. If two receivers are used, the keypad will beep once if the first receiver received the signal, twice if the second receiver received the signal, and three times if both receivers heard the signal (which is desirable for redundant configurations).
- If the keypad does not beep, reorient or move the transmitter to another location. Usually a few inches in either direction is all that is required.

3. Mount the transmitter according to the instructions provided with the transmitter.
4. Exit the mode by entering **[Installer Code] + [1]**.

Output Devices

In This Section

- *General Information*
- *Installing the 4204 and 4204CF Relay Modules*
- *Installing the FSA Modules*
- *Programming Output Devices*

General Information

The VISTA-128FB supports up to 96 outputs to activate and de-activate as desired. Each device must be programmed as to how to act (ACTION), when to activate (START), and when to deactivate (STOP). Each of these is described later in this section. This is provided by 4204, 4204CF, FSA-8, FSA-24 and 4101SN modules.

They can be used to:

- Turn lights on and off
- Control sounders
- Control doors
- Give status indications.

4204/4204CF Relay Modules

Each 4204 module provides 4 relays with Form C (normally open and normally closed) contacts. Each 4204CF module adds two additional style Y supervised bell outputs to the system. If 4204CF modules are used exclusively, only relays 1 and 3 on each module can be programmed. The other 2 relays (relays 2 and 4) on each module are used for supervision purposes.

FSA Modules

The 8-Zone LED Fire System Annunciator FSA-8 and 24-Zone LED Fire System Annunciator FSA-24 provide the ability for a fire response unit to identify quickly and easily the point/zone of a fire. These indicators may be used for other functions as well, such as status indication. A maximum of 4 FSA modules, in any combination, can be supported. Each FSA module can support up to 24 LEDs dependent upon model selection.

This section is used to program relays to activate in response to a programmed **condition.** The system can also be programmed to activate relays at specific **times** by using the *#80 Scheduling Menu Mode–Time Driven Events* function.

4101SN Relay Modules

The 4101SN V-Plex Single Output Relay Module is a serial number polling loop output device. The 4101SN features the following:

- Form C relay contacts rated at 2A, 28VAC/VDC with contact supervision.

The position of the relay is supervised, but not the actual external contact wiring.

- One class B/style B EOLR-supervised auxiliary input zone.
- Operating power and communication with control panels via the V-Plex polling loop.
- Electronics mounted in a small plastic case with tamper-protected cover.

Installing the 4204 and 4204CF Relay Modules

The relay module will not operate until the device address you have set the DIP switches for is enabled in the control's *Device Programming* in the *#93 Menu Mode*.

To wire the relay modules, perform the following steps:

Step	Action
1	Set the 4204 or 4204CF's DIP switches for a device address between 01-15. See *Figures 9-1 and 9-2.* **Make sure the address is not being used by another device (keypads, RF receivers, etc.).**
2	Mount the 4204 and 4204CF Modules as per the instructions provided with the modules.
3	Connect the module's wire harness to the keypad terminals (6, 7, 8, and 9). Plug the connector at the other end of the harness into the module. **If mounted remotely homerun each module to the control. The table below shows the maximum wire run lengths from the control to each 4204. Refer to the instructions provided with the 4204CF for its maximum permissible wire lengths.**

Wire Gauge	Maximum Length
#22	125 feet
#20	200 feet
#18	300 feet
#16	500 feet

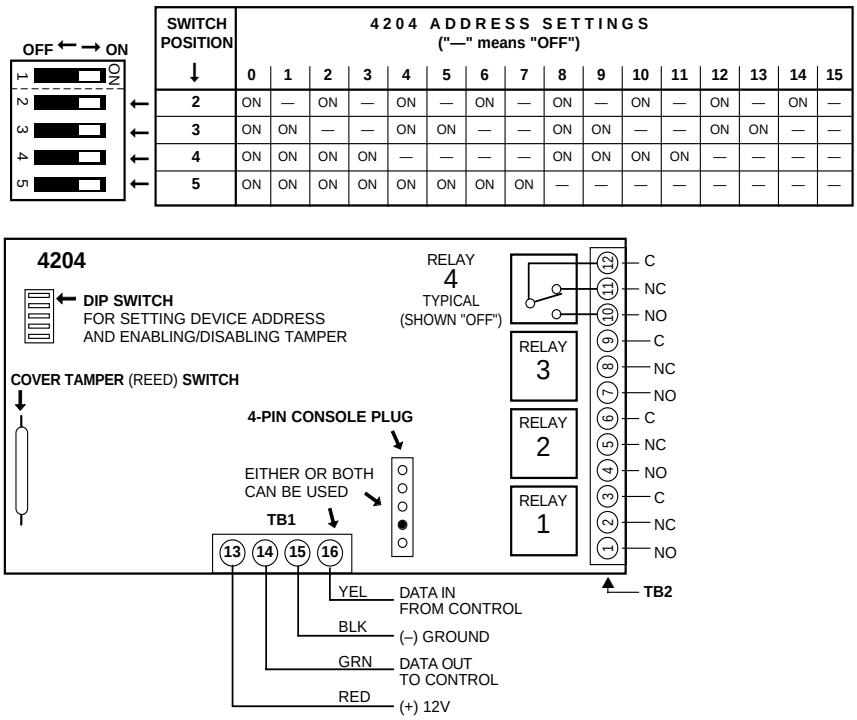

SWITCH POSITION ↓	4204 ADDRESS SETTINGS ("—" means "OFF")															
	0	1	2	3	4	5	6	7	8	9	10	11	12	13	14	15
2	ON	—	ON	—	ON	—	ON	—	ON	—	ON	—	ON	—	ON	—
3	ON	ON	—	—	ON	ON	—	—	ON	ON	—	—	ON	ON	—	—
4	ON	ON	ON	ON	—	—	—	—	ON	ON	ON	ON	—	—	—	—
5	ON	ON	ON	ON	ON	ON	ON	ON	—	—	—	—	—	—	—	—

Figure 9-1: 4204 Relay Module

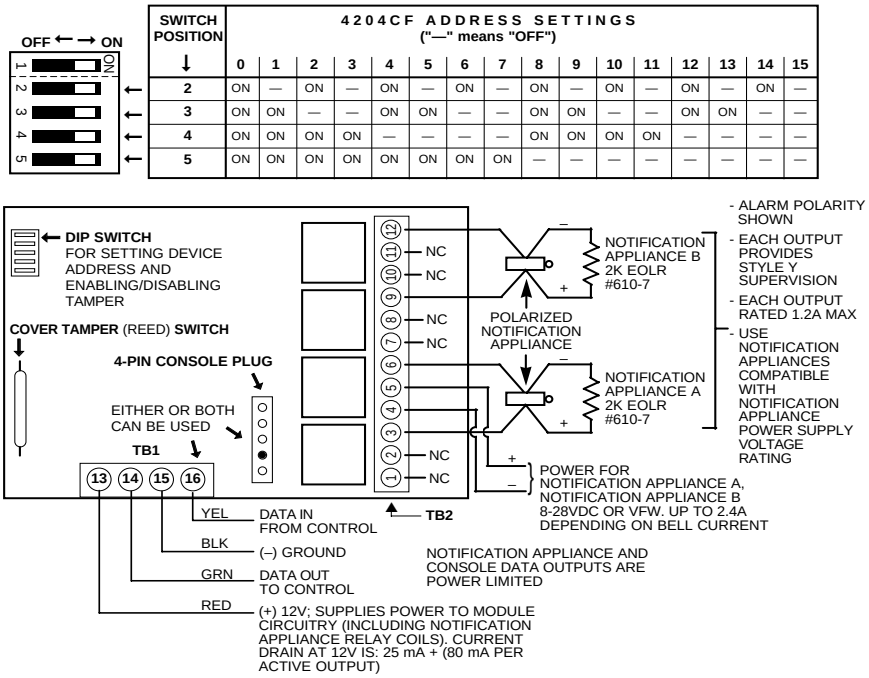

SWITCH POSITION ↓	4204CF ADDRESS SETTINGS ("—" means "OFF")															
	0	1	2	3	4	5	6	7	8	9	10	11	12	13	14	15
2	ON	—	ON	—	ON	—	ON	—	ON	—	ON	—	ON	—	ON	—
3	ON	ON	—	—	ON	ON	—	—	ON	ON	—	—	ON	ON	—	—
4	ON	ON	ON	ON	—	—	—	—	ON	ON	ON	ON	—	—	—	—
5	ON	ON	ON	ON	ON	ON	ON	ON	—	—	—	—	—	—	—	—

Figure 9-2: 4204CF Relay Module

Installing the FSA Modules

The module will not operate until the device address you have set the DIP switches for is enabled in the control's *Device Programming* in the *#93 Menu Mode*.

To install the FSA module, perform the following steps:

Step	Action
1	Set the FSA module's DIP switches for a device address between 08-23. See the module's instructions for the DIP switch table. **Make sure the address is not being used by another device (keypads, RF receivers, etc.).**
2	Mount the FSA module horizontally to a duplex box (quad box for FSA-24).
3	Connect the module to the control's keypad terminals (6, 7, 8, and 9).

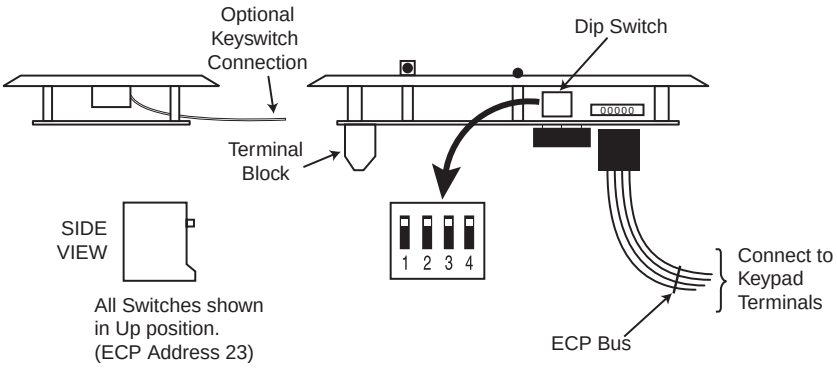

Figure 9-3: Wiring the FSA Module

Programming Output Devices

Each output must be programmed to begin one of four types of ACTIONS at a designated START event, and end that ACTION at a designated STOP event.

The letter(s) in parentheses after each function described below, such as (A) after ACTION, are those that appear in the various summary displays of programmed data during programming.

ACTION (A)

The "ACTION" of the device is how the device will respond when it is activated by the "START" programming. You may want the device to activate momentarily, to pulse on and off continuously, or to remain activated until some other event occurs to stop it.

There are five different choices of actions:

- ACTIVATE for 2 SECONDS and then reset.
- ACTIVATE and REMAIN ACTIVATED until stopped by some other event.
- PULSE ON and OFF until stopped by some other event.
- NO RESPONSE when the device is not used.
- TOGGLE on and off alternately with each activation of event.

START (STT)

The "START" programming determines when and under what conditions the device will be activated. The following START options are available:

1) **EVENT (EV)** is the condition (alarm, fault, trouble, restore) that must occur to a zone or group of zones (zone list) in order to activate the device. These conditions apply ***only*** when a zone list or zone number is used.

   ZONE LIST (ZL) is a group of zones to which the "EVENT" applies in order to activate a particular device. Note that there are a total of 15 zone lists that can be programmed; when the selected EVENT (alarm, fault or trouble) occurs in **any** zone in the selected "Start" ZONE LIST (01-15), activation of the selected device will START.

2) **ZONE #** A specific zone going into alarm, fault, trouble, or restore (Event programming) can be used to start the relay action. Enter the 3-digit zone number (000-128).

3) **ZONE TYPE/SYSTEM OPERATION (ZT).** If all zones to be used to start the device have the same response type, and there are no other zones of this type which are **not** to activate this device, then "ZONE TYPE" may be used instead of using a "ZONE LIST" and "EVENT" to activate the device.

   If a System Operation, such as "DISARMING" or "ANY FIRE ALARM" is to activate the device, the appropriate choice would also be entered under the "ZONE TYPE" option.

   The "ZONE TYPE/SYSTEM OPERATION" option functions independently of the "EVENT/ZONE LIST" combination.

   If a specific "ZONE TYPE" is chosen, any zone of that response type going into alarm, trouble, or fault will cause the device to activate as selected in "ACTION." If the same "ZONE TYPE" is also chosen for the STOP programming, any zone of that type that *restores* will de-activate the device.

   If a "SYSTEM OPERATION" is chosen, that operation will cause the device to activate as selected in "ACTION." The different choices for "ZONE TYPE" and "SYSTEM OPERATION" are listed in "Programming Relays" later in this section, and on the Programming Form.

4) **PARTITION No. (P).** The device's "Start" ZONE TYPE/SYSTEM OPERATION may be limited to an occurrence on one partition (1-8), or any partition (0).

STOP (STP)

The "STOP" programming determines when and under what conditions the device will be de-activated. The following options are available:

1). **RESTORE ZONE LIST (ZL)**. If a "ZONE LIST" is used as the "Stop" event, the device will de-activate when **all** the zones in that list restore from a previous fault, trouble, or alarm condition. This will occur regardless of what is programmed to "START" the device; therefore, a "RESTORE ZONE LIST" would normally only be used when a "ZONE LIST" is used to start the device.

2). **ZONE TYPE/SYSTEM OPERATION (ZT).** Instead of using a "RESTORE ZONE LIST," a specific zone (response) type or system operation action can be selected to de-activate the device.

   If a specific "ZONE TYPE" is chosen, any zone of that response type that restores from a previous alarm, trouble, or fault condition will cause the device to de-activate.

   If a "SYSTEM OPERATION" is chosen, that operation will cause the device to de-activate. The different choices for "ZONE TYPE" and "SYSTEM OPERATION" are listed in "Programming Relays" in the Programming Form.

3) **PARTITION No. (P).** The device's "Stop" Zone Type/System Operation may be limited to an occurrence on one partition (1-8), or on any partition (0).

The "ZONE TYPE/SYSTEM OPERATION" option functions independently of the "EVENT/ZONE LIST" combination.

See the Programming Guide for a detailed explanation and the display prompts for programming output devices.

4285/4286 VIP Module

In This Section

- *General Information*
- *Mounting the VIP Module*
- *Wiring the VIP Module*

UL The 4285/4286 VIP Module is not permissible for commercial fire or UL commercial burglary installations.

General Information

The 4285/4286 VIP Module is an add-on accessory that permits the user to access the security system (and relays) via a touch-tone telephone, either from the premises or by calling the premises from a remote location. Only one VIP Module can be used in a security system. This module must be enabled as Device Address 4 in *Device Programming* in the *#93 Menu Mode Programming* section of the *Programming Guide*, and must be assigned to a partition.

The 4285/4286 VIP Module offers the following features:

- Allows the user to receive synthesized voice messages over the phone regarding the status of the security system.
- Allows the user to arm and disarm the security system and perform most other commands using the telephone keypad.
- Allows the user to control relays using the telephone keypad.
- Provides voice annunciation over the phone to confirm any command that is entered.
- Announces many of the same words that would normally be displayed on an alpha keypad under the same system conditions. Refer to the words in bold on the Alpha Vocabulary list found in the *#93 Menu Mode Programming* section of the *Programming Guide*.
- Can be supervised for connection to control panel (annunciated and reported as zone 804).

Detailed operating instructions for phone access to the security system are provided with the VIP Module. In addition, a Phone Access User's Guide is supplied with the VIP Module for the user of the system.

Mounting the VIP Module

The VIP Module may be mounted in the control cabinet if space is available or, if this is not possible, on the side of the cabinet or adjacent to it. Pry off the VIP Module's cover prior to wiring.

1. When the VIP Module is mounted inside the control cabinet, attach it to the cabinet's interior surface with 2-faced adhesive tape. You may leave the module's cover off if it is mounted within the cabinet.

Do not mount the VIP Module on the cabinet door or attempt to attach it to the PC board.

1. When the module is to be mounted outside the cabinet, use the screw holes at the rear to mount horizontally or vertically (2-faced adhesive tape may be used, if preferred). You can bring wires out from the side or back (a round breakout is also available on the back). When you complete the module's mounting and wiring, you should install the module's cover (with label affixed, as indicated next).
2. Affix the 4285/4286 connections label (supplied separately) to the inside of the VIP Module's cover if the cover is used. Otherwise, affix the label to the inside of the *control cabinet's* door.

Wiring the VIP Module

The 4285/4286 is wired between the control panel and the premises' handset(s) (see *Figure 10-1)*. It listens for touch tones on the phone line and reports them to the control panel. During on-premises phone access, it powers the premises' phones; during off-premises phone access, it seizes the line from the premises' phones and any answering machines.

1. Make 12V (+) and (–) and data-in and data- out connections from the VIP Module to the control, using the connector cable supplied with the VIP Module. These are the same connections as for remote keypads.
2. Insert the keyed connector at the other end into the mating header on the VIP Module.
3. Connect terminals 1 through 7 on the VIP Module as shown.

Terminal Block Connections

4285/4286 Terminal	**Connects to:**
1. Phone In (Tip)	green wire of direct connect cord
2. Phone In (Ring)	red wire of direct connect cord
3. Phone Out (Tip)	brown wire of direct connect cord
4. Phone Out (Ring)	gray wire of direct connect cord
5. No Connection	
6. Audio Out 1*	Speaker
7. Audio Out 1*	Speaker

*Supported by the 4286 only

Use an RJ31X Jack with the phone cable supplied with the control. Use an additional RJ31X jack and a Direct Connect cord to make connections to the 4285/4286.

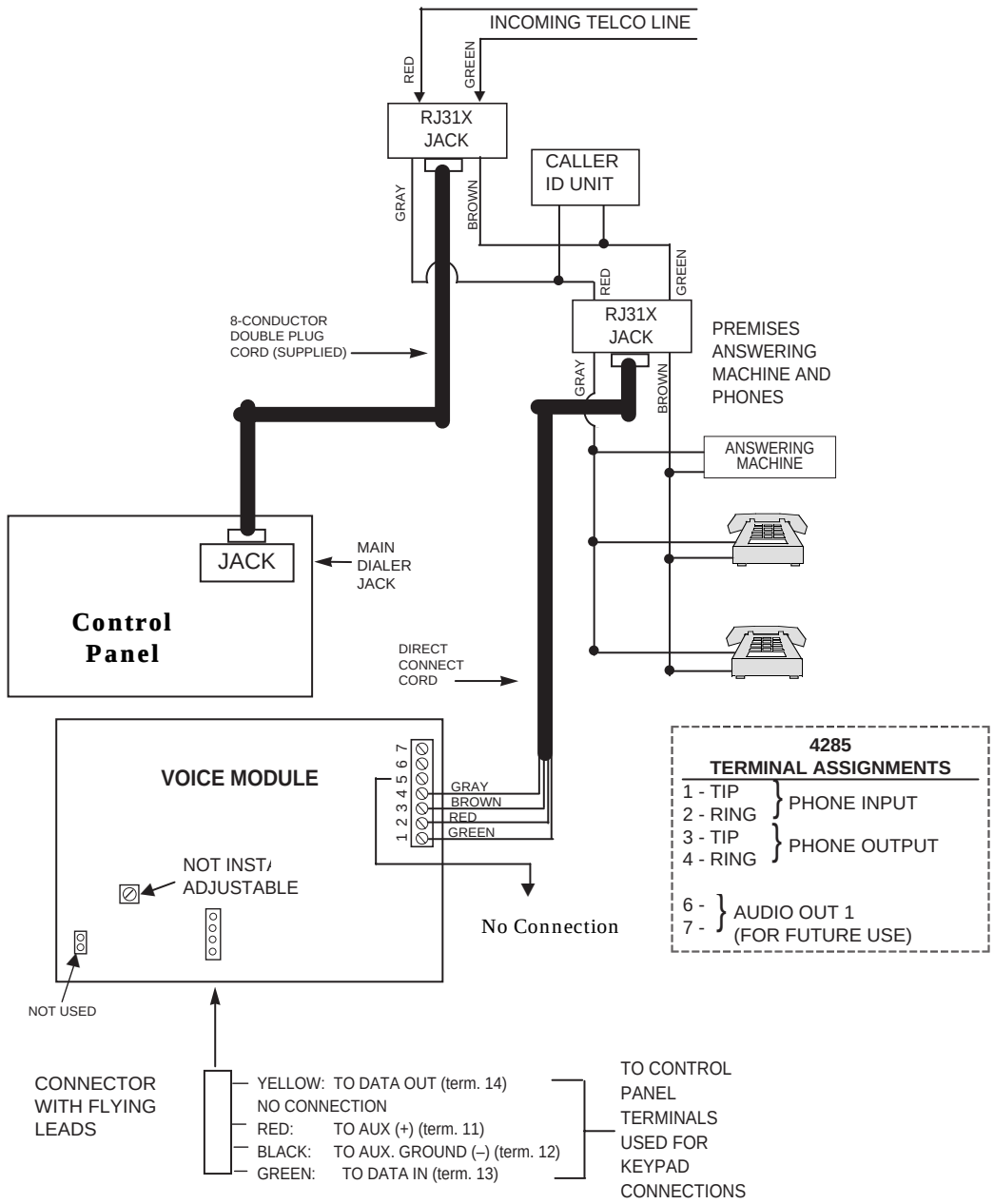

Figure 10-1: 4285/4286 VIP Module Connections

1. Make all connections exactly as shown in Figure 10-1. This is essential, even if the system is not connected to a central station. The 4285/4286 will not function if this is not done. If the leads on the cable are too short to reach their assigned terminals, splice additional wires to them, as required.
2. If Touch-tones are not present following phone access to the security system via an on-premises phone, try reversing the wires connected to terminals 3 and 4 on the 4285/4286.

If the phone plug is disconnected from the control, the premise's phones will not operate.

Audio Alarm Verification (AAV) Unit

In This Section

- General Information
- AAV Module Operation
- Audio Alarm Verification Module Connections
- Programming Audio Alarm Verification Module Options

UL The Audio Alarm Verification (AAV) feature is not UL Listed.

General Information

An Audio Alarm Verification (AAV) Module (also known as two-way voice), such as the Eagle 1241, is an add-on accessory that permits voice dialog between an operator at a central station and a person at the alarm installation, for the purpose of alarm verification. This feature is supported only if Alarm reports are programmed to be sent to the primary phone number.

Make connections from Eagle 1241 Module terminals 7 and 8 to the control's zone 5 terminals 22 and 23. The purpose of this connection is to silence and restore the sounders at the premises. It is also used to postpone noncritical dialer reports while the AAV session is in progress. Note that zone 5 is then no longer available as a protection zone. When using the AAV, zone 5 must be assigned a zone response type (e.g., response type 10), and option 1*60 must be enabled to silence sounders on the premises.

AAV Module Operation

After all messages have been sent during a reporting session to the primary phone number, the control will trigger the AAV if at least one of the messages was an Alarm report. If Contact ID format is selected for the primary phone number, and a Cancel report code is enabled, the control will send a Listen-in to Follow" message (Event Code 606), which signals the 685 (rev. 4.6 or higher) to hold the phone connection for 1 minute.

Once triggering occurs, the control will give up the phone line to the AAV Module, without breaking connection with the central station. During the time the AAV is active, all sirens and all continuous keypad sounds in all partitions will be shut off. When the AAV indicates that the audio alarm verification session is completed, all keypad sounds will be restored. Sirens will be restored if the alarm timeout period has not expired.

As part of its fail-safe software, the control will limit all audio alarm verification sessions to 15 minutes. This is because once the session begins, the AAV Module controls the duration. If a new fire alarm should occur during a session, the control will break the phone connection and send the new Fire Alarm report, then re-trigger the AAV Mode. All other dialer messages triggered during ongoing conversation will be held until either the AAV Module signals that it is inactive, or the 15-minute timeout occurs.

The AAV Module is triggered via the use of a 4204 Relay as shown in *Figure 11-1*. The start and stop conditions for that relay must be set to choice 60, "Audio Alarm Verification" during *Output Programming* in the *#93 Menu Mode Programming* section of the *Programming Guide*.

Some AAV modules allow remote triggering by ring detection at the alarm installation. If this option is selected, it may defeat modem download and 4285/4286 VIP Module remote access capability. The DIP switch settings shown in *Figure 11-1* disable remote AAV Module trigger option. The control also requires that the AAV Module trigger type is falling edge, which is set in DIP switch settings shown.

1. 685 Receiver software must be rev. 4.6 or higher. Earlier versions will not hold the phone line connection.
2. Contact ID code for "Listen-in-to-follow" is 606. Contact ID is the only reporting format that will send a "listen-in-to-follow."

Audio Alarm Verification Module Connections

Connect the Audio Alarm Verification Module's falling edge trigger input (terminal 5 on Eagle Model 1241) to a 4204 Relay Module, as shown in *Figure 11-1*.

If also using a 4285/4286 VIP Module, be sure to follow the corresponding diagram when making connections.

Programming Audio Alarm Verification Module Options

1. With at least one 2-line alpha keypad (6139/6139R) wired and set to a proper address, temporarily apply power to the system.
2. Enter Data Field Programming Mode: [Installer Code] + **8 0 0 0.**
3. Program the following data fields:

   ***45** PRIMARY DIALER FORMAT: Set for 1 (Contact ID).

   1*60 ZONE 5/AUDIO ALARM VERIFICATION: Set for 1.

If you need more information about actual programming procedures, see The Mechanics of Programming section.

4. Zone 5 must be programmed for response type 10 and **the EOLR must be removed, regardless of whether or not EOLR resistors have been enabled in field *41.** Zone 5 is no longer available as a protection zone.
5. Program a 4204 Relay to trip on Zone Type/Sys. Op. 60 Audio Alarm Verification (see *Output Programming* in the *#93 Menu Mode Programming* section of the *Programming Guide.)*.
6. Press *99 to exit Program Mode.

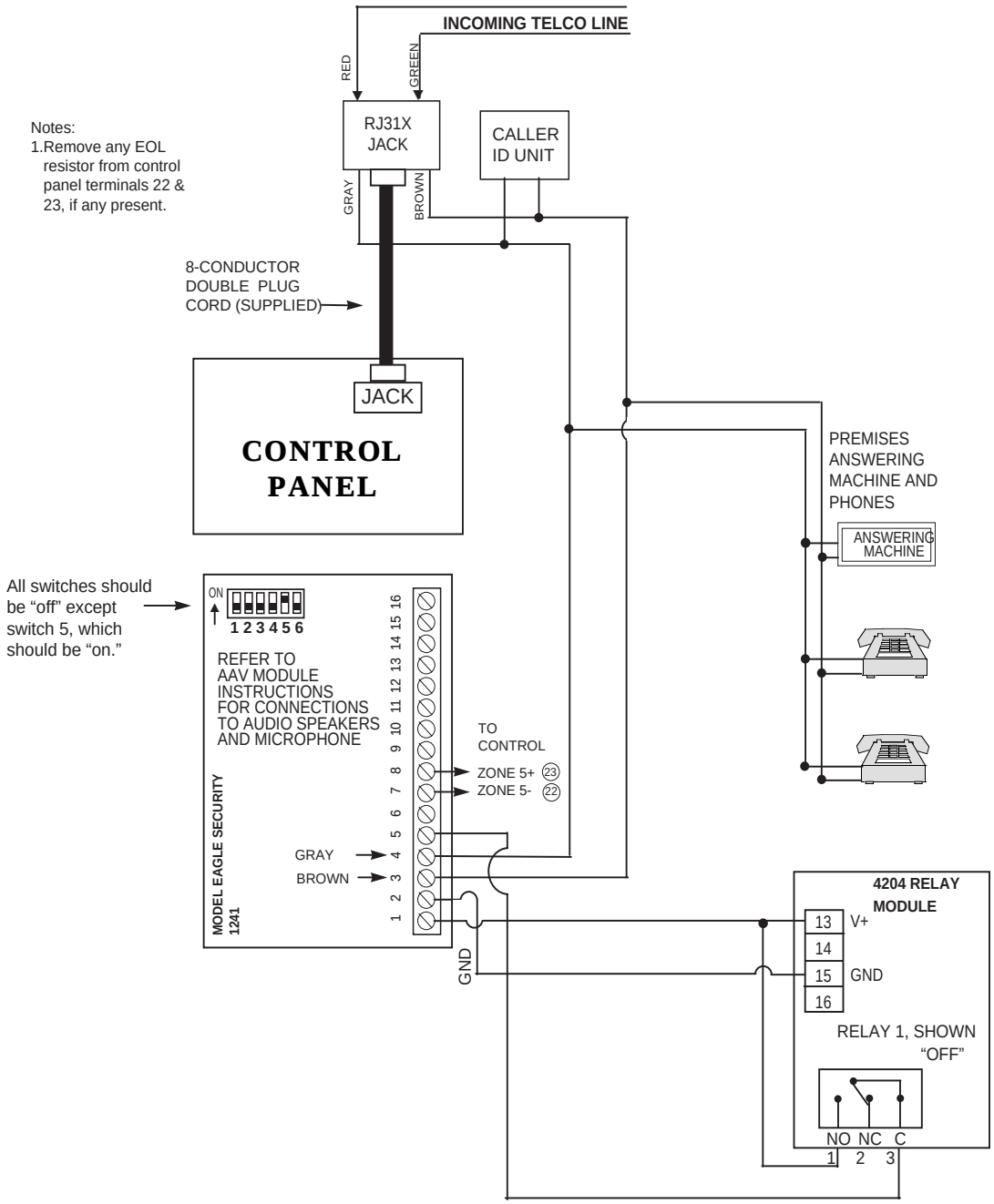

Figure 11-1: Audio Alarm Verification Module Connections

If the phone plug is disconnected at the control, the premise's phones will not operate. If a problem exists, remove the phone plug at the RJ31X to resume premises phone operation.

J2 Trigger Outputs

In This Section

- *General Information*
- *Remote Keypad Sounder Operation and Wiring*
- *Remote Keyswitch Operation and Wiring*
- *5140LED Indicator Module*
- *Auxiliary Alarm Signaling Equipment*
- *Event Log Printer Connections*
- *Direct Wire Downloading*

General Information

The J2 connector, located in the upper right-hand corner of the main PCB, provides 1 input (labeled INPUT 1) and seven trigger outputs (labeled OUT 1 - OUT 7) that can be used to interface to the following:

- Remote keypad sounder
- UL Listed keyswitch
- 5140LED Indicator Module
- Auxiliary alarm signaling equipment such as an ADEMCO Long Range Subscriber Radio
- Event logging serial printer (via the 4100SM Interface Module)
- PC computer used to direct-wire download the panel's programming information (via the 4100SM Interface Module)

The trigger output ratings are listed below. Note that all outputs are power-limited.

Outputs 1, 5, 7:	LOW:	2K to ground
	HIGH:	10-14 VDC @ 20 mA max
Remaining Outputs:	LOW:	1K to ground
	HIGH:	10-14 VDC through 5K

The pin assignments for the J2 connector are shown in *Figure 12-1*. Use a 4142TR 9-wire trigger cable (1 supplied) to interface with this connector. The panel does not supervise field wiring connected to this connector.

Program fields 3*19 and 3*20 are used to select the functions of INPUT 1 and OUT 1-7 as indicated in *Figure 12-1*.

When using J2 for LORRA, Input 1 (Pin 9) is supervised by Zone 973, which is used for supervision of the LORRA XMIT OKAY signal. Assign a 24-hr. zone response type (5 or 19) to this zone.

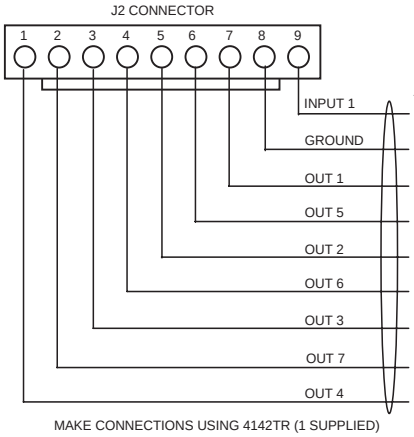

FIELD 3*19 = 0 FIELD 3*20 = 0 (DEFAULT)	FIELD 3*19 = 0 FIELD 3*20 = 1	FIELD 3*19 = 0 FIELD 3*20 = 2	FIELD 3*19 = 1
LORRA XMIT OKAY	LORRA XMIT OKAY	LORRA XMIT OKAY	PRINTER DTR
OPEN/CLOSE	KEYSWITCH ARMED LED	5140LED AC FAIL LED	AS SELECTED IN FIELD 3*20
REMOTE CONSOLE SOUNDER	KEYSWITCH READY LED	5140LED DIALER 2 FAIL LED	AS SELECTED IN FIELD 3*20
FIRE ALARM	FIRE ALARM	FIRE ALARM	PRINTER RXD
FIRE SUPERVISORY	FIRE SUPERVISORY	FIRE SUPERVISORY	AS SELECTED IN FIELD 3*20
BURGLARY ALARM	BURGLARY ALARM	5140LED COMM FAIL LED	AS SELECTED IN FIELD 3*20
TROUBLE	TROUBLE	TROUBLE	AS SELECTED IN FIELD 3*20
PANIC ALARM	PANIC ALARM	5140LED DIALER 1 FAIL LED	AS SELECTED IN FIELD 3*20

Figure 12-1: J2 Pin Assignments and Functions

Remote Keypad Sounder Operation and Wiring

An optional Amseco PAL 328N Piezo Sounder can be used to duplicate the sounds produced by the keypad's built-in sounder. The panel will remote all sounds (i.e., alarm, trouble, chime, entry/exit, etc.) produced by the keypad's built-in sounder except for the short beeps associated with keypad key depression. One application of this feature might be to produce chime sounds at a distant location from the panel's keypads. If used, program field 3*20 must be set to "0" (factory default) to enable the remote sounder option, and field *15 must be set to the desired partition number. The PAL 328N must be connected to J2/OUT 5 as shown in *Figure 12-2.*

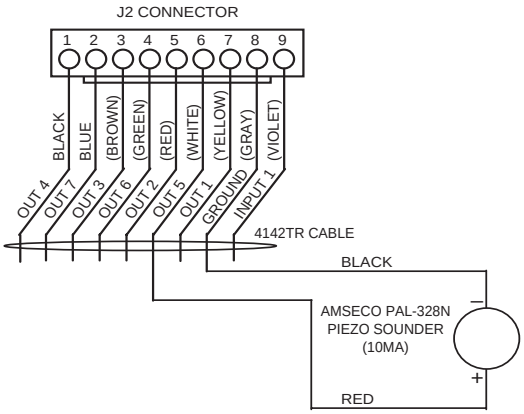

Figure 12-2: Remote Keypad Sounder Wiring

Remote Keyswitch Operation and Wiring

An optional UL Listed remote keyswitch, such as the ADEMCO 4146, can be used for remote arming/disarming of the burglary portion of the system and for remotely silencing alarms. If used, the following must be programmed:

1. Field *15 to assign the keyswitch to a partition (1-8), or 9 to silence fire bell if fire alarm occurs; enter 0 to disable.
2. Zone 7 must be assigned a non-zero response type.

3. Field 3*20 must be set to "1" if you are using J2/OUT 1 and 5 to operate keyswitch ARMED and READY LEDs (if keyswitch provides LEDs).
4. *40 to enable Open/Close report for keyswitch.

Wire the keyswitch as shown in *Figure 12-3*. The tamper switch need not be used for fire or UL Household Burglary installations. For UL Commercial Burglary installations, the tamper switch must be wired to zone 8, and zone 8 must be programmed for Day Trouble/Night Alarm (zone type 5). When the keyswitch is removed from the wall, the tamper switch will open, causing an alarm or trouble on zone 8, and causing the control to disable keyswitch operation until the associated partition is disarmed from a keypad.

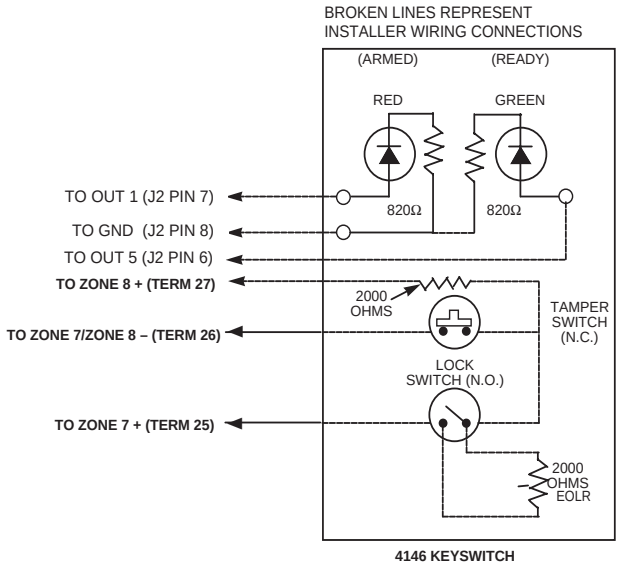

Figure 12-3: Remote Keyswitch Wiring

Keyswitch Operation

The VISTA-128FB allows 2 modes of keyswitch operation. When field *15 is set to a partition (1-8), the keyswitch operates as follows:

With System Disarmed and No Alarms Present:

A momentary short across zone 7 will arm the partition in the AWAY mode, and a short held for more than 10 seconds will arm the partition in the STAY mode. A subsequent short will disarm the partition. The keyswitch LEDs will indicate that the partition has armed (see table below).

Faulted zones must either be corrected or bypassed before the system will arm.

UL

In commercial fire installations, mount the keyswitch next to a keypad. The keypad will display the UL-required "FIRE BELL SILENCED" indication when the keyswitch is used to silence a fire alarm.

With Alarms Present:

A momentary short across Zone 7 will silence alarm bell and keypad sounds, and will disarm the partition if it was armed. The keyswitch LEDs provide a memory of alarm indication (see table below). A subsequent short across Zone 7 will clear the alarm memory indication and reset 2-wire smoke and glassbreak detectors (if used).

When field *15 is set to "9," the keyswitch operates as follows:

A momentary short across Zone 7 will silence alarm bell sounds (i.e., turn off Bell 1, Bell 2 and the aux relay if programmed for alarms) only if a fire alarm is present. Outputs will re-sound automatically if a new fire alarm condition is detected. Burglary alarms will not trigger the bell output until a User Code + OFF is entered at the keypad. A momentary short has no effect if there are no fire alarms present. This mode is used when you want to provide the fire department with keyswitch silence capability without compromising the burglary system's security.

LED indications are defined as follows:

GREEN	RED	MEANING
OFF	OFF	DISARMED & NOT READY
ON	OFF	DISARMED & READY
OFF	ON STEADY	ARMED AWAY
OFF	SLOW FLASH	ARMED STAY
OFF	RAPID FLASH	ALARM MEMORY

Open/Close reporting for the keyswitch is enabled in field *40, and the keyswitch reports as User 0.

5140LED Indicator Module

An optional 5140LED Indicator Module can be used in municipalities, which require dedicated indicators for communicator fault status. The 5140LED provides the following indicators:

1. AC POWER:
   - ON if AC power is present.
   - OFF if AC power is not present.
2. COMM FAILURE:
   - ON if maximum number of attempts were made (field 3*21) to transmit a message to the central station. Enter [User Code] + OFF following a successful transmission to turn off.
   - OFF if normal.
3. DIALER 1 FAULT:
   - ON if the main dialer line is faulted. Correct problem and then enter [User Code] + OFF to turn off.
   - OFF if normal.
4. DIALER 2 FAULT:
   - ON if the backup dialer line is faulted. Correct problem and then enter [User Code] + OFF to turn off.
   - OFF if normal.

If used, program field 3*20 must be set to "2," and the 5140LED Module must be connected to J2/OUT 1, 3, 4, 5 as shown in the diagram below. It is designed to be mounted into a standard single-gang electrical box and installed as follows:

1. Pull wires from the panel's J2 connector through an opening in the single-gang box and splice these wires to the module's flying leads. Solderless splices may be used.
2. Mount the module's PC board onto one side of the PC board retainer bracket (supplied).
3. Slide the PC board retainer bracket into the box and fasten with screws (supplied).
4. Mount the stainless steel decorative cover (supplied) onto the box.

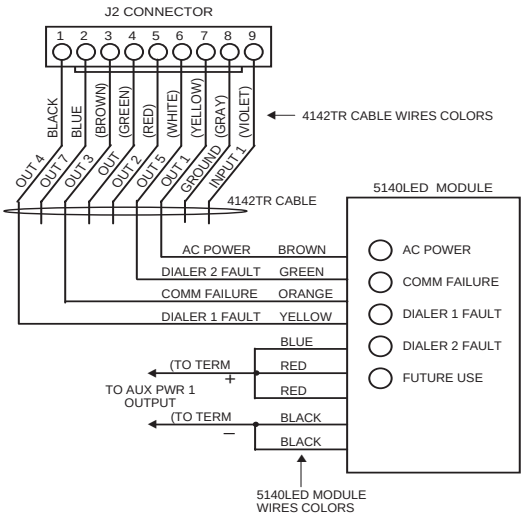

Figure 12-4: 5140LED Indicator Module

Auxiliary Alarm Signaling Equipment

The J2 connector can be used to provide triggers for the following conditions:

- Fire alarm
- Burglary/audible panic alarm
- Silent panic/duress alarm
- Fire supervisory
- Trouble
- Opening/closing (arming/disarming)

These triggers may be used to trip auxiliary alarm signaling equipment such as ADEMCO's 7720, 7720ULF, and 7920SE Long Range Radios. Note that not all of these triggers are available for all settings of field 3*20. See *Figure 12-1 J2 Pin Assignments and Functions* shown earlier for configuration of the J2 triggers.

The triggers are common to all partitions and must be enabled for each partition (data field 2*20). The open/close trigger is LOW when all enabled partitions are armed, and HIGH when any enabled partition is disarmed. The remaining triggers are normally LOW and go HIGH when the corresponding condition occurs in at least one enabled partition. The fire and burglary/audible panic alarm triggers remain HIGH until a [User Code] + OFF is entered in all enabled partition(s) which display these conditions. The silent panic/duress trigger works the same way, except that it is momentary when initiated by duress. The fire supervisory and trouble triggers remain HIGH until the faults are corrected and the [User Code] + OFF is entered in all enabled partition(s) which display these conditions.

Figures 12-5, *12-6*, and *12-7* show how to make connections to the 7720, 7720ULF, and 7920SE Long Range Radios.

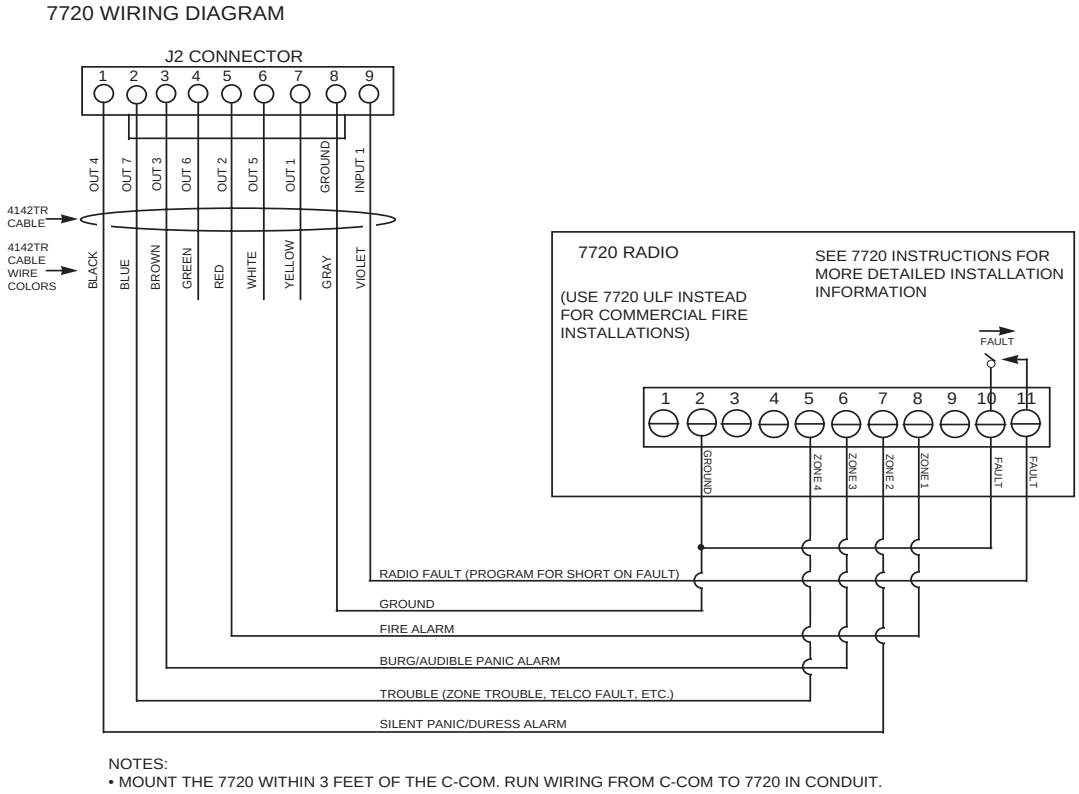

NOTES:
• MOUNT THE 7720 WITHIN 3 FEET OF THE C-COM. RUN WIRING FROM C-COM TO 7720 IN CONDUIT.

Figure 12-5: Connections to 7720 Long Range Radio

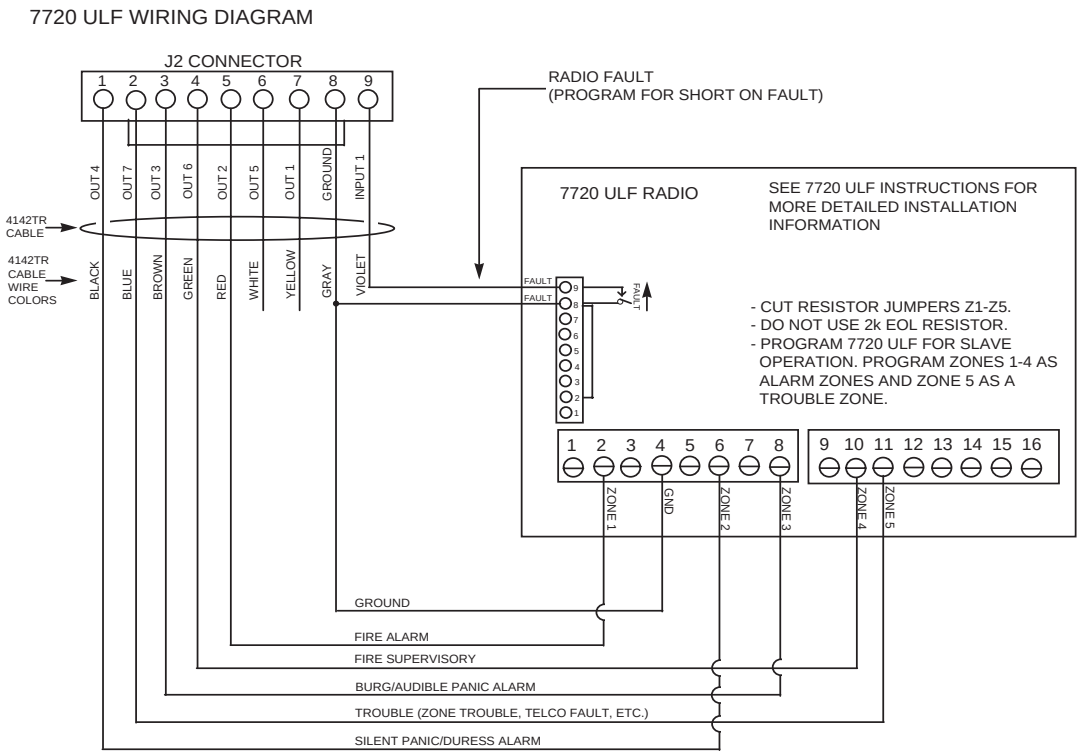

NOTES:
• MOUNT THE 7720 WITHIN 3 FEET OF THE C-COM. RUN WIRING FROM C-COM TO 7720ULF IN CONDUIT.

Figure 12-6: Connections to 7720ULF Long Range Radio

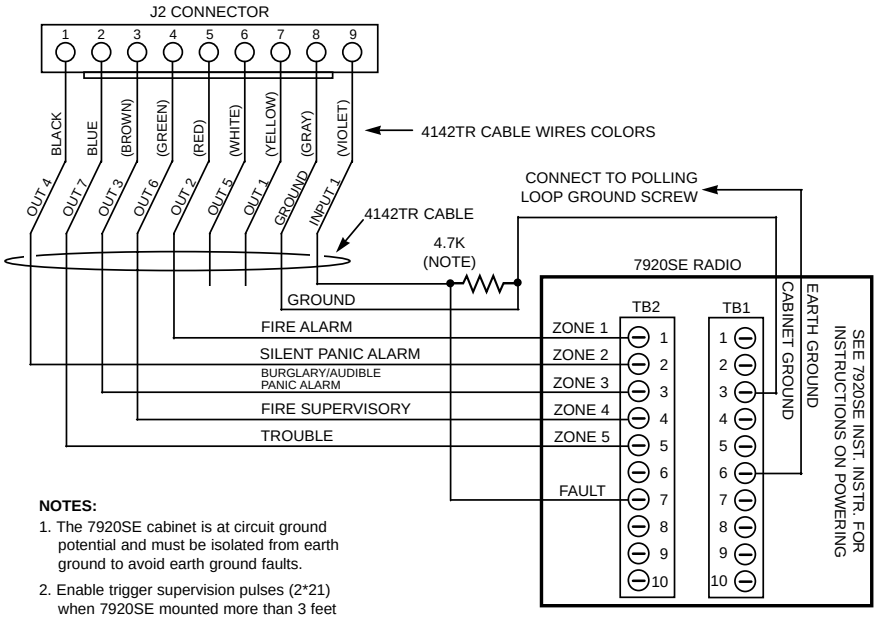

NOTES:

1. The 7920SE cabinet is at circuit ground potential and must be isolated from earth ground to avoid earth ground faults.
2. Enable trigger supervision pulses (2*21) when 7920SE mounted more than 3 feet from control. Run wires from control to 7920SE in conduit and use PVC conduit or equivalent means to isolate cabinets of each unit.

Figure 12-7: Connections to 7920SE Long Range Radio

Event Log Printer Connections

The VISTA-128FB's event log can be printed on a local serial printer. If used, program field 3*19 must be set to "1."

This setting overrides the functions selected for INPUT 1 and OUT 2 made in field 3*20.

Connect a UL EDP Listed serial printer to the J2 connector using an ADEMCO 4100SM Interface module. Refer to the *Event Log Options* section for wiring connections, printer configuration, and a description of the keypad commands, which initiate event log printing.

If earth ground fault sensing is enabled:

1. You may get an earth ground fault indication when the 4100SM Module is clipped directly onto a side-wall of the VISTA-128FB cabinet. If this occurs, use an insulator to insulate the 4100SM's clip-on bracket from the VISTA-128FB cabinet side-wall. Later production versions of the 4100SM have the clip-on bracket isolated from the circuit ground (Terminal 7) and will not have this problem.
2. You may also get an earth ground fault indication if you use a printer (or PC) which has a 3-prong, grounded power cord. If this occurs, first verify that Pin 1 (chassis ground) is isolated from Pin 7 (signal ground) on the 4100SM's RS232 connector. Early production versions of the 4100SM have an unmarked, 3/8' long, bare wire jumper lying near the Pin 1 side of the RS232 connector, which must be cut to isolate these pins. Then verify that these pins are isolated on your printer's RS232 connector. Follow the instructions provided with your printer to isolate these pins, if required.

Direct Wire Downloading

The VISTA-128FB can be downloaded without using a modem or telephone line, but by using a 4100SM Serial Module and Compass Downloading Software. This method of downloading is referred to as DIRECT WIRE downloading. Connect a PC, which runs the downloading software to the 4100SM Module as specified in the module's instructions. Connect the 4100SM to the panel's J2 header. Refer to the *Downloading Primer* section for wiring connections.

Direct-wire downloading can be initiated by following the procedures described in the Compass manual.

Long Range Radio(ECP)

In This Section

- *General Information*
- *Wiring the Long Range Radio to the Control*
- *Programming the Control for the Long Range Radio*
- *Trouble Messages*

General Information

The control can support an ECP Long Range Radio (LRR) (7820, 7835C, and 7845C are supported). These connect to keypad terminals. All messages programmed to be sent via the phone lines may also be enabled to be sent via the LRR. These messages will be transmitted in Contact ID format regardless of the format programmed for the control in fields 45 and 47.

It is recommended that, if possible you use Contact ID format for the main dialer. If Contact ID is not used, certain types of reports, such as “Listen To Follow” (606) will not be sent at all.

Supervision of the LRR

The data lines between the control and the LRR can be supervised, as well as certain functions in the radio. If communication is lost or a trouble condition occurs, both the LRR and the control’s dialer to the central station can be programmed to send a Trouble message.

Note: For complete information, see the Installation Instructions that accompany the radio.

Operation of the LRR

The LRR reporting options are defined by selecting categories of events for each subscriber ID in fields 58 and 59. The reporting categories are Alarms, Troubles, Bypasses, Openings/Closing, System Events, and Test. In addition, within an enabled category, the specific event must be enabled for dialer reporting. If, for instance, zone 10 is enabled to report, but zone 11 is not, zone 10 will report via the LRR, but zone 11 will not.

The priority of events from most to least important, transmitted from the VISTA-128FB to the LRR is: Fire Alarms, Panic Alarms, Burglary Alarms, Fire Troubles, Non-Fire Troubles, Bypasses, Openings/Closings, Test messages, and all other types of reports. The priority here is based on the assumption that multiple events occur at approximately the same time. There isn’t an event priority of messages transmitted via the radio to the central station. Messages are transmitted on a “First In/First out” basis.

There are two subscriber ID’s programmed into the LRR: primary and secondary. These correspond to the two subscriber ID’s programmed into the control for each partition. If a subscriber ID for a partition is not programmed (disabling reports to that central station phone number for that partition), the events enabled for the corresponding subscriber ID in the LRR will not be transmitted.

If the event is to be reported to both phone numbers, dual reporting, then reporting through the LRR, will be done in an alternating sequence. The first event in the queue will be transmitted to the primary radio central station. Then this event will be transmitted to the secondary radio central station. If the event was reported successfully via the control's dialer, it will be deleted from the radio's transmission queue. The control will then proceed to the next event in the queue.

If split reporting is selected for the VISTA-128FB, then the LRR will follow that option. The radio will send the appropriate reports to the primary and secondary central stations.

Wiring the Long Range Radio to the Control

Connect the data in/out terminals and voltage input terminals of the radio to the control's keypad connection points, terminals 11, 12, 13, and 14, as shown below.

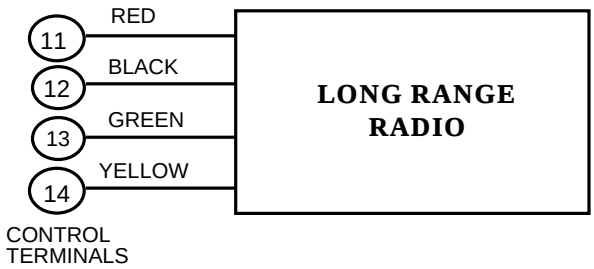

Figure 13-1. Long Range Radio to Keypad Terminals

Programming the Control for the Long Range Radio

The control's subscriber ID's can be passed to the LRR and incorporated into the transmitted data; or the LRR can transmit the subscriber ID programmed in its own EEPROM (see *Device Programming* in the *#93 Menu Mode Programming* section of the *Programming Guide*).

An option exists to send the reports only via the LRR and bypass the control's dialer completely (field 56).

There is an option to stop transmissions via the LRR if communication via the control's dialer to the central station was successful (field 57).

The LRR reporting options are defined by selecting categories of events for each subscriber ID. Field 58 is for selecting the events for the primary subscriber's ID; field 59 is for selecting the events for the secondary subscriber's ID. The reporting categories are: Alarms, Troubles, Bypasses, Openings/Closings, System Events, and Tests.

The control can be programmed to transmit these reports by partition.

Trouble Messages

The following messages will be displayed on the 6139 (alpha keypad) when a problem exists in the Long Range Radio:

1. "LRR Battery": The battery connected to the radio is low.
2. "PLL out of Lock": The radio has an internal fault and cannot transmit any messages.
3. "Early Power Detect": RF power is detected without a valid transmission.
4. "Power Unattained": Full RF power was never attained.
5. "Frwd. Power Loss": RF power was not sustained throughout the transmission.
6. "Antenna Fault": A problem with the antenna has been detected.
7. "LRR CRC is bad": The radio's EEPROM is corrupt (the internal CRC is bad.

Items 2 and 3 require factory service.

Items 4 and 5 could be the result of a bad or low battery.

Item 6 check the antenna connection and cable, otherwise, this requires factory service.

Note: All these messages will be displayed in conjunction with the "CHECK 8xx" message which indicates a trouble on the address to which the LRR unit is programmed in the control.

All of the above events except Antenna Fault will be sent to the event log and reported to the central station using Contact ID Event Code 333 (expansion device trouble). Antenna Fault will use Event Code 357. If the tamper is tripped on the LRR, it will use Event Code 341 (expansion device tamper).

Access Control

In This Section

- *General Information*
- *Access Control Using VistaKey*
- *Access Control Using the PassPoint Access Control System*
- *Access Control of an Entry/Exit Point*
- *Access Control Dialer Events*
- *Wiring the Vista Gateway Module*
- *Programming the Vista Gateway Module*

UL Interfacing the VISTA-128FB with the PassPoint Access Control System via the Vista Gateway Module is not permissible for UL commercial burglary installations.

General Information

The VISTA-128FB is capable of utilizing access control operation via one of two methods:

- Interfacing with a VistaKey module
- Interacting with the ADEMCO PassPoint Access Control System (PassPoint ACS) via VISTA Gateway Module.

The VISTA-128FB processes fire, burglary, arm, disarm and other information. The VistaKey module and PassPoint ACS process card reader information and control the locking and unlocking of doors.

Access Control Using VistaKey

The VistaKey is a single-door access control module that, when connected to the VISTA-128FB, provides access control to the protected premises. The alarm system can support up to 8 VistaKey modules (8 access points).

Do **not** use the VistaKey on an alarm panel that is connected to a PassPoint Access Control System via a VISTA Gateway Module.

For detailed instructions on how to install and program the VistaKey, refer the *VistaKey-SK Installation and Setup Guide*.

UL

The VistaKey module contains three zones. These zones should ONLY be used for access control functions in UL installations. THESE INPUT ZONES ARE NOT TO BE USED FOR FIRE AND BURGLARY APPLICATIONS IN UL INSTALLATIONS.

VistaKey Features

VistaKey features are as follows:

- Each VistaKey communicates with the VISTA-128FB via a special global polling protocol of the V-Plex polling loop.
- In the event local power to the VistaKey is lost, the VistaKey module provides back-up monitoring of the Access Point door via a built-in V-Plex device that is powered solely from the polling loop. It is programmed as a new type of V-Plex device as part of the control's V-Plex Device Programming. A serial number label is affixed to the VistaKey module for manual entry of its serial number.
- The VistaKey supports up to 250 cardholders.
- All configurable options for each VistaKey are accomplished via software, firmware, and non-volatile memory, eliminating the need for PC board jumpers.
- Access Point zone numbers (1-15) are assigned via a user-friendly, 16-position rotary switch.
- The addition and removal of VistaKey modules from the system is easily accomplished via the VISTA-128FB keypad.
- Each VistaKey provides one open-collector output trigger (sink 12mA @ 12VDC).

Mounting and Wiring the VistaKey

To mount and wire the VistaKey module, perform the following steps:

Step	Action
1	Mount the VistaKey, Door Strike or Mag Lock, and Card Reader.
2	If applicable, mount the Door Status Monitor (DSM) and/or Request to Exit (RTE) devices.
3	Using *Figure 14-1* at the end of this section as a reference, connect the Card Reader interface cable to TB3, *making the +5v or +12v connection last*.
4	Connect the leads to TB1 in the following order: a. All ground leads to terminals 2, 5 and 9). b. The (optional) DSM, RTE, and General Purpose leads to terminals 6, 7, and 8, respectively. c. Door Strike (or Mag Lock) lead to terminal 10. d. Local +12v or +24v supply lead to terminal 1. e. Local +12v or +24v supply lead to the N/C relay terminal 11 (if a Mag Lock is being used), **OR** to the N/O relay terminal 10 (if a door strike is being used).
5	Connect the – polling loop and + polling loop leads (from the VISTA-128FB) to terminals 4 and 3 respectively.
6	Set the Address Select switch to the desired access door number (1-15).
7	Repeat steps 1 through 6 for each VistaKey being installed.

THIS DEVICE COMPLIES WITH PART 15 CLASS A LIMITS OF FCC RULES. OPERATION IS SUBJECT TO THE FOLLOWING TWO CONDITIONS:
(1) IT MAY NOT CAUSE HARMFUL INTERFERENCE.
(2) IT MUST ACCEPT ANY INTERFERENCE THAT MAY CAUSE UNDESIRED OPERATION.

THIS EQUIPMENT SHOULD BE INSTALLED IN ACCORDANCE WITH THE NATIONAL FIRE PROTECTION ASSOCIATION'S STANDARDS 70 & 74 (NATIONAL FIRE PROTECTION ASSOC., BATTERYMARCH PARK, QUINCY, MA. 02269). PRINTED INFORMATION DESCRIBING PROPER MAINTENANCE, EVACUATION PLANNING AND REPAIR SERVICE IS TO BE PROVIDED WITH THIS EQUIPMENT.

FOR ADDITIONAL RATINGS AND SPECIFICATIONS, REFER TO INSTALLATION INSTRUCTION FOR THE VISTAKEY-SK.

WEEKLY TESTING IS REQUIRED TO ENSURE PROPER OPERATION OF THIS SYSTEM.

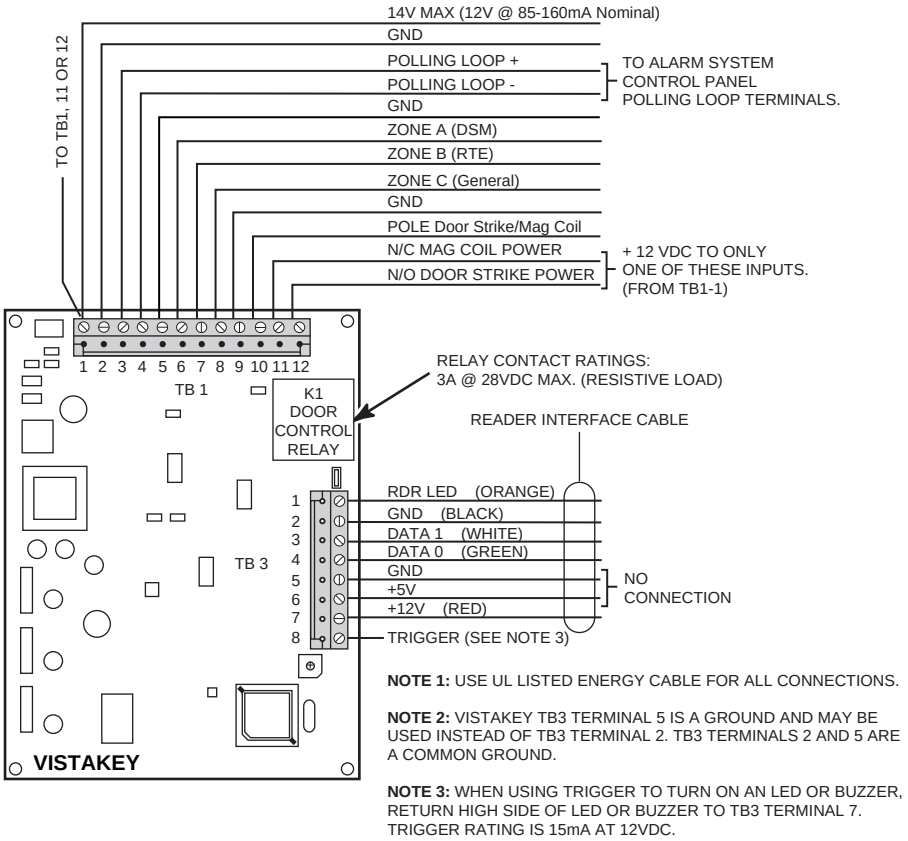

NOTE 1: USE UL LISTED ENERGY CABLE FOR ALL CONNECTIONS.

NOTE 2: VISTAKEY TB3 TERMINAL 5 IS A GROUND AND MAY BE USED INSTEAD OF TB3 TERMINAL 2. TB3 TERMINALS 2 AND 5 ARE A COMMON GROUND.

NOTE 3: WHEN USING TRIGGER TO TURN ON AN LED OR BUZZER, RETURN HIGH SIDE OF LED OR BUZZER TO TB3 TERMINAL 7. TRIGGER RATING IS 15mA AT 12VDC.

Figure 14-1: Wiring the VistaKey

Connecting the Card Reader

Lead from Reader	Lead Color	To VistaKey TB3 Terminal #
Green LED	Orange	1
Ground*	Black	2
DATA 1 (Clock)	White	3
DATA 0 (Data)	Green	4
+5VDC†	Red†	6
+12VDC†	Red†	7

* TB-3 Terminal 5 is also a ground and may be used instead of terminal 2. Terminals 2 and 5 are a common ground.

† Connect to +5VDC OR +12VDC per reader manufacturer's specification.

Programming for the VistaKey

The VISTA-128FB contains additional programming options in the *#93 Menu Mode* for the VistaKey. See the *VistaKey-SK Installation and Setup Guide* for the detailed programming instructions. These options include:

Zone Programming Input Types

- **06 = Serial Number Polling Loop** – (Select for Door Status Monitor Backup DSMB). In the event local power to the VistaKey is lost, the status of the DSM can no longer be reported to the control panel via the normal microprocessor circuits of the VistaKey. In this case a V-Plex SIM, which is located on the VistaKey board and powered directly from the polling loop, is activated and reports the state of the DSM via the standard V-Plex polling system.

  NOTE: To obtain the DSMB function, the Input Type must be defined as 06 and the next prompt (Access Point) must contain the Access Point # (01-15) (address of the VistaKey module).

- **11 = VistaKey Door Status Monitor (DSM)** – This input type is used to define the zone that will monitor when the door (access point) is open. It is used by the system to be able to determine if the door is opened after a card swipe or if the door is being held in an open position. The device is normally a magnetic switch mounted on the door where the status of the switch will be different while the door (access point) is in an open condition.
- **12 = VistaKey Request to Exit (RTE)** – Use this input type to map an uncommitted RTE zone to an alarm panel zone and is not normally used if the zone is used for a request to exit function. Use this input type to unlock the door lock so that you may leave though the access point. The device may be something as simple as a momentary contact switch up to a motion detector or keypad.
- **13 = VistaKey General Purpose (GP)** – This input type operates in the same manner as other VISTA-128FB alarm panel zones and is provided so that a zone in the proximity of the VistaKey can be wired without having to run additional wiring from the VISTA–128B control panel.

Access Point Programming

This is part of the #93 Menu Mode. It is used to define the parameters for each of the VistaKey zones including which group(s) has access through an access point (door).

Access Group Programming

This is part of the #93 Menu Mode. It is used to define the capabilities (privileges) for each group of users.

Event/Action Programming

This is part of the #93 Menu Mode. It is used to define events and time windows for a group. This area specifies when a group may be provided entry and/or exit authorization and the action to be taken on entry or exit. This action covers functions such as system arming, system disarming, output activation, and etc.

Note:

- Output Device Control may be accomplished via the **[User Code] + [#] + [77]** mode.
- Access Control Test may be accomplished via the **[User Code] + [#] + [78] + [Grant Command]**
- Card enrollment may be accomplished via the **[User Code] + [#] + [79]** mode.

Access Dialer Enables

When the VistaKey is installed with an alarm system, the system defaults are set so that the system does not send reports to the central station or record them in the event log. The programming is accomplished in field 1∗35 for the following events:

- ACS Troubles - To enable or disable ACS trouble reporting.
- ACS Bypasses - To enable or disable ACS bypass reporting.
- ACS System - To enable or disable ACS system reporting. (i.e., ACS module reset)
- ACS Alarms - To enable or disable ACS alarm reporting.
- Dialer (Enable to send reports to the central station and record them in the event log for the ACS Group Events. Disable to record events in the event log only).

Access Control Using the PassPoint Access Control System

The VISTA-128FB interfaces with the PassPoint ACS via the VISTA Gateway Module (VGM). The VGM is connected between the ECP bus (keypad terminals) of the control and the network bus of the PassPoint ACS (see *Figure 14-2*). The control sends the VGM its status information, event log entries and entry/exit requests, (inputs programmed with response type Access Point), from keypads, hardwired zones, and rf transmitters. The VGM then reformats and retransmits this information to the Main Logic Board, (MLB) on the PassPoint ACS network bus.

The VISTA-128FB is able to control the following on the PassPoint ACS:

- Access Points

The PassPoint ACS is able to control the following on the VISTA-128FB:

- Relays
- Arming/disarming schedules
- Keypad Display

See the documentation that comes with the PassPoint ACS for details.

The PassPoint ACS can dedicate some of its inputs for use as regular VISTA-128FB hardwired zones (the zone response type is ACS). The PassPoint ACS can also utilize the VISTA-128FB's dialer for reports to the central station.

Access Control of an Entry/Exit Point

The control can send entry and exit requests to the PassPoint ACS utilizing keypads, and button type (BR) RF transmitters. A zone is programmed with a response type 27 (Access Point) and an appropriate input type (console, RF).

Using the Alpha Keypad

The following entries at the keypad provide access of a door.

- Code + #73
- Code + #74 + access point

  These entries allow a user to gain access to an access point in the PassPoint system.
- Code + #75 + access point + function

  This entry requires the installation of the VGM and the PassPoint ACS. The selectable functions available are Grant, Protect, Bypass. Selecting 'Grant" will temporarily unlock a door. Selecting "Protect" will cause the door to unlock only when a valid keypad entry is received. Selecting "Bypass" will cause the door to be permanently unlocked to allow continuous access.

Programming the Keypad

Step	Action
1	Enter Zone Programming in the #93 Menu Mode.
2	Program the zone with a response type 27 (Access Point).
3	Enter the access point number (00-31) of the door and indicate whether this is an entry or exit console.
4	Program whether this is an entry or exit point.
5	Enter the partition number.
6	Enter the input type as CS (09).
7	Enter the keypad ECP address.

See Zone Programming in #93 Menu Mode Programming section for a detailed explanation.

Using an RF Transmitter Zone

A button type RF button-type transmitter (5804) can be used to provide access or egress for up to 4 doors. One button will control one door. Also, a button can be used to provide access or egress due to a panic or duress condition.

An RF transmitter (5816) can be used with a remote switch to provide exit in case of a fire alarm using a PassPoint event action.

Programming the RF Transmitter

Step	Action
1	Enter Zone Programming in the #93 Menu Mode.
2	Program the zone with a response type 27 (Access Point).
3	Enter the access point number (00-31) of the door.
4	Indicate whether RF device is for entry or exit.
5	Enter the partition number
6	Enter the input type: button RF (05).
7	Enter the loop number.
8	Enroll the serial number

See Zone Programming in #93 Menu Mode Programming section for a detailed explanation.

- RF buttons and pendants must be assigned to a user number in order to function. See the *User Access Codes* section for the procedure.
- An RF transmitter will not provide access or grant if the system is in any test mode.

Wireless Keypads

Wireless keypads (5827 & 5827BD) can provide another way of entering or exiting the premises. They function the same as alpha keypads, except when the code + # 73 is entered. This entry will allow momentary access to ALL access points in the partition to which the keypad is assigned

Programming the Wireless Keypad

Enter the partition the keypad is assigned to in field 1*48.

Using ACS Zone Inputs

If the PassPoint ACS has uncommitted zones, these may be used by the VISTA-128FB as hardwired zones.

Programming the ACS Zone Inputs

Step	Action
1	Enter Zone Programming in the #93 Menu Mode.
2	Program this zone as any other zone. Indicate the input type as ACS (10).
3	Enter the PassPoint ACS's zone ID (00-31)

See Zone Programming in #93 Menu Mode Programming section for a detailed explanation.

Control of Lighting and Appliances

Lighting and appliances can be controlled when an access or exit event occurs. Lights or appliances can be automatically turned on or off when a valid entry or egress request is presented at an access point. To control these devices, the VISTA-128FB relays or the ACS relays or triggers are used with keypads and/or RF transmitters whose response type is Access Point (27).

Programming the Control of Lighting and Appliances

Step	Action
1	Enter Output Programming in the #93 Menu Mode.
2	Program all the information for the relay.
3	Select the relay type: V-Plex (0) (4101SN), ECP (1) (4204/4204CF).

See Output Programming in #93 Menu Mode Programming section for a detailed explanation.

Using VISTA-128FB Without the VGM and PassPoint ACS

The VISTA-128FB can be used for access control without interfacing to PassPoint ACS. A user can trigger an access point (i.e., door strike) for 2 seconds by entering [User Code] + [0].

Programming the Control for Stand-alone Access Control

Step	Action
1	Enter Output Programming in the #93 Menu Mode.
2	Program the relay type as 0, 1, or 3.
3	For type 1, program the ECP address and relay #.
4	Program the relay number in field 1∗76 (partition-specific).

See Output Programming in #93 Menu Mode Programming section for a detailed explanation.

Access Control Dialer Events

All PassPoint ACS events can be sent to the VISTA-128FB's dialer via the VGM. These events will also be logged into the control's event log. This is enabled in the PassPoint ACS. *See the PassPoint ACS documentation for a detailed explanation.*

Wiring the Vista Gateway Module

The Vista Gateway Module is connected between the ECP bus (VISTA-128FB keypad terminals) and the network bus of the PassPoint Access Control System. See *Figure 14-2* for the proper wiring connections.

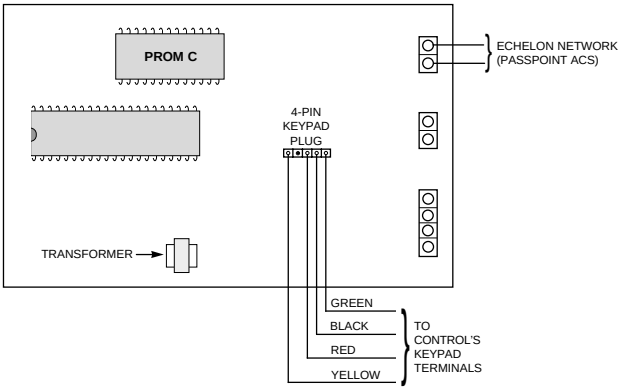

Figure 14-2: Wiring the Vista Gateway Module

Programming the Vista Gateway Module

See the PassPoint ACS instructions to program the Vista Gateway Module.

External Sounders

In This Section

- *General Information*
- *Bell Circuit Supervision*
- *Wiring Bell Outputs*
- *Compatible Alarm-Indicating Devices*
- *Programming the Bell Outputs*

General Information

The VISTA-128FB provides two bell circuit outputs for operating fire and burglary alarm notification appliances. Each bell output is rated as follows: 10VDC - 14VDC, 1.7 amps max., power limited. Note that the total alarm current drawn from the Aux Power 1, Aux Power 2, polling loop, Bell 1, and Bell 2 outputs cannot exceed 2.3 amps for battery-independent operation. Each output has the following options:

- Class B supervision (style-Y) or no supervision
- Selectable to activate by individual zone assignments
- Selectable for Confirmation of Arming Ding (1-2 sec. sounding to confirm system has armed)
- Selectable to chime when entry/exit or perimeter zones are faulted
- Selectable for steady or pulsing output
- Selectable for no timeout or timeout of 2-30 minutes

If you purchased a kit containing the PS24 Power Supply Module, you may use this module to convert one or both VISTA-128FB 12VDC, 1.7A style-Y supervised bell outputs to 24VFW, 1.7A style-Y supervised bell outputs.

UL

1. Burglary bell circuits must be programmed for a timeout of 16 minutes or longer.
2. Commercial fire alarm systems require bell or indicating circuits to be supervised.

Bell Circuit Supervision

To **supervise** bell circuits, do the following:

- Install a 2K EOL resistor (Model 610-7, supplied) across the last notification appliance on each bell output to be supervised.
- Program Zones 970 (Bell 1) and 971 (Bell 2) for 24-Hr. Trouble response (zone type 19) (see *Zone Programming in the #93 Menu Mode Programming* section of the *Programming Guide*).

To **unsupervise** bell circuits, do the following:

- Cut the white jumpers W1 (for Bell 1) and/or W4 (for Bell 2) on the main PCB.
- Program zones 970 (Bell 1) and 971 (Bell 2) for a response type of 00 to disable supervision (see *Zone Programming in the #93 Menu Mode Programming* section of the *Programming Guide*).
- *Do not* install the EOL resistor(s) across the unsupervised output(s).

Wiring Bell Outputs

By default, Bell 1 is set to operate as an unsupervised burglary bell output. You may use any UL Listed, nonpolarized burglary-indicating device rated for 10-14 VDC operation on this output. Note that a local burglary Grade A listing requires that a bell in a tamper-protected housing be used (such as ADEMCO AB12) and that bell wiring be run in conduit.

By default, Bell 2 is set to operate as a supervised fire bell output. Note that the panel supervises this wiring for open, short and earth ground faults. You may use any UL Listed, polarized fire-indicating device rated for 10 -14 VDC operation on this output. Observe polarity when wiring polarized devices.

Compatible Alarm-Indicating Devices

Compatible devices are listed below. The wiring connections follow this chart.

Model	Description
System Sensor PA400B (beige)/PA400R (red)	Indoor piezo sounder (red or beige), rated at 90 dB @ 10 feet.
System Sensor MA-12/24	Horn
System Sensor SS1215 ADA	Strobe
System Sensor SS121575 ADA	Strobe
System Sensor MASS1215 ADA	Horn/Strobe
System Sensor MASS121575 ADA	Horn/Strobe
System Sensor MA/SS-12	Horn/Strobe
Wheelock LS1-12-VFR	Strobe
Wheelock MS1-12-VFR	Strobe
Wheelock MT-12-LS-VFR	Horn/Strobe
Wheelock MT4-12-LS-VFR	Horn/Strobe
Wheelock MT-12-MS-VFR	Horn/Strobe
Wheelock MT4-12-MS-VFR	Horn/Strobe
Gentex GXS-2-15	Strobe
Gentex GXS-2-1575	Strobe
Gentex SHG-12-15	Horn/Strobe
Gentex SHG-12-1575	Horn/Strobe
Faraday 5336L-U-14-12-DC	Horn/Strobe
Faraday 5337L-U-14-12-DC	Horn/Strobe

(Shows wiring for bell outputs configured using factory default programming selections)

BELL 1 FACTORY DEFAULTS
Bell 1 is configured as a burglary bell circuit
- Use nonpolarized Grade A indicating devices (e.g., ADEMCO No. AB12 - see wiring notes below)
- Wiring is not supervised; cut white jumper, W1, on main PCB
- Activates for Zones 3-8 alarms (by default, Zones 3-8 are assigned to burglary partition 1)
- Steady alarm output
- 16-minute timeout

BELL 2 FACTORY DEFAULTS
Bell 2 is configured as a fire bell circuit
- Use polarized indicating devices
- Class B open/short supervision
- 24-hr. trouble response to faults
- Activates for Zone 1-2 alarms (by default, Zones 1-2 are assigned to fire partition 1)
- Pulsed alarm output
- No timeout

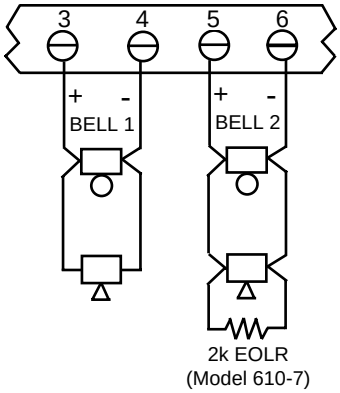

AB12 WIRING NOTES:
- Disconnect the AB12's factory-wired connection from its terminal #4 to its outer box.
- Set field 3*17 to "1" to enable Zone 6 tamper function.
- Assign Zone 6 to a burglary partition. Program it for day trouble/night alarm response (type 05) when this bell is used by only one burglary partition. Program it for 24-hr. audible alarm response (type 07) when this bell is used by more than one burglary partition.
- All wiring from AB12 to panel must be run in conduit.

AB12 BELL/BOX WIRING

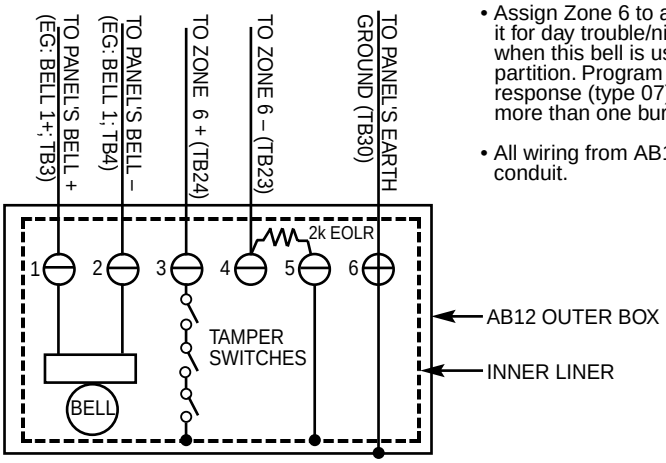

Figure 15-1: External Sounder Connections

Programming the Bell Outputs

1. Enter Data Field Program Mode [Installer Code] + **8 0 0 0.**
2. Program the following data fields:

***08**	Temporal Siren Pulse
***13**	Select Timeout for Bell 1
***16**	Confirmation of Arming Ding for Bell 1
1*47	Enable Chime for Bell 1
3*57	Confirmation of Arming Ding for Bell 2
3*59	Enable Chime for Bell 2
3*15	Select either Steady or Pulsing for each bell circuit output
3*60	Select Timeout for Bell 2

3. Enter Zone Programming in the #93 Menu Mode (refer to the *Programming Guide*) to assign zones to bell outputs and/or aux. relay.
4. Exit Program Mode by pressing ***99**.

The bell outputs will not respond if zones are not assigned to them. For fire alarms, the system will display "FIRE ALARM SILENCED." This message will also be displayed if the bell output is not supervised.

Auxiliary Relay

In This Section

♦ *Relay Functions*

Relay Functions

The VISTA-128FB provides a built-in Form C relay with contacts rated at 28 VAC/VDC, 2.8 amps max. This relay may be programmed for one of the functions below (determined by program field 3*61):

- Alarm Activation
- Trouble/Supervisory Activation
- 4-Wire Smoke Detector Reset
- Battery Saver

These options are described below.

Alarm Activation

(3*61 = 1 or 4): Steady activation in response to an alarm on one, some or all zones, as selected in *Zone Programming* in the *#93 Menu Mode* (refer to the *Programming Guide*). If 3*61 = 1, the auxiliary relay remains active until Aux. Relay Timeout expires or until [User Code] + OFF is entered. This option can be used to provide a third, unsupervised bell output for supplementary strobes, sounders, etc. when wired to the Aux. Power 1 output or to a separate power supply as shown in *Figure 16-1*. If field 3*61 = 4, the auxiliary relay remains activated until [User Code] + [#] + 67 is entered. This option can be used for elevator recall or ventilator shutdown on fire alarms. By default, the relay is set to activate on alarm zones 1-8 with no timeout (field 3*61 = 1). This usage might be required for a common fire and burglary alarm strobe indicator.

When field 3*61=1, the auxiliary relay can also be programmed to give a brief activation for confirmation of arming (field 3*57) or for entry/exit or perimeter zone faults while Chime Mode is active (field 3*59).

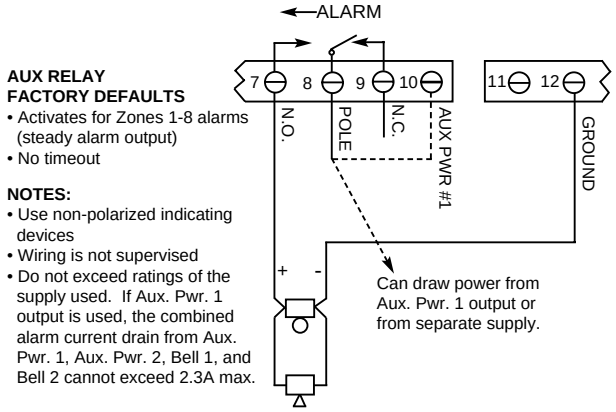

Figure 16-1. Auxiliary Relay Used as Unsupervised Bell Output

Trouble/Supervisory Activation

(3*61 = 0): Steady activation in response to any zone or system-related trouble condition or to any fire supervisory condition. Remains activated until all fault conditions have been corrected and the [User Code] + OFF has been entered.

4-Wire Smoke Detector Reset

(3*61 = 2): Momentary (6 second) activation at second entry of [User Code] + OFF sequence which interrupts power to 4-wire smoke detectors connected to hardwired zones (Zones 1-8) or to polling loop zones, allowing the detectors to be reset following an alarm. Power to 4-wire smoke detectors should be wired to the auxiliary relay and to the Auxiliary Power 1 output as shown in *Figure 16-2*.

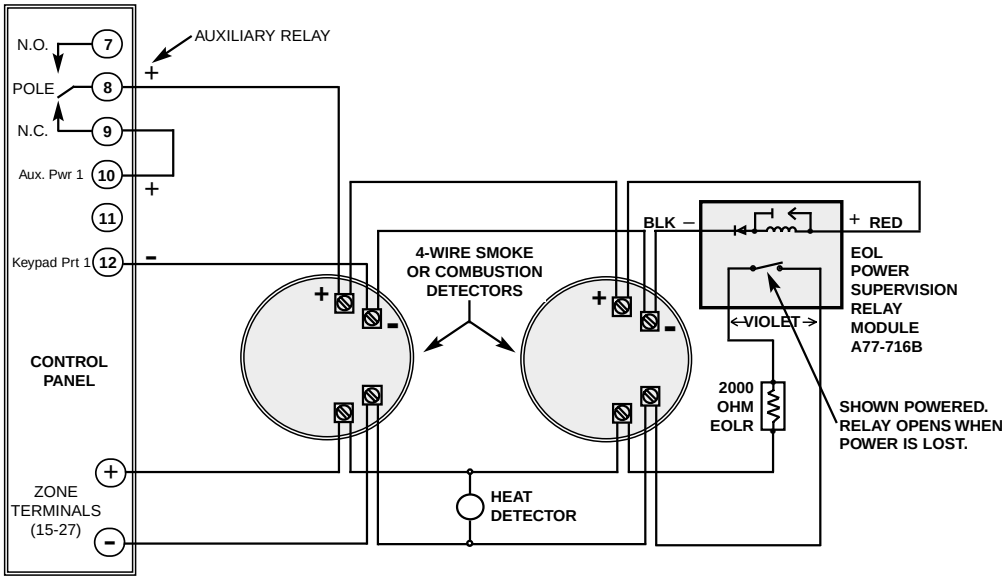

Figure 16-2. Auxiliary Relay Used for Resetting 4-Wire Smoke Detectors

Battery Saver

(3*61 = 3): When this function is selected, the auxiliary relay will normally be activated (i.e. N.O. and pole contacts will be connected, N.C. contact will be open) and will de-activate 4 hours after the start of an AC power failure. Using this feature, noncritical loads (such as supplementary keypads) which do not need to be supported for the full 24-hour battery backup period can be disconnected from the auxiliary outputs, allowing a smaller-capacity battery to be used. The relay re-activates within a few seconds after AC power restores.

Dialer Outputs

In This Section

- *Dialer Outputs Available*
- *Telephone Line Connections*
- *Telephone Line Supervision*
- *Dialer Operation*

Dialer Outputs Available

The VISTA-128FB provides one main built-in dialer for communication to the central station and one optional 5140DLM Backup Dialer, both supervised for voltage and current on the phone lines.

Telephone Line Connections

Connect the main dialer and backup dialer (if used) outputs to telephone company lines, which provide loop start service using the RJ31X Cables supplied. *Do not* connect to telephone company lines that provide ground start service.

The 5140DLM Backup Dialer mounts to the main PCB shield and connects to the main PCB J3 connector using a ribbon cable (supplied with module) as shown in the Summary of Connections diagram at the end of this manual.

Connect the earth ground screw on the 5140DLM to the earth ground screw (terminal 30) on the main PCB using 16 AWG wire.

Cut the blue jumper when the dialer outputs are connected to telephone lines, which have a telephone company MTU installed.

UL

For Listed fire central station (UL864/NFPA 72) applications, use either a LORRA alone, the main dialer with the LORRA, or use the main dialer with the 5140DLM Backup Dialer. For Listed fire remote station (UL864/NFPA72) applications, use the main dialer with the 5140DLM backup dialer. Telephone line supervision is required for UL commercial fire alarm systems when a dual line dialer is used for fire signal transmission.

Telephone Line Supervision

If the tip/ring voltage falls below approximately 25 volts, (13 volts for the main dialer when the main PCB blue jumper is cut; 13 volts for the backup dialer when its blue jumper is cut), or the handset current is less than approximately 10 mA, the supervision circuits on both dialer outputs will indicate a fault when.

Faults on the phone lines are displayed as zones 974 (main dialer) and 975 (backup dialer).

DO NOT connect both outputs to the same telephone company line.

1. To prevent the risk of shock, disconnect phone lines at telco jack before servicing the panel.
2. If the communicator is connected to a telephone line inside a PABX, be sure the PABX has a backup power supply that can support the PABX for 24 hours (central station usage) or 60 hours (remote station usage). Many PABXs are not power-backed up, and connection to such a PABX will result in a communication failure if power is lost.

Dialer Operation

When only the main dialer is enabled ([1,0] in field 3*30), the VISTA-128FB will attempt to route all calls over the main output. When both main and backup dialers are enabled ([1,1] in field 3*30), the VISTA-128FB will attempt to route all calls over the main output until a fault is detected, at which time it will attempt to use the backup output. Line faults will result in a “Zone 974-DIALER 1 FAULT” or a “Zone 975-DIALER 2 FAULT” display. The communicator will make up to 8 attempts to transmit a report to one or both telephone numbers, depending upon the report routing option programmed. After the eighth attempt, the communicator will hang up and a “COMM FAIL” will be displayed at the keypad. The number of dialer attempts are programmed in field 3*21 (default = 8; must be restricted to 3, 4 or 5 attempts if a secondary phone number is programmed).

The system will not switch to the backup dialer unless it detects a fault (low voltage and low current) on the main telephone line. This means that if a report does not go through on the main phone line due to a programming error, the backup dialer will not be activated.

The VISTA-128FB will transmit reports in the following order: Alarms (fire, medical/panic, burglary), Fire Supervisories and Troubles, remaining types of messages. See the *System Communication* section for a description of communication formats, the types of messages transmitted by the panel, and for the dialer programming defaults.

Event Log Options

In This Section

- *General Information*
- *Event Log Printer Connections*
- *Programming Event Log Options*
- *Event Logging Procedures*

General Information

This system has the ability to record up to 512 events of various types in a history log. Each event is recorded in one of six categories with the time and date of its occurrence (if real-time clock is set). These categories are:

- Alarm
- Supervisory/check
- Bypass
- Open/close
- System conditions
- Test

The log may be viewed (Display Mode) on an alpha keypad, or can be printed (Print Mode) on a serial printer (connected to the system via a 4100SM Serial Interface Module).

Event Log Printer Connections

The VISTA-128FB's event log can be printed on a local serial printer. If used, program field 3*19 must be set to "1."

This setting overrides the functions selected for INPUT 1 and OUT 2 made in field 3*20.

Connect a UL EDP Listed serial printer to the J2 connector using an ADEMCO 4100SM Interface Module as shown in *Figure 18-1*.

The printer must be configured as follows:

- 7 data bits, even parity, 1 stop bit
- 300 or 1200 baud (1200 required if alpha numeric pager interface is installed)
- Hardware handshaking using DTR signal

The 4100SM Module is supplied with a 10-foot RS232 cable. A longer cable or an extension cable can be used, but the total cable length must be less than 50 feet.

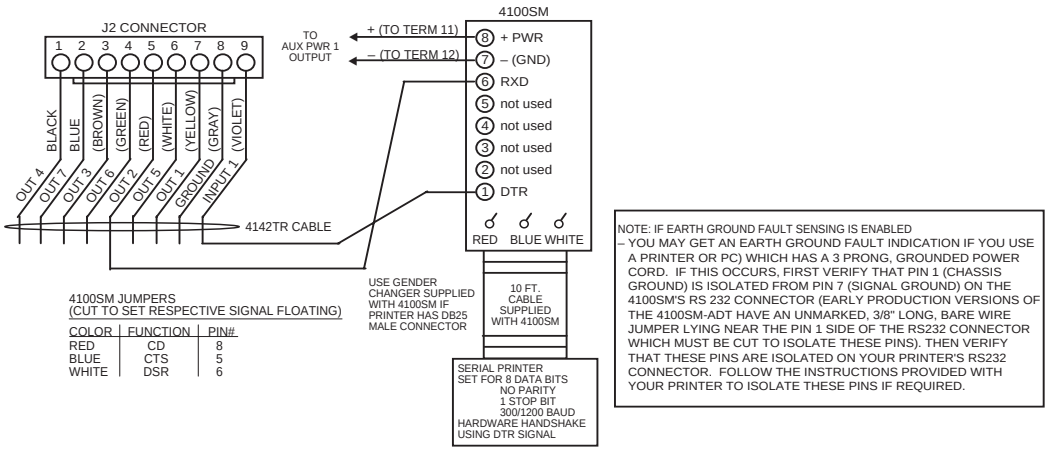

Figure 18-1: Event Log Printer Connections

The 4100SM Module must be connected to the panel using the distance of the trigger cable. The wires cannot be lengthened to mount the module in a remote location.

Most printers either ignore the CTS, DSR, and CD signals, or require them to be high (i.e., 3-15VDC as measured on RS232 DB25 Connector Pins 5, 6 & 8, respectively, with respect to Ground Pin 7). The 4100SM Module sets these pins high. If the printer being used will not operate with these pins high, then clip the blue (CTS), white (DSR), or red (CD) jumpers on the 4100SM Module to set the corresponding signal floating. Important pins on the RS232C cable are Pin 3 (data out), Pin 7 (ground) and Pin 20 (DTR - ready).

The DTR signal, as measured at 4100SM TB1, should be high (9.5-14VDC) when the printer is powered, properly connected, on-line and ready to print. The VISTA-128FB will not send printing data to the printer unless the DTR signal is high.

Programming Event Log Options

1. With at least one alpha keypad (6139/6139R) wired and set to a proper address, temporarily apply power to the system.
2. Enter Data Field Programming Mode: **[Installer Code]** + **8 0 0 0**.
3. Program the following data fields:

   1*70 EVENT LOG TYPES (**1**=enable; **0**=disable for each type)

   1*71 12/24-HOUR TIME STAMP FORMAT (**0**=12 hr; **1**=24 hr)

   1*72 EVENT LOG PRINTER ON-LINE (**0**=disable; **1**=enable)

   1*73 PRINTER BAUD RATE (**1**=300; **0**=1200)
4. Enter Report Code Programming in the #93 Menu Mode (refer to the *Programming Guide*) to program report codes for the event log (System Group #2 codes).
5. Exit Program Mode by pressing ***99**.

If you need more information about actual programming procedures, see The Mechanics of Programming section.

Event Logging Procedures

In order for proper time and date stamping to occur, the system's real-time clock must be set. Refer to the Setting the Real Time Clock section.

If you have selected the printer to be "on-line" (field 1*72), events will print automatically, as they occur. To display or print on demand, the following commands apply:

Commands	
Display Mode:	Installer or Master Code + [#] + [6] + [0]
Print Mode:	Installer or Master Code + [#] + [6] + [1]
Clear Event Log:	Installer or Master Code + [#] + [6] + [2]
To EXIT Event Log:	Press [✻] at any time.

Display/Printing: After entering either the Display or Print Mode, the following will be displayed:

```
ENTER 0 = RECENT
1 = COMPLETE
```

The Event Log holds up to 512 events, and can display or print all events in a category (complete), or only those events in a category occurring since the last “Clear Event Log” command (recent). Note that once the event log is full, the oldest event will be erased upon the logging of any new event. Press the desired Display Mode key, 0 or 1.

```
SCAN LOG BY PART
0=NO   1-8=PART #
```

The system allows viewing of any partition's event log. Enter the partition number for the partition whose events are to be displayed. Entering 0 (NO) will display all events that occurred in the system, regardless of partition. Events are displayed in chronological order, from most recent to oldest.

For display and printing purposes, events are stored on a partition-by-partition basis (except system events), and are grouped into five categories, as follows.

Use the [3] & [1] keys to scroll to the next and previous screens respectively:

```
ALARM EVENT LOG
TYPE          CCC UUU
```

Displays time/date for zones that have either caused an alarm or have been restored in selected partition.

```
CHECK EVENT LOG
TYPE          CCC UUU
```

Displays time/date for zones that have caused a trouble or supervisory condition in selected partition.

```
BYPASS EVENT LOG
TYPE          CCC UUU
```

Displays time/date for zones that have been bypassed in selected partition.

```
OP/CL EVENT LOG
TYPE          CCC UUU
```

Displays time, date, and user number for each arming and disarming of the system for the partition selected.

```
SYSTEM EVENT LOG
TYPE        CCC UUU
```

Displays time/date for system conditions, such as AC loss, communication failure, etc., regardless of partition.

ALL EVENT LOG TYPE CCC UUU

Displays all categories of events in chronological order, from most recent to oldest.

TEST EVENT LOG TYPE CCC UUU

Displays all test events.

To display the events in a particular category, press [8] at the desired category screen.

If in Display Mode, the most recent event is displayed. Press [1] to display older events; press [3] to go forward in time.

If in Print Mode, the first press of [8] will cause the printer to print all events in that category, with each event automatically scrolled on the display keypad. The following is a typical display:

P8 01/01 12:02A BURGLARY 003

Shows burglary alarm occurred in zone 3 of Partition 8, at 12:02AM on January 1.

After the last event in the selected category has been displayed (using either the [1] or [3] keys), the following will appear for a few seconds:

END OF EVENT LOG TYPE CCC UUU

CLEAR EVENT LOG 0=NO 1=YES

Press [1] if Event Log Clear function is to be performed. Clearing the event log does not erase any events from the system memory. All events in the log will still be displayed if the COMPLETE option is selected. Only those events occurring from the time of the CLEAR command will be displayed if RECENT display option is selected. Press [0] if event log is **not** to be cleared at this time.

If [1] is pressed, the following will appear:

ARE YOU SURE? 0=NO 1=YES

Press [1] if it is desired to clear the event log. Press [0] if event log is not to be cleared.

SCREEN DEFINITIONS

RECENT	Events since last CLEAR
COMPLETE	Displays all events
TYPE	Type of event (burg., fire, etc.)
CCC	Zone (contact) number
UUU	User number

4100APG Pager Interface

In This Section

- *General Information*
- *Mounting the 4100APG*
- *Wiring the 4100APG*
- *Programming the Control for the Pager*
- *4100APG LED Indications*

General Information

Whenever an event occurs on the VISTA-128FB, a message can be sent to a pager. This is accomplished by using the 4100APG Pager Interface. The 4100APG will dial and send the information to a paging service. It will transmit to the pager any message programmed to be sent to the event log printer, even if the printer is not being used.

The types of messages are divided into 6 categories: Alarms; Troubles; Bypasses; Opens/Closes; System and Test. The VISTA-128FB can be programmed so each type of message transmits to a different pager. Each type has its own programming field for the pager phone number and pager ID. Of course, these could be sent to the same pager by programming those fields with the same pager phone number and ID.

The 4100APG will hang up between each message. Multiple messages will be sent in the order received. If the 4100APG cannot make contact with the paging service, it will retry up to 10 times. If the interface loses contact with the VISTA-128FB, it will send a message to the paging service to notify the user.

The pager interface must be wired to a different phone line than the VISTA-128FB itself. Otherwise, the communication of both will not function properly.

Mounting the 4100APG

The 4100APG may be mounted in the control cabinet if space is available or, if this is not possible, on the side of the cabinet or adjacent to it. Pry off the pager interface's cover prior to wiring.

1. When the 4100APG is mounted inside the control cabinet, attach it to the cabinet's interior surface with 2-faced adhesive tape. You may leave the interface's cover off if it is mounted within the cabinet.

Do not mount the 4100APG on the cabinet door or attempt to attach it to the PC board.

2. When the 4100APG is to be mounted outside the cabinet, use the screw holes at the rear to mount horizontally or vertically (2-faced adhesive tape may be used, if preferred). You can bring wires out from the side or back (a round breakout is also available on the back).

Wiring the 4100APG

Without the Event Log Printer

The 4100APG connects to the VISTA-128FB via the 4100SM. The 4100SM wires to the J2 connector on the control via the 4142TR Cable. See *Figure 19-1*.

Connecting the 4100SM to the control:

1. 4142TR to J2 on the control
2. RED wire of 4142TR to TB1-6 of 4100SM (RxD)
3. VIOLET wire of 4142TR to TB1-1 of 4100SM (DTR)
4. TB1-7 of 4100SM to terminal 12 (Auxiliary Power -) of the control
5. TB1-8 of 4100SM to terminal 11 (Auxiliary Power +) of the control

Connecting the 4100APG to the 4100SM

1. Incoming telephone line to the 4100APG RJ11 connector labeled LINE
2. (Optional) Handset side of telephone line to 4100APG RJ11 connector labeled PHONE
3. DB25M to DB-9M Cable (supplied), from 4100SM (25 pin) to 4100APG (9 pin) connector labeled SERIAL PORT INPUT

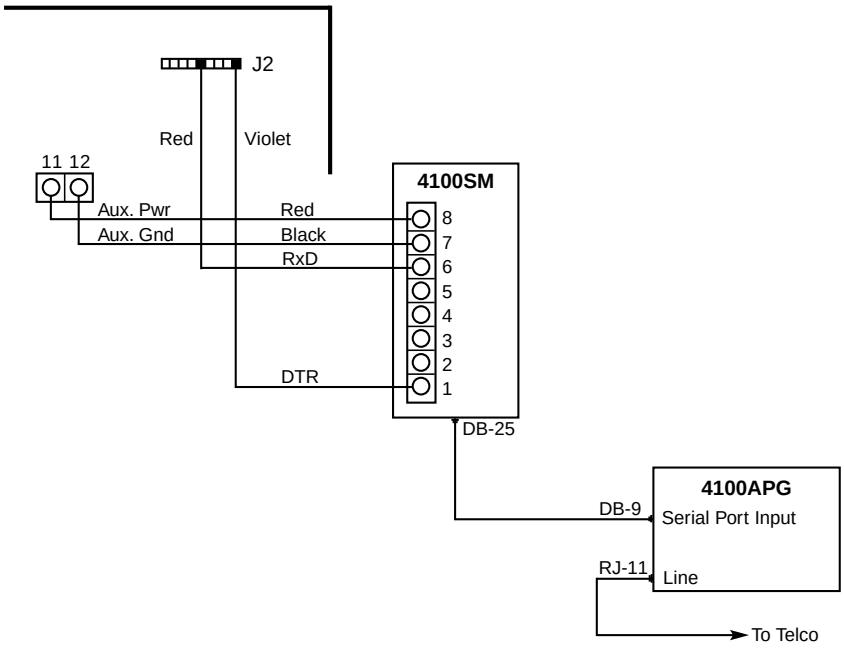

Figure 19-1: Wiring the 4100APG Without the Serial Printer

With the Event Log Printer

The VISTA-128FB will support the 4100APG and serial printer. See *Figure 19-2*.

The serial printer must be configured for 1200 baud rate, seven data bits, even parity, and one stop bit. (7/E/1).

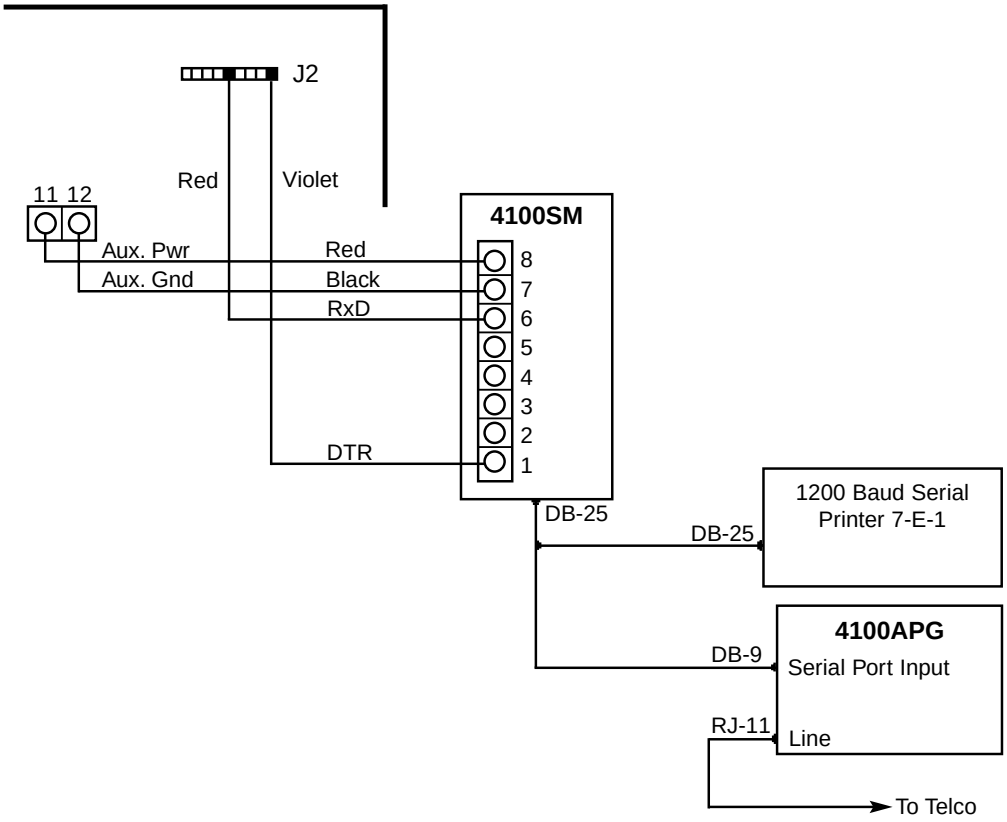

Figure 19-2: Wiring the 4100APG With the Serial Printer

When you complete the module's mounting and wiring, you should install the module's cover (with label affixed, as indicated next).

Programming the Control for the Pager

- In field *64 enter **1** to enable the 4100APG pager interface.
- In field *65 enter the phone number of the paging service for Alarm reports. Up to 17 digits may be entered.
- In field *66 enter the Pager ID number of the paging service for Alarm reports. This is the PIN number. Up to 10 digits may be entered.
- In field *67 enter the phone number of the paging service for Trouble reports. Up to 17 digits may be entered.
- In field *68 enter the Pager ID number of the paging service for Trouble reports. This is the PIN number. Up to 10 digits may be entered.

- In field *69 enter the phone number of the paging service for Bypass reports. Up to 17 digits may be entered.
- In field *70 enter the Pager ID number of the paging service for Bypass reports. This is the PIN number. Up to 10 digits may be entered.
- In field *71 enter the phone number of the paging service for Open/Close reports. Up to 17 digits may be entered.
- In field *72 enter the Pager ID number of the paging service for Open/Close reports. This is the PIN number. Up to 10 digits may be entered.
- In field *73 enter the phone number of the paging service for System reports. Up to 17 digits may be entered.
- In field *74 enter the Pager ID number of the paging service for System reports. This is the PIN number. Up to 10 digits may be entered.
- In field *75 enter the phone number of the paging service for Test reports. Up to 17 digits may be entered.
- In field *76 enter the Pager ID number of the paging service for Test reports. This is the PIN number. Up to 10 digits may be entered.
- In field 1*70 enable the events for the event log.
- In field 1*72 enable the **Printer On-Line** option. This must be turned on to allow events to be sent to the pager interface when they occur.

Field 3*19 MUST be programmed with a “1” in order for the printer and pager to operate properly.

4100APG LED Indications

Below is a table outlining the LED indications:

LED Name	**Steady**	**Blinking**	**Off**	**Pulse**
Power	OK	On Battery (B/U)	No Power	
Line	Not in use (OK)		In Use	
Call	Call in Progress	Page Retry	Idle	
Busy	Telephone Busy	No Dial Tone	OK	
Page		Page Fail	OK	Page OK
Data			No Data	Msg Data
Load			No Data	Prog Data
TRBL		Trouble	OK	

Final Power-Up Procedure

In This Section

- *Connecting the AC Transformer*
- *Earth Ground Connections*
- *Backup Power Calculations*
- *Connecting the Backup Battery to the Control*
- *Total Control Panel Load Worksheets*

Connecting the AC Transformer

Use the ADEMCO 1451 Transformer with enclosure (supplied) with the VISTA-128FB control when the PS24 Power Supply will not be used. This transformer provides 18 VAC/72 VA secondary winding for powering the control. Use the 1451-24 Transformer to power the VISTA-128FB Control and the PS24 Power Supply module when the PS24 is being used. This transformer provides an 18VAC, 72VA secondary winding for powering the control; and a 30VAC, 188VA secondary winding for powering the PS24. The control panel kit that you purchased will come with the appropriate transformer. Both transformers have a manually resettable circuit breaker mounted inside a protective metal enclosure.

Follow the instructions below for mounting the enclosure and for wiring the 18VAC winding of either transformer. Follow the instructions provided with the PS24 for wiring the 30VAC winding of the 1451-24 Transformer.

Before connecting the AC transformer, connect all zone, polling loop, keypad, auxiliary device and bell circuit wiring. Mount and wire the 1451 transformer as follows:

1. Remove the front cover of the enclosure.
2. Mount the enclosure to the wall near the VISTA-128FB panel. The enclosure has 4 mounting holes on its back surface for this purpose.
3. Run 120VAC wiring to the enclosure in conduit. ***A dedicated circuit must be used.*** Use wire nuts to splice the 120VAC wires to the transformer's white and black primary leads. Connect the earth ground post on the back of the enclosure to a good earth ground.
4. Use wire nuts to splice the transformer blue 18VAC secondary leads to 16AWG wire which is run in conduit to the panel. These wires are connected to panel terminals 1 & 2.

- Use wires having insulation rated for at least 90°C operation and suitable for non-power-limited applications.
- Use care to keep 18VAC wiring separated from all other wiring inside the panel's enclosure. This must be done by running non-power-limited 18VAC wiring into the panel's enclosure via one of the knockouts on the left-hand side of the enclosure, and then tie-wrapping these wires to the tie-wrap loops located near the knockout.

5. Replace the front cover of the enclosure and fasten with the screws supplied.

A few seconds after power is applied to the control, the keypad should display "DISARMED...READY TO ARM." If there is no keypad display, check that the 1451 Transformer is supplying proper voltage to the panel (about 17-19.5VAC when the power line voltage is 110-120VAC).

Earth Ground Connections

1. Connect the earth ground post inside the 1451 enclosure to a good earth ground (use grounding methods specified in the National Electric Code). Use a green wire nut (supplied) to secure the wire to the ground post.
2. Run a 16AWG wire from this post to the panel's earth ground terminal (terminal 30). Use a second green nut (supplied) to secure this wire to the ground post. This method of connection avoids ground loops that may occur when the 1451 and panel are connected to different earth ground systems.

The panel requires this connection in order for its lightning transient protection devices and earth ground supervision to function properly.

Backup Power Calculations

In the event of an AC power loss, the VISTA-128FB control (and PS24 Power Supply Module, if used) must be supported by a backup, rechargeable, lead acid (gel cell type) battery. When used without a PS24, a 12VDC, 12AH min./34.4AH max. battery must be connected to the VISTA-128FB control. When used with the PS24, two 12V, 7AH min./17.2AH max. batteries must be connected to the PS24. The PS24 configures these batteries to provide 24V backup power to its outputs, and 12V backup power to the control.

The battery's capacity must be sized to provide 24 hours (UL central station fire) or 60 hours (UL remote station fire) of standby time followed by 5 minutes (fire only) or 15 minutes (fire/burglary) of alarm time. This can be determined as follows:

1. If using the polling loop, fill out the Polling Loop Current Draw Worksheet, shown on next page, to determine the total current drawn from the polling loop.
2. Fill out the Total Control Panel Load Worksheet, shown on next page, to determine the total standby and alarm load drawn from the control's internal 12V power supply.
3. If using the PS24, fill out the Total PS24 Module Load Worksheet, found in the PS24's instructions, to determine the required capacity of the backup batteries that must be connected to the PS24. Select two 12V batteries from the Battery Selection Table in the PS24's instructions that have a capacity greater than or equal to the calculated capacity.

When calculating standby capacity, use 24 hours for central station fire and 60 hours for remote station fire in the standby capacity formula.

4. If not using the PS24, fill out the Battery Capacity Calculation Worksheet, following the other worksheets, to determine the required capacity for the backup battery. Select one of the batteries given in the Battery Selection Table (later in this section) which has a capacity greater than or equal to the calculated battery.

Connecting the Backup Battery to the Control

If not using the PS24, connect the battery (or batteries) to the VISTA-128FB as shown in *Figure 20-1*.

If using the PS24, connect the backup batteries to the PS24 using the cables supplied with the PS24, as shown in the PS24's instructions. Both the VISTA-128FB and the PS24 run brief battery tests every 60 seconds to determine whether the battery is connected. If a low or disconnected battery condition exists, it will be displayed on the control's keypad. Refer to the *Testing the System* section for more detailed information.

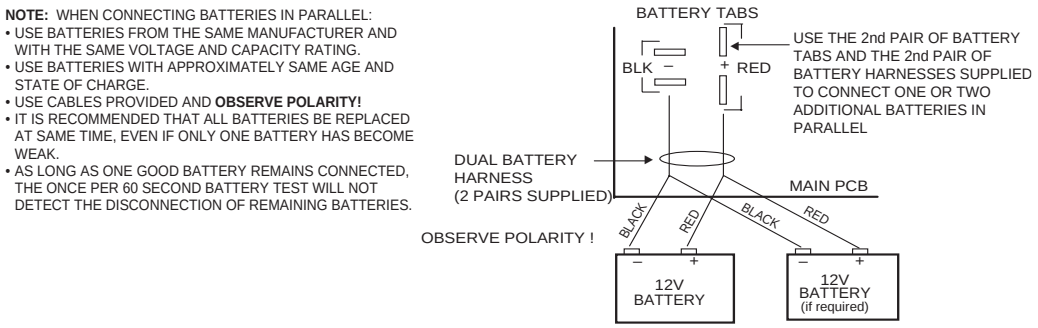

Figure 20-1: Connecting the Backup Batteries to the Control

Polling Loop Current Draw Worksheet

Refer to the *Polling Loop Expansion* section for device restrictions for fire and burglary usage.

RPM DEVICE	CURRENT	# OF UNITS	TOTAL
4194 Contact	1mA		
4192SD Photo Smoke	0.4 mA		
4192SDT Smoke w/Heat	0.4 mA		
4192CP Ion Smoke	0.4 mA		
4275 Dual PIR	1 .0mA		
4278 Quad PIR	1.0 mA		
4190 2-Zone RPM	1 mA (LOW);		
4190 2-Zone RPM	2 mA (HIGH)		
4208 8-Zone RPM	16 mA		
4191SN Recessed Contact	1.0 mA		
4939SN Surface Mount Contact	1.0 mA		
TOTAL Cannot exceed 128MA*			

* The total current cannot exceed 128mA. If total load exceeds 128mA, then a 4297 Loop Extender Module can be used. This module is powered from the panel's auxiliary power, and provides a separate polling loop output, which can support an additional 128mA load. Note that the total number of polling loop points connected to the panel cannot exceed 120.

Total Control Panel Load Worksheets

To calculate the total current for the Aux. Power 1, Aux Power 2, Bell 1 and Bell 2 outputs and polling loop current, multiply the each device's standby and/or alarm current by the number of units used.

1. Enter devices used on Aux. Power 1 output, calculate standby and alarm currents, then add to get Aux. Power 1 current subtotal.

AUX. POWER 1 OUTPUT			**Total Current**	
Device Model #	**Device Current X**	**# of Units**	**= Standby**	**Alarm**
		Aux. Power 1 Output Subtotal (terminals 10 & 11)	1.0A max	1.7A max

2. Enter devices used on Aux. Power 2 output, calculate standby and alarm currents, then add to get Aux. Power 2 current subtotal.

AUX. POWER 2 OUTPUT			**Total Current**	
Device Model #	**Device Current X**	**# of Units**	**= Standby**	**Alarm**
		Aux. Power 2 Output Subtotal (terminals 10 & 11)	1.0A max	1.7A max

3. Enter devices connected to Bell 1 output, calculate alarm currents, then add to get Bell 1 output current subtotal.

BELL 1 OUTPUT			**Total Current**	
Device Model #	**Device Current X**	**# of Units**	**= Standby**	**Alarm**
			XXXXXX	
			XXXXXX	
			XXXXXX	
			XXXXXX	
			XXXXXX	
			XXXXXX	
			XXXXXX	
		Bell 1 Output Subtotal (terminals 3 & 4) 1.7 amp max	XXXXXX	

4. Enter devices connected to Bell 2 output, calculate alarm currents, then add to get Bell 2 output current subtotal.

BELL 2 OUTPUT			**Total Current**	
Device Model #	**Device Current X**	**# of Units**	**= Standby**	**Alarm**
			XXXXXX	
			XXXXXX	
			XXXXXX	
			XXXXXX	
			XXXXXX	
			XXXXXX	
			XXXXXX	
Bell 2 Output Subtotal (terminals 5 & 6) 1.7 amp max			XXXXXX	

5. Enter the total polling loop using values calculated in the polling loop worksheet.

POLLING LOOP	**Total Current**	
	Standby	**Alarm**
(Enter worksheet total, both standby & alarm columns) Polling Loop Subtotal		

6. Enter total calculated subtotals of all listed outputs, then add to get the combined current.

COMBINED AUX. POWER, BELL AND POLLING LOOP	**Total Current**	
	Standby	**Alarm**
Aux . Power 1 Output Subtotal		
Aux . Power 2 Output Subtotal		
Bell 1 Output Subtotal		
Bell 2 Output Subtotal		
Polling Loop Subtotal		
Add all subtotals (Cannot exceed 1.0 amp max. standby; 2.3 amp max. alarm)		

These values are fixed.

VISTA-128FB PCB CURRENT	**Total Current**	
	Standby	**Alarm**
Includes 2-wire smoke detector loading on zones 1 & 2 and trigger output currents	300mA	470mA
5140DLM Backup Dialer Module	5mA (inactive)	15mA (inactive)

*5140DLM actually draws 55mA when active. However, since VISTA-128FB PCB current includes built-in main dialer current, and since main dialer is inactive when 5140DLM is active, 5140DLM imposes only 15mA added current on power supply.

7. Enter the calculated combined current, then add to total PCB current.

TOTAL CONTROL PANEL LOAD	Total Current	
	Standby	Alarm
Combined aux. power, bell, and polling loop total		
Total PCB current		
Total control panel load		

1. When not using the PS24, the total control panel standby load must be limited to 1.27A for 24-hour standby time, or to 510mA for 60-hour standby time using a 12V, 34.3AH battery connected to the control.
2. When using the PS24, skip the worksheet shown below and fill out the worksheets found in the PS24's instructions instead. The total control panel standby load must be limited to 919mA for 24-hour standby time or 345mA for 60-hour standby time using two 12V, 17.2AH batteries connected to the PS24.

Battery Capacity Calculation Worksheet

For burglary installations requiring 4-hour standby time followed by 15-minute alarm time, use a 12AH battery to support all loads up to and including the maximum system load (i.e., 1.3A standby/2.8A alarm total control panel load). For fire installations requiring 24-hour or 60-hour standby time, use the worksheet below to calculate the required battery capacity.

8. Using the total calculated power supply load (step 8), calculate the battery capacity required for the installation.

Capacity	Formula	Calc Value
Standby Capacity	total standby load X 24 or 60 hours X 1.1 contingency factor (use total standby load from previous worksheet)	
Alarm Capacity	total alarm load XX 0.083 hours (5 minutes) or 0.250 hours (15 minutes) (use total alarm load from previous worksheet)	
Total Capacity	Add standby and alarm capacities	

Battery Selection Table

(The following batteries will fit inside the VISTA-128FB cabinet)

9. Using the battery capacity value from step 8, select the appropriate battery.

12 AH	Yuasa NP12-12
14 AH	Yuasa NP7-12 (connect 2 in parallel)
17.2 AH	Yuasa NPG18-12
24 AH	Yuasa NP12-12 (connect 2 in parallel)
28 AH	Yuasa NP7-12 (connect 4 in parallel)
34.4 AH	Yuasa NPG18-12 (connect 2 in parallel)

The Mechanics of Programming

In This Section

- *Using Data Field Program Mode*
- *System and Communication Defaults*
- *Entering Data Field Programming Mode*
- *Moving from One Page of Programming to Another*
- *Viewing Data Fields*
- *Entry Errors*
- *Programming System-Wide Data Fields*
- *Programming Partition-Specific Data Fields*
- *#93 Menu Mode Programming*

Using Data Field Program Mode

Data Field Program Mode is the program mode through, which many system options are programmed. The field numbers on the program form show the number of entries required for each field. When an entry is completed, the keypad beeps three times and advances to the next field. At this point, you can either make the required entry in the new field, or press [✻] + the next field number you want to program.

There are several "question and answer" modes, which we call "Menu" modes, that can be accessed once Data Field Program Mode has been entered. These modes prompt the user for information, and for this reason, a 2-line alpha keypad (6139/6139R) is required.

System and Communication Defaults

- The system is shipped with a set of pre-programmed default values that are designed to meet the needs of many installations. If desired, these can be changed by the installer to suit specific needs.
- There are four sets of pre-programmed communication defaults available, including Low Speed, 4+2 Express, ADEMCO High Speed, and ADEMCO Contact ID. Loading one of these defaults automatically programs industry standard codes that will suit most of your needs.
- These defaults can be changed directly from the 6139(R) Alpha Keypad or they can be changed by using Compass downloading software (be sure that the software version used includes the VISTA-128FB). Downloading can be performed either remotely from an IBM-compatible computer (using an approved modem) or at the job site (direct-wire download using the 4100SM Serial Module).

The factory-loaded defaults (✻97) enable keypad addresses 00-01 only. A keypad set to one of these addresses must be used to program the system.

Entering Data Field Programming Mode

Enter Program Mode using either method A or B:

A. Press both the [✻] and [#] keys at the same time within 30 seconds after power is applied to the control.

B. Enter the [Installer Code] + [8] + [0] + [0] + [0]. The factory installer code can be changed once in the Program Mode (field ✻00).

Local keypad programming can be disabled through Compass downloading software. If this is done, programming can only be accomplished via the downloading software.

Moving from One Page of Programming to Another

The data fields are grouped into four levels (referred to as "pages"). The first page is accessed as soon as Programming Mode is entered.

The second, third, and fourth pages of data fields are indicated at the keypad by a 1, 2, and 3, respectively, in front of the 2-digit field address. The words "ALT PROGRAM MODE" is displayed along with a "100,"200," or "300," depending on which page of program fields is accessed, to indicate the higher page of fields.

1. To access the next level of fields, press *94.
2. Then press [✳] + [XX], where XX = the last two digits of the program field, and make the desired entry.
3. To return to the previous page of fields, press *99.

press *94 to move to 2nd page; press *99 to move back to 1st page

second page of fields
(1*01-1*77)

press *94 to move to 3rd page; press *99 to move back to 2nd page

third page of fields
(2*00-2*24)

press *94 to move to 4th page; press *99 to move back to 3rd page

fourth page of fields
(3*00-3*85)

Viewing Data Fields

To view the contents of a data field, press [#] plus the 2-digit field address. The field's entries will be displayed, but no changes can be made.

Entry Errors

- If an invalid address is entered, the keypad will display “FC.”
- If a program entry is improperly entered (for example, a larger number than that which is permitted), the entry position of the keypad display will go blank.
- In either of the above cases, simply re-enter [✳] + the correct field number and enter the correct data.

SUMMARY OF DATA FIELD PROGRAMMING COMMANDS	
***91**	Select partition for programming partition-specific fields
***92**	Will display the software revision level of the control panel
***93**	Enters Menu Mode Programming
***94**	Go to next page of fields
***99**	Go back to previous page of fields or exit Programming Mode with no Installer Code lockout
***98**	Exit Programming Mode with Installer Code lockout

Programming System-Wide Data Fields

Values for some programming fields are system-wide (global), and some can be different for each partition (partition-specific). Note that the partition-specific programming fields are automatically skipped when programming the global fields. If the system has only 1 partition, the partition-specific fields *will not* be automatically skipped. To program system-wide data fields, do the following:

1. Enter Program Mode: [Installer code] + **8 0 0 0**.
2. After entry into the Program Mode, the following will be displayed:

Program Mode
*Fill # View -00

3. If the control has not been programmed before, **enter *97 to load factory defaults.**
4. **Press [✳] and enter the first field number to be programmed** (for example, *00, Installer's Code). Make the desired entry. When the field is complete, the keypad will beep three times and will advance to the next field. If you do not desire to change the next field, press [✳] and enter the next field number to be programmed.

First Page of fields
(*00-*90)

press ✳99 or ✳98 to exit Program Mode

5. If the number of digits that you enter in a data field is fewer than the maximum permitted (for example, a phone number), the keypad displays the last entry and waits. To proceed, enter [✳] + the next data field you wish to program (e. g., press *08).

   Partition-specific programming fields are skipped unless entered specifically or the system is set up for 1 partition only.
6. To change to the next page of fields, press **✳94**. To return to the previous page of fields, press **✳99**.

Programming Partition-Specific Data Fields

To program partition-specific data fields once in Program Mode, do the following:

1. Press ***91**, which will prompt you for the partition number desired.
2. Enter a partition-specific field number (e.g., *09) to begin programming. When the first field's entry is completed, the next partition-specific field will automatically be displayed. When all partition-specific fields are programmed, the system returns to the global programming fields (page 1 fields). To return to the global program fields before finishing all fields, enter any global field number.
3. Repeat this procedure for each partition in the installation.

PROGRAMMING PARTITION-SPECIFIC FIELDS

Press *91 to select a partition.

↓

Enter the partition to be programmed.

↓

Enter a partition-specific field # and make entry.

↓

After partition-specific fields are programmed,
press *91 to select next partition.

Enter any global field number to return to the global fields at any time.

93 Menu Mode Programming

#93 Menu Mode (refer to the Programming Guide) is a mode through which much of the system's programming is done. It offers main menu selections for the following:

- Zone Programming.
- Expert Mode Programming.
- Report Code Programming.
- Alpha Programming.
- Device Programming.
- Output Programming.
- Relay Voice Descriptors.
- Custom Index Programming (VIP Module substitute words).
- Access Point Programming.
- Access Group Programming.
- Event/Action Programming.

Press **0** (NO) or **1** (YES) in response to the displayed menu selection. Pressing 0 will display the next choice in sequence. The keypad will then prompt you with questions regarding the programming of a particular zone or device. (Refer to #93 *Menu Mode Programming* section of the *Programming Guide* to program each option shown.)

The following is a list of commands used while in the Menu Mode.

93 Menu Mode Key Commands:

#93	Enters Menu Mode.
[✳]	Serves as ENTER key. Press to have keypad accept entry.
[#]	Backs up to previous screen.
0	Press to answer NO.
1	Press to answer YES.
00+[✳]	Escapes from Menu Mode, back into Data Field Programming Mode, if entered at the first prompt of each main menu option.

Zone Type Definitions

In This Section

- *Zone Number Designations*
- *Zone Type Definitions*

Zone Number Designations

The VISTA-128FB supports up to 128 zones of hardwire, polling loop and/or wireless protection, distributed among up to 8 partitions. The following table lists the zone numbers and the types of sensors that can be used with each in this system, and some alternate functions the zones may be used as:

Zone	Sensors
1 & 2	2-wire Smoke Detectors (if used)
5	Audio Alarm Verification (if used)
6	Cabinet Tamper/Ground Fault (if used)
7	Keyswitch (if used)
8	Latching-Type Glassbreak Detectors (if used)
1-8	Traditional Hardwired Zones
1-128	5800 Series Wireless Devices
9-128	Polling Loop Devices
995	* + 1 Panic
996	# + 3 Panic
999	* + # Panic

Zone Type Definitions

Each zone must be assigned a zone type, which defines the way in which the system responds to faults in that zone. In addition, there are three keypad-activated zones (panic keys; see note) for each partition, a polling loop supervision zone, and four RF supervisory zones, two for each RF receiver installed. Zone types are defined below.

Type 00: Zone Not Used

Program a zone with this zone type if the zone is not used.

Type 01: Entry/Exit #1 Burglary

Provides entry delay whenever the zone is faulted and the system is armed in the AWAY or STAY mode. When the panel is armed in the INSTANT or MAXIMUM mode, no entry delay is provided. Exit delay begins whenever the control is armed, regardless of the arming mode selected. These delays are programmable.

Assign this zone type to zones that are used for the primary entry and exit of the facility.

Type 02: Entry/Exit #2 Burglary

Provides a secondary entry delay whenever the zone is faulted and the system is armed in the AWAY and STAY mode. When the panel is armed in the INSTANT or MAXIMUM mode, no entry delay is provided. Secondary exit delay begins whenever the control is armed, regardless of the arming mode selected. These delays are programmable.

Assign this zone type to zones that are used for entry and exit of the facility and require more time than the primary entry and exit point. Delay times for this zone type must be greater than zone type 01 (e.g., a garage, loading dock, or basement door).

Type 03: Perimeter Burglary

Provides an instant alarm if the zone is faulted and the system is armed in the AWAY, STAY, INSTANT or MAXIMUM mode.

Assign this zone type to all zones of exterior doors and windows.

Type 04: Interior, Follower

Provides a delayed alarm (using the programmed entry delay time) if an entry/exit zone is faulted first. Otherwise it produces an instant alarm. It is active when the system is armed in the AWAY or MAXIMUM mode, but the MAXIMUM mode eliminates the entry delay.

Interior Follower zones are automatically bypassed when the panel is armed in the STAY or INSTANT mode.

Assign this zone type to a zone covering an area such as a foyer, lobby, or hallway through which one must pass upon entry or exit (to and from the keypad).

Type 05: Trouble by Day/Alarm by Night

Provides an instant alarm if the zone is faulted and the system is armed in the AWAY, STAY, INSTANT or MAXIMUM mode. During the disarmed state (day), the system annunciates a latched trouble sounding from the keypad (and a central station report, if desired).

Assign this zone type to a zone that contains a foil-protected door or window (such as in a store), or to a zone covering a “sensitive” area such as a stock room, or drug supply room. It can also be used on a zone in an area where immediate notification of an entry is desired.

Type 06: 24-Hour Silent Alarm

Sends a report to the central station but provides no keypad display or sounding. Assign this zone type to a zone containing an Emergency button.

Type 07: 24-Hour Audible Alarm

Sends a report to the central station and provides an alarm sound at the keypad and an audible external alarm. Assign this zone type to a zone containing an Emergency button.

Type 08: 24-Hour Auxiliary Alarm

Sends a report to central station and provides an alarm sound at the keypad only. **(No bell output is provided.)** Assign this zone type to a zone an Emergency button, or one containing monitoring devices such as water sensors, or temperature sensors.

Type 09: Supervised Fire (Without Verification)

Provides a fire alarm on a short circuit and a trouble condition on open circuit. A fire alarm produces a pulsing of the bell output. A zone of this type is always active and may only be bypassed by the Installer code and the Master code, if programmed in field 3∗85.

Type 10: Interior with Delay

Provides entry and exit delays (using the programmed entry/exit time), if tripped when the panel is armed in the AWAY mode and exit delay only when armed in MAXIMUM mode. **Interior with Delay zones are automatically bypassed when the panel is armed in the STAY or INSTANT mode.** Delay begins whenever sensors in this zone are violated, regardless of whether or not an entry/exit delay zone was tripped first.

Assign this zone type to a zone covering an area such as a foyer, lobby, or hallway through which one must pass upon entry or exit (to and from the keypad).

Type 16: Fire With Verification

Used when smoke alarm verification is desired on hardwire and polling loop zones containing only 2-wire or 4-wire smoke detectors. An open will initiate a trouble response and a short will initiate a fire alarm response. Initial short detection causes 7-second smoke detector power reset. Subsequent short detection within 90 seconds of reset causes fire alarm. A zone of this type is always active and may only be bypassed by the Installer code and the Master code, if programmed in field 3✻85.

Type 17: Fire Waterflow

An open on this zone causes a trouble response. Shorts, which remain present longer than the programmed time delay (fields 3*16 and 3*18) cause a fire alarm response. This zone can be silenced by either pressing [Code] + OFF or when waterflow restores (programmed in field 3*14). A zone of this type is always active and may only be bypassed by the Installer code and the Master code, if programmed in field 3✻85.

Type 18: Fire Supervisory

A short on this zone causes a supervisory response. Opens can be programmed either for a trouble or a supervisory response based on the entry in data field 3*13. A zone of this type is always active and may only be bypassed by the Installer code and the Master code, if programmed in field 3✻85. Assigned to a zone having sensors that monitor fire sprinkler systems (i.e., PIV switches, etc.).

Type 19: 24-Hour Trouble

An open or short on this zone type causes a trouble response. No external alarm sounders are activated.

Type 20: Arm-STAY✻

Causes the system to arm in the STAY mode when the zone is activated.

Type 21: Arm-AWAY✻

Causes the system to arm in the AWAY mode when the zone is activated.

Type 22: Disarm✻

Causes the system to disarm when the zone is activated.

Type 23: No Alarm Response

Used on a zone when an output relay action is desired, but with no accompanying alarm (e.g., for lobby door access).

Type 27: Access Point

Indicates that an input device (hardwired zone, wireless zone, keypad, access control relay, etc.) is controlling an access point entry (e.g., a door). The access point entry relay can be assigned to an access control relay (controlled by the VISTA-128B), ECP relay (4204), or to the access control system independent of the VISTA-128B.

Type 28: Main Logic Board (MLB) Supervision

Used to supervise the MLB. If communication between the MLB and the Vista Gateway Module (VGM) fails, a trouble condition is annunciated for the zone. Also, if the communication fails, all access control system (ACS) input zones will also display a "CHECK."

Type 29 Momentary on Exit

Used to cause an access point programmed for entry to revert to an exit point for 15 seconds. After the 15 seconds it automatically reverts back to an entry point. This zone type should be only used with VistaKey modules.

NOTE FOR PANIC KEYS: Keypad panic zones share the same zone response type for all 8 partitions, but panics may be individually enabled for each partition.

IMPORTANT! FAULT ANNUNCIATION

Polling loop and RF troubles (zones 988, 990 & 997) will report as trouble conditions only, and as such, should be assigned zone type 19 if annunciation is desired. See *Polling Loop Supervision* in the *Polling Loop Expansion* section and *RF System Operation and Supervision* in the *Wireless Zone Expansion* section for more information.

Zone Index/Zone Type Defaults

In This Section

- *Zone Index*
- *Zone Type Defaults*

Zone Index

The VISTA-128FB has 128 protection zones, as well as supervisory zones for relays, ECP devices (devices which communicate through the keypad terminals), and system troubles. These zones are designated as follows:

ZONE # RANGE	ZONE FUNCTION	ACTUAL ZONE
001 - 128	Protection zones	As indicated
601 - 632	Relay Supervisory Zones	6 + 2-digit Relay Number; e.g., Relay Number 03, if supervised, is zone 603.
800 - 831	ECP Device Supervisory Zones (includes keypads, wireless receivers, VIP Module, relay modules, etc.)	8 + 2-digit Device Address; e.g., Device Address 01, if supervised, is zone 801. The 4285/4286 VIP Module is zone 804 (since its Device Address must be set to 4).
900 - 990 & 997	System Supervisory Zones	970: Bell Output 1 971: Bell Output 2 972: Earth Ground 973: J2 Input 1 (LRR) 974: Dialer 1 975: Dialer 2 976: Auxiliary Relay 977: J2 LRR Trigger Outputs 988: 2nd Wireless Receiver - not receiving signals 990: 1st Wireless Receiver - not receiving signals 997: Polling Loop (short circuit)
991 - 999	Keypad Panics	995: 1 + ✳ panic (A key) 996: 3 + # panic (C key) 999: ✳ + # panic (B key)

Response types for zones are enabled in *Zone Programming in the #93 Menu Mode* section of the *Programming Guide*. Supervisory zones should be given a response type of either 19 (24-Hr. Trouble) or 05 (Trouble by Day, Alarm by Night).

Zone 976 is assigned to the built-in auxiliary relay output for the purpose of allowing the operation of the relay to be bypassed. Zone 977 is assigned to the J2 LRR Output Triggers for the purpose of allowing the operation of the outputs to be bypassed.

Zone Type Defaults

Following are the zone type defaults for zones on the VISTA-128FB:

Zone #	Zone Type
001	09
002	09
003	03
004	03
005	03
006	03
007	03
008	03
009–128	00
601-632	19
800-831	00

Zone #	Zone Type
970	00
971	19
972	19
973	19
974	19
975	00
988	00
990	00
995	00
996	00
997	19
999	06

Data Field Descriptions

The following is a description of all data fields provided by this control. If you have followed earlier instructions during the installation of the various devices, many of these fields will already have been programmed.

If you need more information about actual programming procedures, see *The Mechanics of Programming* section. Default values are shown in brackets [ ].

***00 INSTALLER CODE** [5140] | | |

The Installer's Code is a 4-digit code reserved for installation company use. This is the only code that can be used to enter the Program Mode from the keypad. This code cannot be used to disarm the system if not used to arm the system. This code cannot reenter Programming Mode if exited by the *98 command.

***08 TEMPORAL SIREN PULSE** [0]

If either bell is selected for pulsing (program field 3*15), this field will determine the rhythm and rate of pulsing as follows: If enabled **(1)**, pulse rate will be three dings and a pause, repeated. If disabled **(0)**, the pulse rate will be 1 sec. on, 1 sec. off.

***09 ENTRY DELAY #1** (partition-specific) [02] |

Entry delay defines the delay time which allows users to re-enter the premises through a door that has been programmed as an entry delay door and disarm the system without sounding an alarm. The system must be disarmed within this period or an alarm will occur. Enter the entry delay time (**01-15** multiplied by 15 seconds or **00** for no delay), up to a maximum delay of 225 seconds (**15** multiplied by 15 seconds), for zones assigned to Zone Type 01.

***10 EXIT DELAY #1** (partition-specific) [03] |

Exit delay defines the delay period that allows users to leave the premises through a door that has been programmed as an entry/exit delay door after arming the system without setting off the alarm. Enter the exit delay time (**01-15** multiplied by 15 seconds or **00** for no delay), up to a maximum delay of 225 seconds, for zones assigned to Zone Type 01.

***11 ENTRY DELAY #2** (partition-specific) [06] |

Entry Delay #2 is used for a secondary door requiring a longer delay than those assigned to Entry Delay #1. This delay may not exceed 45 seconds for UL commercial burglary installations.

***12 EXIT DELAY #2** (partition-specific) [08] |

Exit Delay #2 is used for a secondary door requiring a longer delay than those assigned to Exit Delay #1. This delay may not exceed 60 seconds for UL commercial burglary installations.

***13 BELL 1 TIMEOUT** (partition-specific) [04] [|]

Defines the length of time Bell Output 1 and the keypad's sounder will sound for all audible alarms (multiply entry **01-15** by 2 minutes for actual duration).

Must be a minimum of 16 minutes for UL commercial burglary installations, and 6 minutes for UL commercial fire installations.

***15 KEYSWITCH ASSIGNMENT** [0] [ ]

Enter the partition number **1-8** in which the keyswitch is being used. Enter **9** if keyswitch is to be used to silence fire bells in the event of a fire alarm. Otherwise, enter **0.**

Requires the use of zone 7 wired loop (zone 7 is no longer available as protection zone when used for keyswitch operation). If the keyswitch is used, the fire and panic alarm voltage triggers automatically become ARMING and READY status outputs for support of the Keyswitch LEDs.

Reports openings/closing by user "0" if reporting is enabled in field *40.

***16 BELL 1 CONFIRMATION OF ARMING DING** (part.-specific) [0] [ ]

Enter **1** to enable 1/2 second external alarm sounding ("ding") at the end of exit delay (or after kissoff from the central station, if sending closing reports). Otherwise enter **0**. Must be 1 for UL commercial burglary installations. Bell test on arming is required in UL commercial burglary installations.

***17 AC LOSS KEYPAD SOUNDING** [0] [ ]

Enter **1** to enable sounding at the keypad (rapid beeping) when AC power is lost (sounding occurs about 2 minutes after actual AC loss).

Enter **0** if no AC power loss keypad sounding is desired.

***19 RANDOMIZE AC LOSS REPORT** [2] [ ]

Selecting this option helps prevent an overload of AC loss messages at the central station during a community blackout.

Enter **1** to randomize AC loss reporting between 10 and 40 min. after an actual AC loss.

Enter **2** for 6-12 hours after AC loss. Enter **0** for normal AC loss reporting (about 2 minutes after actual AC loss).

***20 VIP MODULE PHONE CODE** [00, 11] [|] [|]

If a 4285/4286 Voice Module is being used, enter the 2-digit phone code used to access the system.

Enter **01-09** for first digit, and enter **11** (for ✳) or **12** (for #) for second digit.

To disable the voice module, enter **00** for the 1st digit and enter **11** for the 2nd digit of the code (disable code = 00,11). Must be disabled for commercial fire and UL commercial burglary installations.

***22 KEYPAD PANIC ENABLES** (partition-specific) [001] [| |]

995 996 999

Enter **1** to enable the appropriate keypad panics used in this partition. Otherwise enter **0**.

*23 MULTIPLE ALARMS (partition-specific) [1]

Determines whether or not more than one alarm can be sounded in a given zone during an armed period. Note that multiple alarm soundings will not occur more frequently than allowed by the programmed alarm sounder duration. This selection applies to local sounding and has no impact on the number of communication messages transmitted. Refer to *84 Swinger Suppression for limiting communication messages. Enter **1** if this feature is desired. Enter **0** if not desired. Must be 1 for UL installations.

*24 IGNORE EXPANSION ZONE TAMPER [0]

Enter **1** to disable (ignore) tamper.

Enter **0** if tamper detection is desired. Must be **0** for UL installations.

Note: Only applicable to certain polling loop sensors with tamper switches or 5800 Series transmitters. This option is used to disable tamper detection on these devices.

*25 BURG. TRIGGER FOR RESPONSE TYPE 8 [1]

Enter **1** to allow optional triggering of the voltage output on Pin 3 of the J2 header to include zone response type 8 (24-hr. auxiliary).

Enter **0** if only burglary and audible panic alarms (zone type 7) will trigger Pin 3.

*26 INTELLIGENT TEST REPORTING [0]

Enter **1** if no test report is to be sent if any other type of report was sent since the last test report.

Enter **0** if test reports are to be sent at the set intervals, regardless of whether or not other reports have been sent. Must be **0** for UL applications.

*27 TEST REPORT INTERVAL [024]

Enter the test reporting interval in hours, **001-999.**

Enter **000** if no test reporting is desired. If a test report is desired, enter a test code in *Report Code Programming in the #93 Menu Mode Programming* section of the *Programming Guide*.

Set first test report time in field *83. Max. 024 for commercial fire and UL commercial burglary installations.

*28 POWER UP IN PREVIOUS STATE [1]

Enter **1** if upon power-up, after a prolonged power loss, which caused the system's battery to discharge, the system will assume the system status prior to the power loss.

Enter **0** if the system is always to power up in a disarmed state. When the system powers up armed, an alarm will occur 3 minutes after arming if a zone is faulted. When so armed, the system reports closing as User #0 if Open/Close reporting for installer was enabled in field *39. Note that if the previous state was armed AWAY or STAY, the system may not respond to sensor changes for a small period of time (1-3 min.), which allows sensors such as PIRs to stabilize.

Note: Must be **1** for UL applications. Note that authority levels 0 or 5 cannot be used to disarm the system if the control powers up armed.

***29 QUICK ARM** (partition-specific) [1] ☐

Enter **1** to enable arming of the burglary system in AWAY, STAY, INSTANT or MAXIMUM modes by using the # key instead of the user code. When armed, the system reports closing as User 0 if Open/Close reporting for User #2 (typically a Master level user) was enabled for a given partition. Enter **0** if Quick Arm is not desired. (The user code must always be used to disarm the system.) Note that if Quick Arm is used, the Installer Code and Authority Level 5 codes cannot disarm the system.

***30 MAIN DIALER (TOUCHTONE OR ROTARY DIAL)** [0] ☐

Enter **1** if TouchTone service is being used.

Enter **0** if rotary phone service is used.

If selecting TouchTone, make sure the subscriber has requested and is paying for TouchTone service. Note that whether or not TouchTone dialing for call placement is permitted, communication by the use of DTMF signaling (ADEMCO High Speed) will still take place. See field 1*33 for TouchTone w/Rotary backup.

***31 PABX ACCESS CODE** | | | |

This field is used to enter up to four 2-digit numbers 00-09; B-F (11-15). If not required, enter nothing and proceed to next address; otherwise, enter prefix needed to obtain an outside telco line.

***32 PRIMARY SUBSCRIBER ACCT #** (partition-specific) | | | |

Enter 00-09; B-F (11-15) [15 15 15 15]

Enter a 3- or 4-digit (depending on report format) primary subscriber account number **00-09; B-F (11-15)**. Each number requires a 2-digit entry so as to allow entry of hexadecimal digits (B-F). If a 3-digit account number is to be used, enter data only in the first 3 locations, leaving the last one unfilled, by entering a *.

***33 PRIMARY PHONE NUMBER** | | | | | | | | | | | | | | | |

This field is used to enter the primary central station phone number, up to 17 digits, **0-9; enter #11 for *, #12 for #, and #13 for a 2-sec. pause.** This is the phone number the control will use to transmit Alarm and status messages to the central station. Do not fill unused spaces.

Note: Backup reporting is automatic only if a secondary phone number is entered, and no dual/split options have been programmed (the number of attempts to the primary number before dialing the secondary number is determined by field 3*21).

***34 SECONDARY PHONE NUMBER**

| | | | | | | | | | | | | | | | |

This field is used to enter the secondary phone number, up to 17 digits, **0-9; enter #11 for *, #12 for #, and #13 for a 2-sec. pause.** The secondary phone number is used if communication on the primary number is unsuccessful, or if split/dual reporting is desired. Do not fill unused spaces. If this field is programmed, a secondary subscriber account number (field *90) *must* also be programmed (can be the same as the primary account number).

*35 DOWNLOAD PHONE NUMBER

| | | | | | | | | | | | | | | | |

This field is applicable only if downloading will be **utilized.**

Enter the downloading phone number, up to 17 digits, **0-9**; **enter #11 for *, #12 for #, and #13 for a 2-sec. pause.** Do not fill unused spaces.

*36 DOWNLOAD ID NUMBER

Enter eight digits, 00-09; A-F (10-15). Default is [15, 15, 15, 15, 15, 15, 15, 15]. Only applicable if downloading will be utilized. Make entries as 2-digit numbers as follows:

00=0	02=2	04=4	06=6	08=8	10=A	12=C	14=E
01=1	03=3	05=5	07=7	09=9	11=B	13=D	15=F

*37 DOWNLOAD COMMAND ENABLES

Dialer Shutdown	System Shutdown	Not Used	Remote Bypass	Remote Disarm	Remote Arm	Upload Program	Download Program

Each of the various remote functions can either be enabled or disabled through the keypad for usage by Compass downloading software. Disabling a function means that you will not be able to perform that function from the Compass.

Enter **1** to enable a function, and **0** to disable a function. See field 1*53 to disable the Download Callback option. For commercial fire and UL commercial burglary installations, all entries must be **0**. Default is [11011111].

*38 PREVENT ZONE XXX BYPASS (partition-specific) [000]

Entering a zone number **(001-128)** prevents that zone from being bypassed by the user.

Enter **000** if this feature is not desired (all zones can be bypassed).

*39 ENABLE OPEN/CLOSE REPORT FOR INSTALLER CODE(partition-specific) [1]

Enter **1** if Open/Close reporting for the installer is desired. Otherwise enter **0**.

*40 OPEN/CLOSE REPORTING FOR KEYSWITCH [0]

Enter **1** to enable Open/Close reporting for the keyswitch.

Enter **0** if reporting is not desired.

*41 NORMALLY CLOSED OR EOLR (ZONES 3-8) [1]

Enter **0** if end-of-line resistors are to be used.

Enter **1** if end-of-line resistors are not to be used, in which case only **normally closed** devices must be used.

Must be **0** for commercial fire and UL installations.

*42 DIAL TONE PAUSE [0]

This field sets the time the system will wait for dial tone before dialing. Applies if true dial tone is not selected in field *43 or the dial tone is not actually detected.

Enter the desired wait time for dial tone detection as follows:

Enter single digit: **0** = 5 seconds; **1** = 11 seconds; or **2** = 30 seconds. Must be **0** for commercial fire and UL installations.

*43 DIAL TONE DETECTION [1] ☐

Determines whether the control will wait for a true dial tone before dialing, or if it will wait for a predetermined delay before dialing (delay is programmed in Dial Tone Pause field *42). The latter may be necessary in high-noise environment telco networks where noise can be confused with dial tone, resulting in premature dialing.

Enter **1** for true dial tone wait. If no dial tone is detected, will dial at end of pause programmed in field *42.

Enter **0** to pause for seconds entered in field *42, then dial.

*44 RING DETECTION COUNT [00] ☐☐

Only applicable if using a 4285/4286 VIP Module and/or if station-initiated downloading will be used.

Enter **00** to disable ring detection.

Enter **01-14** for ring counts of 1-14.

Enter **15** to select Answering Machine Defeat Mode, which allows the system to receive calls even when a telephone answering machine is connected to the same phone line. In the Answering Machine Mode, the caller should let the phone ring once, then hang up, and call again within 30 seconds. The system, upon hearing one ring followed by nothing, will not answer the first call, but will ready itself to pick up on the first ring of the next incoming call that is received within 30 seconds (i.e., the downloader calling again). Must be **00** for commercial fire & UL commercial burglary installations.

Note: Do not enter 00 if a 4285/4286 is installed.

*45 PRIMARY FORMAT [0] ☐

This field selects the reporting format for use on the primary telephone number.

Enter the appropriate number for the primary format as follows: **0**=Low Speed; **1**=Contact ID; **2**=ADEMCO High Speed; **3**=ADEMCO Express

*46 LOW SPEED FORMAT (PRIMARY) [0] ☐

Enter the appropriate value: **0**=ADEMCO Low Speed; **1**=Sescoa/Radionics

*47 SECONDARY FORMAT [0] ☐

This field selects the reporting format for the secondary telephone number.

Enter the appropriate number for the secondary format as follows: **0**=Low Speed; **1**=Contact ID; **2**=ADEMCO High Speed; **3**=ADEMCO Express

*48 LOW SPEED FORMAT (SECONDARY) [0] ☐

Enter the appropriate value: **0**=ADEMCO Low Speed; **1**=Sescoa/Radionics

*49 CHECKSUM VERIFICATION [0,0] ☐ ☐

Enter **1** for either or both primary/secondary formats to send a verification digit to validate the message at the receiver without having to send two message rounds. Selection is valid for 3+1, 4+1, and 4+2 reports.

Enter **0** if not desired.

*50 SESCOA/RADIONICS SELECT [0] ☐

Enter **0** if Radionics format is to be used with hexadecimal 0-9, B-F reporting. Enter **1** if Sescoa format is to be used with only numeric reporting (0-9). Note that selection applies to both primary and secondary phone numbers.

*51 DUAL REPORTING [0] ☐

This field allows all reports to be sent to both primary and secondary phone numbers.

Enter **1** if all reports are to be sent to both primary and secondary phone numbers. If used with Split Reporting option **1** (1*34), Alarms go to both primary and secondary numbers, while all other reports go to secondary only. If used with Split Reporting option **2**, alarms go to both lines, Open/Close and Test messages go to secondary only, while all other reports go to primary. If used with Split Reporting option **3**, Fire Alarms and Supervisory reports go to primary, all reports go to secondary.

*52 STANDARD/EXPANDED REPORT PRIMARY

☐	☐	☐	☐	☐	☐
Alm	Rst	Byp	Trbl	Opn/Cls	Low Batt

Enter **0** for standard or **1** for expanded reporting for the primary phone number; default is **0**. Default is [000000].

Note: Expanded overrides 4+2 format.

*53 STANDARD/EXPANDED REPORT SECONDARY

☐	☐	☐	☐	☐	☐
Alm	Rst	Byp	Trbl	Opn/Cls	Low Batt

Enter **0** for standard or **1** for expanded reporting for the secondary phone number; default is **0**. Default is [000000].

Note: Expanded overrides 4+2 format.

*56 USE ONLY LRR (LONG RANGE RADIO) [0] ☐

Enter **1** if the built-in dialer is not being used and only the LRR will be used to communicate. Otherwise enter **0**.

*57 USE LRR (LONG RANGE RADIO) IF DIALER FAILS [0] ☐

Enter **1** if LRR is to be used as a backup to the built-in dialer if the dialer fails. The radio messages begin transmitting the same time as the dialer. Once the dialer receives a kissoff, the LRR will stop transmitting no matter where it might be within its sequence. Otherwise enter **0**.

*58 LONG RANGE RADIO CENTRAL STATION #1 CATEGORY ENABLE

☐	☐	☐	☐	☐	☐
Alm	Trbl	Byp	Opn/Cls	Syst	Test

Enter **1** to enable reports for primary Subscriber ID of Long Range Radio. Otherwise, enter **0**. Default is [000000].

*59 LONG RANGE RADIO CENTRAL STATION #2 CATEGORY ENABLE

☐	☐	☐	☐	☐	☐
Alm	Trbl	Byp	Opn/Cls	Syst	Test

Enter **1** to enable reports for secondary Subscriber ID of Long Range Radio. Otherwise, enter **0**. Default is [000000].

*64 ALPHA NUMERIC PAGER INSTALLED [0] ☐

Enter **1** if the alpha numeric pager interface is installed. Otherwise enter **0**.

***65 PAGER PHONE NUMBER FOR ALARMS**

This field is used to enter the alpha numeric paging service phone number for Alarm reports. Enter up to 17 digits, **0-9; enter #11 for *, #12 for #, and #13 for a 2-sec. pause.** Do not fill unused spaces. Enter ***** after the last digit of the phone number.

***66 PAGER ID NUMBER FOR ALARMS**

This field is used to enter the Pager ID number for Alarm reports. Enter up to 10 digits. If fewer than 10 digits are required, enter ***** after the last digit, (i.e., pager pin number).

***67 PAGER PHONE NUMBER FOR TROUBLES**

This field is used to enter the alpha numeric paging service phone number for Trouble reports. Enter up to 17 digits, **0-9; enter #11 for *, #12 for #, and #13 for a 2-sec. pause.** Do not fill unused spaces. Enter ***** after the last digit of the phone number.

***68 PAGER ID NUMBER FOR TROUBLES**

This field is used to enter the Pager ID number for Trouble reports. Enter up to 10 digits. If fewer than 10 digits are required, enter ***** after the last digit, (i.e., pager pin number).

***69 PAGER PHONE NUMBER FOR BYPASSES**

This field is used to enter the alpha numeric paging service phone number for Bypass reports. Enter up to 17 digits, **0-9; enter #11 for *, #12 for #, and #13 for a 2-sec. pause.** Do not fill unused spaces. Enter ***** after the last digit of the phone number.

***70 PAGER ID NUMBER FOR BYPASSES**

This field is used to enter the Pager ID number for Bypass reports. Enter up to 10 digits. If fewer than 10 digits are required, enter ***** after the last digit, (i.e., pager pin number).

***71 PAGER PHONE NUMBER FOR OPENS/CLOSES**

This field is used to enter the alpha numeric paging service phone number for Open/Close reports. Enter up to 17 digits, **0-9; enter #11 for *, #12 for #, and #13 for a 2-sec. pause.** Do not fill unused spaces. Enter ***** after the last digit of the phone number.

***72 PAGER ID NUMBER FOR OPENS/CLOSES**

This field is used to enter the Pager ID number for Open/Close reports. Enter up to 10 digits. If fewer than 10 digits are required, enter ***** after the last digit, (i.e., pager pin number).

***73 PAGER PHONE NUMBER FOR SYSTEM**

This field is used to enter the alpha numeric paging service phone number for System reports. Enter up to 17 digits, **0-9; enter #11 for *, #12 for #, and #13 for a 2-sec. pause.** Do not fill unused spaces. Enter ***** after the last digit of the phone number.

***74 PAGER ID NUMBER FOR SYSTEM**

This field is used to enter the Pager ID number for System reports. Enter up to 10 digits. If fewer than 10 digits are required, enter ***** after the last digit, (i.e., pager pin number).

***75 PAGER PHONE NUMBER FOR TEST**

This field is used to enter the alpha numeric paging service phone number for Test reports. Enter up to 17 digits, **0-9; enter #11 for *, #12 for #, and #13 for a 2-sec. pause.** Do not fill unused spaces. Enter ***** after the last digit of the phone number.

***76 PAGER ID NUMBER FOR TEST**

This field is used to enter the Pager ID number for Test reports. Enter up to 10 digits. If fewer than 10 digits are required, enter ***** after the last digit, (i.e., pager pin number).

***79 ZONE TYPE RESTORES FOR ZONE TYPES 1-8**

1 2 3 4 5 6 7 8

Enter **1** to enable Restore reporting for individual zone types.

Enter **0** if no Restore report is desired for a zone type. Default is [00000000].

***80 ZONE TYPE RESTORES FOR TYPES 9/10**

9 10

Enter **1** to enable restore reporting for individual zone types.

Enter **0** if no restore report is desired for a zone type. Default is [00].

***83 FIRST TEST REPORT TIME** [00, 12, 00]

Enter the day (**00-07**) and time (**00-23 hours/00-59 min.**) that the first test report shall be transmitted.

Enter **00** in all locations if the test report is to be sent immediately upon exiting.

Enter **00** in the day location if the report is to be sent at the next occurrence of the time that is set.

Note: that day 01=Monday. See *Report Code Programming* (System Group 1) in the *#93 Menu Mode Programming* section of the *Programming Guide* for assigning the Test Report Code.

***84 SWINGER SUPPRESSION** (partition-specific) [03]

This option limits the number of messages (alarms or troubles) sent for a specific channel in an armed period (Swinger Suppression). Enter **01-15**. If **00** is selected, all alarm or trouble codes are reported.

Must be **00** (disabled) for commercial fire and UL installations.

***85 ENABLE DIALER REPORTS FOR PANICS & DURESS** [0000]

(partition-specific)

995 996 999 Duress

Enter **1** for each panic/duress for which reporting is desired.

Note: To enable Duress reporting a non-zero report code must be assigned to Zone 992 (duress) in *Zone Programming* in the *#93 Menu Mode Programming* section of the *Programming Guide*.

***87 ENTRY WARNING** (partition-specific) [1] ☐

Enter **0** for 3 short beeps, or **1** for slow beeps that continue for the entire entry delay period.

***88 BURG. ALARM COMM. DELAY** (partition-specific) [0] ☐

Enter **0** for no delay on burglary alarm communication. Enter **1** for 16-second delay (no delay on 24-hour reports). Must be **0** for UL installations.

***89 RESTORE REPORT TIMING** [0] ☐

Enter **0** for instant Restore report as zone restores.

Enter **1** for reporting after bell timeout if zone restored. Enter **2** for Restore report when system is subsequently disarmed. Must be **2** for commercial fire or UL commercial burglary installation.

***90 SECONDARY SUBSCRIBER ACCT #** ☐ ☐ ☐ ☐

(partition-specific) Enter 00-09; B-F (11-15) [15 15 15 15]

Enter the 3- or 4-digit number (depending on report format) for the secondary subscriber account: **00-09; B-F (11-15).** Each number requires a 2-digit entry to allow entry of hexadecimal digits (B-F). If a 3-digit number is to be used, enter data only in the first 6 locations, leaving the last two unfilled. Default=15 15 15 15. Erase the field by entering *90*. NOTE: This field *must* be programmed if a secondary phone number is used (field *34). This account number can be the same as the primary account number.

1*17 LOBBY PARTITION [0] ☐

Enter the Common Lobby Partition **(1-8).**

Enter **0** if none.

1*18 AFFECTS LOBBY (partition-specific) [0] ☐

Enter **1** if this partition "affects" the common lobby. The system will not arm the lobby unless this partition is armed already. Also, will cause lobby to disarm when this partition disarms.

Enter **0** if it does not.

1*19 ARMS LOBBY (partition-specific) [0] ☐

Enter **1** if arming this partition causes the system to attempt to arm the common lobby partition automatically. Can only arm lobby if all other affecting partitions are armed. To enable this field, field 1*18 must also be enabled (partition-specific).

Enter **0** if arming this partition will not attempt to arm the common lobby partition.

1*20 EXIT ERROR LOGIC ENABLE [0] ☐

Enter **1** to enable (entry/exit doors and interior points will be bypassed if left open).

Enter **0** if Exit Error Logic is not desired. Must be **0** for UL commercial burglary installations.

1*21 EXIT DELAY RESET [0] ☐

Enter **1** to reset exit delay to 60 seconds after door is closed.

Enter **0** if exit delay not to be reset. Must be **0** for UL commercial burglary installations.

1*22 CROSS ZONING PAIR ONE [00,00] | |

Enter the first pair of zones, which must both be faulted within a five-minute period of each other to cause an alarm.

Enter **00,00** to disable. Must be 00,00 for UL burglary Installations.

1*23 CROSS ZONING PAIR TWO [00,00] | |

Enter the second pair of zones, which must both be faulted within a five-minute period of each other to cause an alarm.

Enter **00,00** to disable. Must be 00,00 for UL burglary Installations.

1*24 CROSS ZONING PAIR THREE [00,00] | |

Enter the third pair of zones, which must both be faulted within a five-minute period of each other to cause an alarm.

Enter **00,00** to disable. Must be 00,00 for UL burglary Installations.

1*25 CROSS ZONING PAIR FOUR [00,00] | |

Enter the fourth pair of zones, which must both be faulted within a five-minute period of each other to cause an alarm.

Enter **00,00** to disable. Must be 00,00 for UL burglary Installations.

1*26 PANIC BUTTON OR SPEEDKEY [00,00,00,00] | | | |

A **B** **C** **D**

For each lettered key A-C, enter **00** to assign that key's respective panic function, or enter a speedkey macro number **01-32** to assign a particular macro to that key. For the **D** key, enter **00** to use the **D** key to select a macro to execute when key is pressed, or enter a macro number **01-32** to execute a particular macro with the **D** key.

Instead of the 32 macros, the A, B, and C keys can be programmed for any of 3 other functions.

Choice 33 = fire sounder silence. The key, when pressed, will silence fire alarms.

Choice 34 = display next fire alarm. The key, when pressed, will display the next fire alarm present in the system.

Choice 35 = display previous fire alarm. The key, when pressed, will display the previous fire alarm present in the system.

Note: Choice 33 will only function when field 3*15 is enabled for pulsing. Choices 34 and 35 should be used in conjunction with field 3*01 Fire Display Lock.

1*28 RF TX LOW BATTERY SOUND [0]

Enter **0** if audible beep and display upon RF transmitter low battery condition is desired only in disarmed state.

Enter **1** if audible beep and display is desired in both armed and disarmed states.

Must be **1** for UL.

1*29 RF TX LOW BATTERY REPORTING [0]

Enter **1** if a Trouble message for RF transmitter low battery condition is to be sent to the central station.

Enter **0** if no report for transmitter low battery is desired. Note that a Trouble message will be sent for a transmitter supervision failure, independent of this selection.

Must be **1** for UL.

1*30 RF RCVR SUPERVISION CHECK-IN INTERVAL [02] |

Enter the check-in monitoring interval in 2-hour increments.

Enter **02-15** times 2 hours (4-30 hours).

Failure of a receiver to receive any RF signal within the time entered will result in activation of the response type programmed for zone 990 for the first receiver and zone 988 for the second receiver and their related communication reports.

Enter **00** to disable receiver supervision.

Max. "2" (4 hr) for UL.

1*31 RF TRANSMITTER CHECK-IN INTERVAL [02] |

Enter the check-in monitoring interval in 2-hour increments.

Enter **02-15** times 2 hours (4-30 hours).

Failure of an individual transmitter to send a supervision signal within the time entered will result in a trouble response and related communication report. Enter **00** to disable transmitter supervision.

Max. "2" (4 hr) for UL.

1*33 TOUCH-TONE W/ROTARY BACKUP [0]

Enter **1** to enable rotary backup dialing if communicator is not successful in dialing using TouchTone DTMF on first attempt.

Enter **0** if this option is not desired.

1*34 COMM. SPLIT REPORT SELECTION [0]

This field allows certain reports to be directed to either the primary or secondary phone number.

Enter **0, 1, or 2,** in accordance with the following:

0 = split reporting disabled;

1 = Alarm, Alarm Restore and Cancel reports sent to primary telco number, all others to secondary telco number;

2 = Open/Close and Test reports sent to secondary telco number and all other reports to primary;

3 = Fire Alarms and Fire Restore reports sent to primary telco number, all reports to secondary.

See *51 for split/dual reporting combinations.

1*42 CALL WAITING DEFEAT [0]

Enter **1** for the panel to defeat Call Waiting on the first attempt (DO NOT enable unless Call Waiting is being used).

Otherwise, enter **0**.

1*43 PERMANENT KEYPAD DISPLAY BACKLIGHTING (partition-specific) [0]

Enter **1** if backlighting for the keypad display is to remain on at all times.

Enter **0** if the display should remain unlit unless a key is pressed. The backlighting then turns off again after a period of keypad inactivity. Note that when a key is pressed, display backlighting turns on for **all** keypads in that partition.

1*44 WIRELESS KEYPAD TAMPER DETECT [0] ☐

Enter **1** to enable tamper detection on wireless keypad.

Enter **0** if tamper detection is not desired. If more than 40 key depressions are received without a valid sequence (arm, disarm, etc.), the control panel will disable the wireless keypad. The inhibit is removed once a valid key sequence is received from a wired keypad.

1*45 EXIT DELAY SOUNDING (partition-specific) [0] ☐

Enter **1** if beeps from the keypads during exit delay are desired. Enter **0** for no keypad sound during exit delay.

1*47 CHIME ON BELL 1 (partition-specific) [0] ☐

Enter **1** for chime annunciation using the external alarm sounder. If not desired, enter **0**.

1*48 WIRELESS KEYPAD ASSIGNMENT [0] ☐

Enter the partition in which RF keypad is used, **1-8.**

Enter **0** if no RF keypad is used.

1*49 SUPPRESS TX SUPERVISION SOUND [1] ☐

Enter **1** to disable trouble sounding for transmitter check-in failure.

Enter **0** if audible trouble sounding is desired.

Must be **0** for UL.

1*52 SEND CANCEL IF ALARM + OFF (partition-specific) [0] ☐

Enter **1** if Cancel reports are to be sent when the system is disarmed after an alarm, regardless of how much time has gone by.

Enter **0** if Cancel reports are to be sent within bell timeout period only.

1*53 DISABLE DOWNLOAD CALLBACK [0] ☐

Enter **1** to disable the callback requirement for downloading.

Enter **0** to require a callback.

Must be **0** for commercial fire and UL commercial burglary installations.

1*56 AC 60Hz or 50Hz [0] ☐

Enter 1 for 50 Hz Standard or 0 for 60 Hz Standard. Must be set to **0** for U.S. installations (this is the default).

1*57 ENABLE 5800 RF BUTTON GLOBAL ARM [0] ☐

Enter **1** to have the system arm/disarm in accordance with the button's user's global arming settings.

Enter **0** if the button is not to be used to global arm the system (however, home partition arming will still occur).

1*58 ENABLE 5800 RF BUTTON FORCE ARM [0] ☐

Enter **1** to allow the RF button user to force a bypass of all faulted zones when arming the system. When attempting to arm the system, the keypad will beep once after pressing the button if any faulted zones are present. If this feature is enabled, the user should then press the button again within 4 seconds to force-bypass those zones and arm the system.

Enter **0** if RF button force bypass is not desired.

1*60 ZONE 5 AUDIO ALARM VERIFICATION [0] ☐

Enter **1** if 2-way audio (AAV) is being used.

Enter **0** if AAV is not being used. Must be 0 for commercial fire and UL.

1*70 EVENT LOG TYPES

Alm	Chck	Byps	O/C	Systm	Test
☐	☐	☐	☐	☐	☐

Enter **1** for each type of event for which event logging is desired.

Otherwise enter **0**. Default is [100010].

Note: Events will also be logged into the PassPoint system, if installed.

1*71 12/24 HOUR TIME STAMP FORMAT [0] ☐

Select the type of time stamping desired:

0=standard 12 hour; **1**= 24-hour format.

1*72 EVENT LOG PRINTER ON-LINE MODE [0] ☐

Enter **1** to have the printer print events as they occur.

Enter **0** to enable the printer such that the logs are printed only upon request.

1*73 PRINTER BAUD RATE [0] ☐

Enter **0** if printer is set for 1200 baud (preferred).

Enter **1** if printer is set for 300 baud.

Note: Must be 1200 if using the alpha numeric pager interface.

1*74 RELAY TIMEOUT XXX MINUTES [000] | |

Enter the relay time-out, **000-127** in multiples of 2 minutes, desired for #80 Menu Mode time driven event relay command numbers "04/09" and *Output Programming* command "56" (refer to *#93 Menu Mode Programming* (refer to the *Programming Guide*) and *Scheduling Options* sections).

1*75 RELAY TIMEOUT YYY SECONDS [000] | |

Enter the relay time-out, **000-127** seconds, desired for #80 Menu Mode time driven event relay command numbers "05/10" and Output *Programming* command "57" (refer to *#93 Menu Mode Programming* (refer to the *Programming Guide*) and *Scheduling Options* sections).

1*76 ACCESS RELAY # (partition-specific) [00] |

The system can be programmed to provide user-activated access control. If enabled, the assigned relay will pulse for 2 seconds when the user enters his code and presses 0. Enter the relay number (**01-96**) for the relay that will be used for access control. Enter **00** if not used in this partition. This function has not been UL Listed for use with the VISTA-128FB control. Must be **00** for commercial fire and UL.

Note: See the *Access Control* section for enhanced access control capability.

1*77 LOG FIRST MAINTENANCE SIGNAL [0]

Enter **0** for no logging.

Enter **1** to log first maintenance signal from each smoke detector.

2*00 NUMBER OF PARTITIONS [1]

Enter the number of partitions (**1-8)** to be used in the system.

2*01 DAYLIGHT SAVINGS TIME START/END MONTH [04,10] | |

Enter the months **(00-12)** in which daylight savings time starts and ends.

Enter **00, 00** if daylight savings time does not apply to the user's region. Standard setting for U.S. is 04,10.

2*02 DAYLIGHT SAVINGS TIME START/END WEEKEND [1,5]

Enter the start and end weekends for daylight savings time as follows: 1=first; 2=second; 3=third; 4=fourth; 5=last; 6=next to last; 7=third from last. Standard setting for U.S. is 1,5.

UL

Fields 2*05 – 2*08 must be set to 0 for UL installations.

2*05 AUTO-ARM DELAY (partition-specific) [15] |

Enter the time between the end of the arming window and the start of auto arm warning time in values of **01-14** times 4 minutes.

Enter **00** if no delay is desired.

Enter **15** if auto arming is not desired.

2*06 AUTO-ARM WARNING PERIOD (partition-specific) [15] |

Enter the time **01-15** in one-minute increments during which the user is warned by a keypad sounding and display to exit the premises prior to auto arming of the system.

Enter **00** to disable the warning period.

2*07 AUTO-DISARM DELAY (partition-specific) [15] |

Enter the time between the end of the disarming window and the start of auto disarming of the system in values of **01-14** times 4 minutes.

Enter **00** if no delay is desired.

Enter **15** if auto disarming is not desired.

2*08 FORCE ARM ENABLE (FOR AUTO-ARM) (partition-specific) [0] ☐

Enter **1** if the system should automatically bypass any faulted zones when it attempts to auto-arm. Otherwise enter **0**.

2*09 OPEN/CLOSE REPORTS BY EXCEPTION (partition-specific) [0] ☐

Enter **1** if Open/Close reports are to be sent **only if** the openings/closings occur **outside** the arm and disarm windows. Open reports will also be suppressed during the closing window in order to prevent false alarms if the user arms the system, then reenters the premises to retrieve a forgotten item. Note that openings and closings are still recorded in the event log. Enter **0** if exception reporting is not desired. Note: This field **must** be set to **1** if No Opening and No Closing reports are to be sent.

2*10 ALLOW DISARMING ONLY DURING ARM/DISARM WINDOWS (partition-specific) [0] ☐

Enter **1** if disarming of the system should be allowed only during the arming/disarming windows, or if the system is in alarm (if 2*11 is set to 1). Note that this applies **only** to operator level users. Installer, Master and Manager level users can disarm the system at any time. Enter **0** if disarming can occur at any time.

0=disable for displayed partition; **1**=enable for displayed partition

2*11 ALLOW DISARM OUTSIDE WINDOW IF ALARM OCCURS [0] ☐

Used only if field 2*10 (partition-specific field) is set to 1.

Enter **1** to allow the system to be disarmed outside the programmed disarm (opening) window if an alarm has occurred.

Enter **0** to allow disarming only during the disarm window, regardless of system status. If field 2*10 is set to 0 for a partition, this field (2*11) has no effect for that partition.

2*18 ENABLE GOTO FOR THIS PARTITION (partition-specific) [0] ☐

Enter **1** if this partition is to be accessed from another partition's keypad using the GOTO command. Otherwise enter **0**.

2*19 USE PARTITION DESCRIPTOR [0] ☐

Enter **1** if partition descriptors will be programmed. If enabled, the normal keypad display will include a partition number and four-digit descriptor.

Enter **0** to cause the keypads to display a nonpartitioned system type of display (no partition number will appear).

2*20 ENABLE J2 TRIGGERS FOR PARTITION (partition-specific) [1] ☐

2*21 SUPERVISION PULSES FOR LRR [00000] | | | | |

F B P S T

Used for supervised connection to 7920SE.

Enter **1** to enable pulses for each type of LRR trigger (Fire, Burglary, silent Panic, Supervisory, and Trouble). This option causes the control to send periodic short pulses on the J2 radio triggers. These pulses are used by the 7920SE to determine that the connections to the control are still intact.

Enter **0** if not desired.

Must be **1** for commercial fire and UL.

2*22 DISPLAY FIRE ALARMS OF OTHER PARTITIONS (partition-specific) [0] ☐

Enter **1** to allow fire alarms that occur on other partitions to be displayed at this partition's keypad(s). Otherwise, enter **0**.

2*23 DISPLAY BURG & PANIC ALARMS OF OTHER PARTITIONS [0] ☐

Enter **1** to allow burglary and panic alarms that occur on other partitions to be displayed at this partition's keypad(s). Otherwise, enter **0**.

2*24 DISPLAY TROUBLES OF OTHER PARTITIONS [0] ☐

Enter **1** to allow troubles that occur on other partitions to be displayed at this partition's keypad(s). Otherwise, enter **0**.

3*00 CHECK OR TRBL DISPLAY [0] ☐

Enter **1** to display the letters "TRBL" instead of "CHECK" when a zone or system trouble occurs.

Enter **0** to display "CHECK."

3*01 FIRE DISPLAY LOCK [0] ☐

Enter **0** to scroll all alarms.

Enter **1** to lock display of first fire alarm (press ***** to display other alarms).

3*12 ZN TYPE 18 DELAY USE [1] ☐

Enter **0** if there is to be no delay for zone type 18.

Enter **1** to use delay set in field 3*16 for zone type 18.

Note: For UL Listed installations, combined initiating device's delay and this field's delay cannot exceed 90 seconds.

3*13 SUPERVISORY ON OPEN & SHORT [0] ☐

Enter **0** if you want a supervisory response on a shorted zone and a trouble response on an open zone. Enter **1** if you want a supervisory response on either a shorted or an open zone.

3*14 WATERFLOW ALARM SILENCE OPTION [0] ☐

Enter **0** if you want waterflow supervisory zones to be silenced by entering the [Code] + OFF. Enter **1** if you want waterflow supervisory zones to silence automatically when waterflow ceases. This feature may only be set to 1 by permission of the local authority.

3*15 ALARM SOUNDS BELL 1, 2 [1,0] ☐ ☐

Bell 1 Bell 2

Enter **0** for pulsing, **1** for steady output on Bell Outputs 1 and 2. If pulsing is selected, field *08 applies.

3*16 ZONE TYPES 17 & 18 DELAY [00] |

Enter **01-15** times 2 seconds if a delay is desired for waterflow and fire supervisory zones. This may help prevent alarms due to minor fluctuations in waterflow. Otherwise, enter **00**.

3*17 ZONE 6 ALTERNATE FUNCTION ENABLE [0] ☐

Enter **1** to enable Zone 6 as a tamper zone (Bell Tamper).

3*18 EXTENDED DELAY FOR TYPES 17 & 18 [0] ☐

This option allows the delay programmed in field 3*16 for Waterflow & fire Supervisory zones to be extended by 4 times.

Enter **1** to multiply delay by 4.

Enter **0** to use delay programmed in field 3*16.

UL

For a Waterflow alarm, total maximum allowable time delay (device and panel) is 90 seconds.

For a supervisory signal, total maximum allowable time delay (device and panel) is 200 seconds.

3*19 AUXILIARY INPUT ALTERNATE FUNCTION ENABLE [0] ☐

Enter **1** to enable pins 5 & 9 as printer RXD & DTR. Enter **0** if pins are to function as selected in 3*20.

3*20 TRIGGER OUTPUTS FUNCTION SELECTION [0] ☐

Enter **0** for Long Range Radio outputs and Remote Keypad Sounder. Enter **1** for limited LORRA outputs & Keyswitch LEDs. Enter **2** for LORRA Fire output only and 5140LED connection.

3*21 MAX # OF DIALER ATTEMPTS [8] ☐

Enter the maximum number of attempts to each telephone number, **1-8**. Must be 3, 4, or 5 for NFPA72-compliant systems if a secondary number is programmed.

3*30 DIALER SELECTION [1,0] ☐ ☐

Main Backup

Enter **1** to enable each dialer that exists in the system.

3*31 BACKUP DIALER TOUCHTONE/ROTARY [0] ☐

Enter the dialing method for the system's backup dialer.

Enter **1** for TouchTone, **0** for Rotary.

3*50 ZONE TYPE RESTORE ENABLES FOR ZONE TYPES 16-18 ☐ ☐ ☐

16 17 18

Enter **1** for each zone type to send a Restore message to the central station. Default is [000]. (Must be **1** for commercial fire and UL commercial burglary installations.)

3*55 RESET ON SECOND OFF FOR BELL 1 [0] ☐

Enter **0** and the first OFF sequence ([Security Code] + OFF) after a fire alarm to de-activate sounders and/or strobe lights connected to Bell 1 output.

Enter **1** and the second OFF sequence ([Security Code] + OFF) after a fire alarm to de-activate sounders and/or strobe lights connected to Bell 1 output.

3*56 RESET ON SECOND OFF FOR BELL 2 [0] ☐

Enter **0** and the first OFF sequence ([Security Code] + OFF) after a fire alarm to de-activate sounders and/or strobe lights connected to Bell 2 output.

Enter **1** and the second OFF sequence ([Security Code] + OFF) after a fire alarm to de-activate sounders and/or strobe lights connected to Bell 2 output.

3*57 CONFIRMATION OF ARMING DING BELL 2 & AUX RELAY [0,0] ☐ ☐

Enter **1** to enable 1/2 second external alarm sounding ("ding") at the end of exit delay (or after kissoff from the central station, if sending Closing reports.) Otherwise enter **0**. (Must be **1** for UL.)

3*59 ENABLE BELL 2 & AUX RELAY CHIME ANNUNCIATION [0,0] ☐ ☐

Enter **1** to enable the chime function on Bell Output 2 and the aux. relay. Otherwise enter **0**.

3*60 BELL 2 & AUX RELAY TIMEOUT [00,00] | |

Defines the length of time Bell Output 2 and the aux. relay will sound for all audible alarms (multiply entry **01-15** by 2 minutes for actual duration).

Minimum 16 minutes for UL burglary installations.

3*61 AUX RELAY FUNCTION SELECTION [1] ☐

Select the condition that will trigger the auxiliary relay. Options are: 0 = Trouble/Supervisory; 1 = Alarm, silenced by [Code] + OFF; 2 = Smoke detector reset; 3 = Battery save; 4 = Alarm, silenced by [Code] + #67.

3*82 BURG FEATURES ON PARTITION 1 ENABLE [1] ☐

Enter **1** to enable burglary features on partition 1.

Enter **0** to disable Arm AWAY, STAY, INSTANT, MAXIMUM, Test, and Chime functions (burglary features are automatically enabled on other partitions).

3*85 SYSTEM ZONE BYPASS INHIBIT [1] ☐

Enter **0** to prevent bypass of fire and system supervisory zones.

Enter **1** to allow only the Installer Code to bypass.

Enter **2** to allow Installer or Master Code to bypass.

Note: Applies only to fire zone types 9, 16, 17, and 18 and system zones 970-977. Applies to Partition 1 only.

Scheduling Options

In This Section

- Introduction to Scheduling
- Time Window Definitions
- Open/Close Definitions
- Scheduling Menu Mode
- Scheduling Menu Structure
- Time Windows
- Daily Open/Close Schedules
- Holiday Schedules
- Time-Driven Events
- Limitation of Access Schedules
- Temporary Schedules
- User Schedule Menu Mode

Introduction to Scheduling

This section describes the scheduling features provided with this control panel.

UL

1. You must program Bypass and Auto-Arm Fail reports for UL installations.
2. Auto-disarming is not for use in UL installations.

General

- The scheduling features allow certain operations to be automated, such as auto-arming, auto-disarming, auto-bypassing and unbypassing of zones, and activating relay outputs (using 4204 modules).
- The system uses time windows (a programmed period of time with a start and stop time) for defining open/close schedules, holiday schedules, user-defined temporary schedules and access schedules for users.
- Scheduled events are programmed by user-friendly menu modes of programming (#80, #81 and #83 modes), explained in detail in this section. These menus take you step by step through the options.

Auto Arming

- The system can automatically arm (AWAY Mode) a partition at the end of a pre-determined closing (arming) time window.
- Auto arming can be delayed three ways: by use of the auto arm delay, the auto arm warning, or by manually extending the closing (arming) time window with a keypad command.
- The system can also automatically bypass any open zones when auto arming.

Auto-Arm Delay

- Auto-arm delay provides a delay (grace period) before auto arming.
- It starts at the end of the closing time window.
- The delay is set in 4-minute increments, up to 56 minutes in partition-specific program field 2*05.
- At the expiration of this delay, the auto-arm warning will start.

Auto-Arm Warning

- The auto-arm warning causes the keypad sounder to warn the user of an impending auto-arm.
- The warning can be set from 1 to 15 minutes prior to the arming in partition-specific program field 2*06.
- During this period the keypad beeps every 15 seconds and displays "AUTO ARM ALERT." During the last 60 seconds, the keypads begin to beep every 5 seconds.
- The panel arms at the conclusion of the auto-arm warning period.

Extend Closing Window

- A user can manually delay the arm (closing) time window by 1 or 2 hours.
- This is done by entering a keypad command ([User Code} + **#82**), which then prompts the user to enter the desired extension time of 1 or 2.
- This feature is useful if a user must stay on the premises later than usual.
- The auto-arm delay and warning periods will begin at the end of the extension.

Force Arm

- The force arm option causes the panel to attempt to bypass any faulted zones prior to auto-arming (panel will perform a force-arm).
- This option is set in partition-specific program field 2*08.

Auto Disarming

- The system can automatically disarm a partition at the end of a pre-determined opening (disarm) time window.
- The disarming time can be delayed by using the auto-disarm delay feature.

Disarm Delay

- Auto-disarm delay provides a delay before auto disarming. This delay is added to the end of the disarm time window.
- The delay is set in 4-minute increments, up to 56 minutes, in partition-specific program field 2*07.

Restrict Disarming

- This option allows disarming by users only during the disarm time window and during the arming time window (in case user needs to re-enter premises after manually arming the partition).
- This option is set in partition-specific field 2*10.
- If field 2*10 is set, it is highly recommended to set field 2*11 as well. This field allows the partition to be disarmed outside the arm/disarm time windows only if the partition is in alarm.

Exception Reports

- This option allows the reporting of openings and closings to the central station only if the arming and disarming occurs outside of the predetermined opening and closing time windows.
- This option is set in partition-specific field 2*09.
- The system can be programmed to send No Opening and No Closing reports if the partition is not armed or disarmed by the end of the corresponding time window.

Time-Driven Events

- By using the time windows, the system can automatically activate and de-activate relays at predetermined times to turn lights or other devices on and off.
- The time-driven events can be activated at different times in relation to the time window:
  1. At the beginning of a time window
  2. At the end of a time window
  3. During a time window active period only (on at beginning of window, off at end)
  4. At both the beginning and end of the time window (e.g., to sound a buzzer at the beginning and end of a coffee break)
- The system can perform the same actions on a daily basis, or can be made to perform an action only once (i.e., turn on the porch light this Wednesday at 8:00 p.m.).
- The system also provides up to 20 programmable "timers" available to the end user for the purpose of activating output devices at preset times and on preset days.

Limitation of Access of Users by Time

- A user's access can be limited to a certain time period, during which he can perform system functions. Outside this time, that user's code will be inactive.
- The system provides up to 8 access schedules, each consisting of two time windows (typically one for opening, one for closing) for each day of the week and two time windows for holidays.
- The access schedules are programmed in the #80 Menu Mode, and enabled for a given user when that user's access code is added to the system.
- If a user tries to operate the system outside of the schedule, the alpha keypad will display "Access Denied."

Time Window Definitions

General

- Scheduled events are based on time windows, which are simply periods of time during which an event may take place.
- A time window is defined by a “Start” time and a “Stop” time.
- The system supports up to 20 time windows.
- The windows are shared by all 8 partitions, and are used when programming the various schedules (open/close, limitation of access), as well as for time-driven event control.

Scheduling Example

To understand scheduling, take, for example, a store that has the following hours:

Monday to Thursday:	9am to 6pm
Friday	9am to 9pm
Saturday	10am to 4pm
Sunday	Closed
Holidays	Closed

Assume the owner desires the following time windows to allow time for employees to arm or disarm the system:

Monday to Thursday:	Open (disarm) Close (arm)	8am to 9am 6pm to 6:30pm
Friday	Open (disarm) Close (arm)	8am to 9am 9pm to 9:30pm
Saturday	Open (disarm) Close (arm)	9am to 10am 4pm to 4:30pm
Sunday & Holidays	Closed	

To provide these schedules, the following five time windows need to be programmed:

Window	Start	Stop	Purpose
1	8am	9am	Monday-Friday open window
2	9am	10am	Saturday open window
3	4pm	4:30pm	Saturday close window
4	6pm	6:30pm	Monday-Thurs. close window
5	9pm	9:30pm	Friday close window

Using the *#80 Menu Mode* (described later in this section), the installer can program open/close schedules by assigning each time window to a day of the week (windows are entered as 2-digit entries):

Mon	Tue	Wed	Thu	Fri	Sat	Sun	Hol
Op/Cl	Op/Cl	Op/Cl	Op/Cl	Op/Cl	Op/Cl	Op/Cl	Op/Cl
01/04	01/04	01/04	01/04	01/05	02/03	00/00	00/00

Note: 00 is entered for those days on which the store is closed.

Employees can arm and disarm the system, when programmed, within the open and close time windows without causing a report to be sent to the central station (reporting by exception, field 2*09). The system can be programmed to automatically arm/disarm in case an employee fails to arm/disarm manually (auto-arm/auto-disarm).

Open/Close Definitions

General

- The open/close scheduling is controlled by one of three schedules. Each schedule consists of one time window for openings and one time window for closings.
- There are three types of schedules available: Daily, Holiday, and Temporary.

Daily Schedule

- Each partition can have one daily schedule consisting of one opening window and one closing window per day.

Holiday Schedule

- A holiday schedule will override the regular daily schedule on selected holidays throughout the year.
- The opening and closing windows are programmed in the daily schedule, but the holidays themselves are defined in the *Holiday Schedule Programming* in the *#80 Menu Mode.*

Temporary Schedule

- The temporary schedule provides a method for the end user to override the daily and holiday schedules.
- It consists of one opening window and one closing window for each day of the week.
- The schedule takes effect for up to one week, after which it is automatically deactivated.
- This schedule is programmed using the #81 Temporary Schedule Menu Mode.

Additional Schedules

- Additional opening and closing schedules can be programmed using the *Time-Driven Event Programming*. For example, a schedule for normal store openings/closings can be programmed with a daily open/close schedule, and another open/close schedule for a lunch hour can be programmed using the time-driven event schedule programming.
- Refer to "Time-Driven Events" later in this section for detailed information.

Open/Close Reports by Exception

- The system can help reduce communication traffic to the central station by using the Open/Close Reports by Exception feature.
- The Open/Close by Exception option suppresses these reports from being sent to the central station if an arm or disarm is done ***within*** the expected time window. Reports are only sent if the arm or disarm occurs outside the assigned time window.
- The system keeps a record of ***all*** openings/closings in its event log.
- If a disarming occurs during a closing window (a person who arms the system forgets something and has to reenter), the Opening report (although outside of the opening window) will not be sent (as long as that disarming occurs within the closing window).
- This option is programmed in partition-specific program field 2*09.

The following chart gives an example of how the Open/Close by Exception reporting works.

Example of Open/Close Exception Reporting & Scheduling

6:01PM 5:59AM	**6AM 9AM**	**9:01AM 3:59PM**	**4PM 6PM**	**6:01PM 5:59AM**
Early Opening reports will be sent if system is manually disarmed before opening window begins. ** Early and Late Opening and Closing reports are programmable options in the Report Code programming section. They are not dependent on the programming of the Exception Reporting option.*	Opening Window No reports sent if system disarmed during this time window. *If an arming occurs, a Closing report is sent to the central station, regardless of how the Exception Reporting option is set.*	Auto-disarm delay begins. Auto-disarm occurs after delay (if auto-disarm is enabled). Missed Opening reports will be sent if manual disarming has not occurred at expiration of opening window. Late Opening reports will be sent if disarm occurs after the opening window expires. Early Closing reports will be sent if manual arming occurs before the closing window begins. ** Missed Opening/Closing type reports are programmed in the Report Code programming section. The Exception Reporting option must be set for these to be sent.*	Closing Window No reports sent if system is armed* during this time window. * or disarmed if user needs to re-enter premises.	Auto-arm delay begins. Auto-arm warning begins. Auto-arm occurs after warning expires (if auto-arm is enabled). Missed Closing reports will be sent if manual arming has not occurred at expiration of closing window. Late Closing reports will be sent if system is manually armed after the closing window expires.

Scheduling Menu Mode

The #80 Scheduling Menu Mode is used to program most of the scheduling and timed-event options. To enter this mode, the system must first be in the normal operating mode (all partitions disarmed). Enter **[Installer Code] + [#] + 8 + 0**.

The following can be programmed while in this mode:

- Define time windows
- Assign open/close schedules to each partition
- Assign holiday schedules
- Program time-driven events (for system functions and relay activation)
- Assign limitation of access schedules

Some scheduling features are programmed in Data Field Programming Mode (**[Installer Code] + 8 0 0 0**). The general Programming Mode scheduling fields are listed below.

System-Wide Fields:	1*74 -1*75	Relay time-out values
	2*01-2*02	Daylight savings time options
	2*11	Allow disarming outside window if alarm occurs
Partition-Specific fields:	1*76	Access control relay for this partition
	2*05	Auto-arm delay value
	2*06	Auto-arm warning time
	2*07	Auto-disarm delay value
	2*08	Force-arm enable
	2*09	Open/Close Reporting by Exception
	2*10	Restrict disarm only during windows

Report Code Programming in #93 Menu Mode

(System Group #3)	Scheduling related report codes

Event-driven relay activation options are programmed using the *Output Programming* in the #93 *Menu Mode* (refer to the *Programming Guide*). These actions are in **response** to a programmed action. However, relay activation can also be time-driven, and thus be used to initiate a desired action. Time-driven relay activation options are programmed using the *#80 Menu Mode*. Refer to the *Time-Driven Event Programming* for procedures.

Steps to Programming Scheduling Options

This section contains examples of the worksheets only. For complete worksheets, see the Programming guide accompanying these Installation Instructions.

In order to use #80 Scheduling Menu Mode, do the following:

Using the worksheets:

- Define time windows (up to 20)
- Define the daily open/close schedules (one schedule per day, per partition)
- Define the holidays to be used by the system (up to 16)
- Define limitation of access times (up to 8 schedules)
- Define the time-driven events (up to 20)

Note: Temporary schedules are programmed using the #81 Menu Mode.

Use #80 Scheduling Menu Mode to perform the following functions:

- Program the time windows
- Program the open/close schedules
- Program the time-driven events
- Program the access schedules

Scheduling Menu Structure

To program schedules, enter Scheduling Program Mode:

[Installer Code] + [#] + 80.

This mode can only be entered when all partitions are disarmed.

There are 5 sections of scheduling menus, as shown below. Entering **1** at a displayed main menu prompt will select that menu section. Prompts for programming that scheduling feature will then appear. Enter **0** to skip a section and display the next menu option.

Time Window ? 1 Yes 0 = No 0	Upon entering Schedule Menu Mode, this prompt will appear. Enter **1** to program time windows. Refer to *Time Windows Programming* later in this section for detailed procedures. Enter **0** to move to the "O/C Schedules?" prompt.
O/C Schedules ? 1 Yes 0 = No 0	Enter **1** to program opening and closing schedules. Refer to *Open/Close Schedules Programming* later in this section for detailed procedures. Enter **0** to move to the "Holidays?" prompt.
Holidays ? 1 Yes 0 = No 0	Enter **1** to program holiday schedules. Refer to *Holiday Schedule Programming* later in this section for detailed procedures. Enter **0** to move to the "Timed Events?" prompt.
Timed Events ? 1 Yes 0 = No 0	Enter **1** to program timed events for relay outputs, additional schedules, and other system functions. Refer to *Time Driven Event Programming* later in this section for detailed procedures. Enter **0** to move to the "Access Sched?" prompt.
Access Sched. ? 1 Yes 0 = No 0	Enter **1** to program access schedules. Refer to *Limitation of Access Schedules Programming* later in this section for detailed procedures. Enter **0** to move to the "Quit?" prompt.
Quit ? 1 Yes 0 = No 0	Enter **1** to quit *#80 Scheduling Menu Mode* and return to normal operating mode. Enter **0** to make any changes or review the scheduling programming options. If **0** is pressed, the "Time Window?" prompt is displayed.

Time Windows

The system provides 20 time windows that are defined with start and stop times. These windows are used for various open/close and access schedules, as well as for output controls, and are the basis of the scheduling system. These windows are shared among all 8 partitions.

Time Windows Worksheet

The following worksheet will help you define time windows and scheduling aspects of this system before programming the time window definitions for this installation. Note that time windows **can** span midnight.

Time Window Number	Start Time (HH:MM)	Stop Time (HH:MM)
1		
2		
3.....20		

A time window must have a start and a stop time.

Time Windows Programming

Enter Scheduling Mode by entering **[Installer Code + [#] + 80**. The keypad will display the *Time Window Programming* prompt.

```
Time Window  ?
1 Yes    0 = No      0
```

Enter **1** at this main menu prompt to program time windows.

```
Time Window # ?
01-20,  00 = Quit 01
```

Enter the 2-digit time window number **(01-20)** to be programmed.

Press [*] to accept the entry.

Enter **00 + [*]** at the "TIME WINDOW #?" prompt to quit time window programming and display the “Quit ?” prompt.

```
01  TIME WINDOW
00:00AM  00:00AM
```

If a time window number was entered, the cursor will be positioned on the tens of hours digit of the start of window entry.

Enter the desired start of window hour and press [*]. The cursor will move to the minutes. Enter the desired minutes and press [*]. Toggle the AM/PM indication by pressing any key 0-9 while the cursor is under the A/P position and then press [*]. Repeat this to program the stop of window entry.

When the entry is completed, the "TIME WINDOW #?" prompt is displayed again.

Enter the next time window number to be programmed and repeat the procedure.

```
Quit ?
1 = YES  0 = NO  0
```

Enter **0** at the Quit ? prompt to return to the main menu choices and continue programming.

Enter **1** to quit Scheduling Menu Mode.

Since the time windows are shared among all partitions, it is important to make sure that changing a time window does not adversely affect desired actions in other partitions.

Daily Open/Close Schedules

Open/Close Schedule Worksheet

Write in the previously defined time window numbers for open & close for each partition.

Part	Mon		Tues		Wed		Thur		Fri		Sat		Sun		Hol	
	Op	Cl	Op	Cl	Op	Cl	Op	Cl	Op	Cl	Op	Cl	Op	Cl	Op	Cl
1																
2																
3…8																

Open/Close Schedule Programming

Each partition can be assigned one daily open/close schedule, plus a holiday open/close schedule. Temporary schedules are programmed separately, using the *#81 Temporary Schedule Menu Mode.* To program additional open/close schedules, see *Time Driven Events Programming.*

After entering Scheduling Menu Mode, press **0** until the “O/C Schedules?” prompt appears.

```
O/C Schedules  ?
1 Yes    0 = No      0
```

Enter **1** to program opening and closing schedules.

```
Partition # ?
01-08,  00 = Quit 01
```

Enter the appropriate partition number for which the following open/close schedules will apply.

Enter **00 + [*]** at the "Partition #?" prompt to quit open/close schedules programming and display the “Quit ?” prompt.

```
Mon P1 OP WIND.?
00:00   00:00    00
```

Enter the time window number **01-20** for the displayed day's opening schedule beginning with Monday.

Enter **00** if no schedule is desired for a particular day. As the number is keyed in, the actual time that has been stored for that window number will be displayed as a programming aid.

Press [*] to accept the entry.

```
Mon P1 CL WIND.?
00:00   00:00    00
```

Enter the time window number for the displayed day's closing schedule. As the number is keyed in, the actual time that has been stored for the window number will be displayed.

Press the [*] key to accept the entry.

```
Tue P1 OP WIND.?
00:00   00:00    00
```

The keypad will now prompt for Tuesday's open/close schedule, etc. Follow the procedure for Monday’s prompts.

When the last day of the week has been programmed, the holiday opening and closing window prompts are displayed.

```
Hol P1 OP WIND.?
00:00 00:00      00
```

Repeat the procedure for the holiday opening and closing time windows.

Press the [*] key to accept the entry.

When the entries are completed, the “Partition #?” prompt is displayed again. Repeat this procedure for each partition in the system.

```
Quit ?
1 = YES  0 = NO  0
```

Enter **0** at the “Quit ?” prompt to return to the main menu choices and continue programming.

Enter **1** to quit Scheduling Menu Mode.

Holiday Schedules

A holiday schedule will override the regular daily open/close schedule on the programmed holidays throughout the year.

Holiday Schedule Worksheet

The system provides up to 16 holidays that can be assigned for the system. Each holiday can be assigned to any combination of partitions. List the desired holidays in a Month/Day format on the worksheet. Check the partitions for which these holidays apply.

HOL	Partition								
	Month/Day	1	2	3	4	5	6	7	8
1	/								
2	/								
3…16	/								

Holiday Schedule Programming

After entering Scheduling Menu Mode, press **0** until the "Holidays ?" prompt appears.

```
Holidays  ?
1 Yes    0 = No      0
```

Enter **1** to program holiday schedules.

```
HOLIDAY NUMBER ?
01-16,  00=Quit 01
```

Enter the 2-digit holiday number **(01-16)** to be programmed and press [∗] to accept entry.

Enter **00 + [∗]** at the "Holiday Number?" prompt to quit the holiday menus and display the "Quit ?" prompt.

```
01 ENTER DATE
      00/00
```

The cursor will be positioned on the tens of months digit. Enter the appropriate month, then press [∗] to proceed to the day field.

Enter the appropriate day for the holiday.

Press [∗] to accept the entry.

```
Part ?  12345678
 Hit 0-8  x   x
```

Holidays can be set for any partition, as follows. Press **0** to turn all partitions on or off, or use keys **1-8** to toggle the letter "x" under the partition to which this holiday will apply.

Press the [∗] key when all desired partitions have been assigned.

The "Holiday Number?" prompt will be displayed again. Repeat the procedure for each holiday to be programmed.

```
Quit ?
1 = YES  0 = NO  0
```

Enter **0** at the "Quit ?" prompt to return to the main menu choices and continue programming.

Enter **1** to quit Scheduling Menu Mode.

Time-Driven Events

These are the schedules used to activate outputs, bypass zones, etc. based on a time schedule. There are 20 of these events that may be programmed for the system, with each event governed by the previously defined time windows.

The actions that can be programmed to automatically activate at set times are: relay commands, arm/disarm commands, zone bypassing commands, and open/close access conditions.

Time-Driven Events Worksheet

Fill out the worksheet using the steps outlined below.

Sched Num.	Time Window	Days								Action Desired	Action Specifier	Activation Time
		M	T	W	T	F	S	S	H			
1												
2												
3…20												

1. **First enter the schedule number (01-20) and time window number (01-20),** and note the day of the week the action is desired.
2. **Enter the code for the desired action and action specifier.** The action codes are the events that are to take place when the scheduled time is reached. Each action also requires an action specifier, which defines what the action will affect (relay, relay group, partition, zone list, user group). The action specifier varies, depending on the type of action selected.

The following is a list of the "Action Codes" (desired actions) used when programming time-driven events. Note that these codes are independent of the relay codes programmed during the *Output Programming* in the *#93 Menu Mode* (refer to the *Programming Guide*).

Relay commands

Action Code	Action Specifier
01 Relay On	Relay #
02 Relay Off	Relay #
03 Relay Close for 2 seconds	Relay #
04 Relay Close XX minutes (set in field 1*74)	Relay #
05 Relay Close YY seconds (set in field 1*75)	Relay #
06 Relay Group On	Relay Group #
07 Relay Group Off	Relay Group #
08 Relay Group Close for 2 seconds	Relay Group #
09 Relay Group Close XX minutes (set in field 1*74)	Relay Group #
10 Relay Group Close YY seconds (set in field 1*75)	Relay Group #

Arm/Disarm Commands

Activation times 1 (Beginning), 2 (End), 3 (During) are the only valid choices for automatic arming and disarming functions.

"During" can be used to arm or disarm the control for a specific time only. For example, if "during" is selected with Arm-STAY, the system will automatically Arm-STAY at the beginning of the window and automatically disarm at the end of the window.

Action Code	Action Specifier
20 Arm-STAY	Partition(s)
21 Arm AWAY	Partition(s)
22 Disarm	Partition(s)
23 Force Arm STAY (Auto-bypass faulted zns)	Partition(s)
24 Force Arm AWAY (Auto-bypass faulted zns)	Partition(s)

1. The auto-arm warning (field 2*06) applies when using time-driven events to auto-arm.
2. Temporary schedules will not override an auto-arming or auto-disarming programmed in time-driven events.
3. The auto-arming window cannot be extended using the Installer Code + #82 Mode.

Bypass Commands

Activation times **1** (Beginning), **2** (End), **3** (During) are the only valid choices for bypass commands. If **3** (During) is selected for auto-bypassing, the system will bypass the zone(s) specified on a particular zone list at the beginning of the window and unbypass the zone(s) at the end of the window. If it is selected for auto unbypassing, the system will remove the bypass of the zone(s) at the beginning of the window and will restore the bypass of the zone(s) at the end of the window.

Action Code	Action Specifier
30 Auto bypass - Zone list	Zone list #
31 Auto unbypass - Zone list	Zone list #

Open/Close Windows

Activation time **3** (During) is the only valid choice for these commands.

Action Code	Action Specifier
40 Enable Opening Window by partition	Partition(s)
41 Enable Closing Window by partition	Partition(s)
42 Enable Access Window for access group	Access Group
50 Off-Normal Reminder	None
(Starts local keypad beeping if fire off-normal condition exists)	

3. **Enter the desired activation time,** which refers to when the action is to take place relative to the time window. Select from:

Activation time	Description
1	Beginning of time window
2	End of time window
3	During time window active period only (On at beginning of window, off at end). This can be used in conjunction with the arm, disarm or bypass commands to control a part of the system during the window. For example, if bypass is selected to activate during the window, the zones in the zone list will be bypassed at the beginning of the window and unbypassed at the end of the window.
4	Beginning and end of time window (e.g., -a Coffee break buzzer). In this example, if relay pulse is selected, the relay will pulse for 2 seconds at the beginning of the window, signaling the beginning of the coffee break. At the end of the window it will pulse again, signaling the end of coffee break.

Automatic Refresh Feature

The system automatically updates the status of all Time-Driven Events upon any of the following occurrences:

- Changing of the time or date via #63 mode
- Exiting #80 Scheduling Menu mode
- Exiting Program mode
- After a disconnect from the downloader
- On a power-up
- At Daylight Saving Time adjustment.

Time-Driven Event Programming

The following schedules can be used to activate outputs, bypass zones, arm/disarm the system, etc. based on a time schedule. Up to 20 events can be programmed for the system. Time windows must first be defined in order to be used to trigger events.

When time-driven events to control relays, the following menu items must first be programmed using *Output Programming in the #93 Menu Mode* in the *Programming Guide*):

Enter Relay No.	(reference identification number)
Relay Group	(if applicable)
Restriction	
Relay Type	(4101SN, 4204 or FSA)
ECP Address	
Relay No.	if 4204 relays

After entering Scheduling Menu Mode, press **0** until the "Timed Events ?" prompt appears.

```
Timed Events  ?
1 Yes    0 = No      0
```

Enter **1** to program timed events.

```
TIMED EVENT  # ?
01-20, 00=Quit 01
```

Enter the timed event number to be programmed **(01-20)**.

Press [∗].

The system will then prompt the user to enter the desired action to be taken.

Enter **00** at the "TIMED EVENT #?" prompt to quit the timed event menus and display the "Quit ?" prompt.

```
01 ACTION ?
none              00
```

Enter the action code for this timed-event number from the list at the left. This could be an output command, an arming command, or any other time-driven event.

Press [∗]to accept the entry. The prompt for the action specifier will display.

Action Codes:

01=Relay On
02=Relay Off
03=Relay Close for 2 seconds
04=Relay Close XX minutes
05=Relay Close YY seconds

Actions 01-05

If actions **01-05** were selected, the prompt at the right will be displayed. Enter the relay number.

Press [∗] to accept entry. The "Time Window ?" prompt appears.

Action Specifier:

```
01  RELAY # ?
                00
```

Action Codes:		**Action Specifier:**
06=Relay Group On 07=Relay Group Off 08=Relay Group Close for 2 seconds 09=Relay Group Close XX minutes 10=Relay Group Close YY seconds	**Actions 06-10** If actions **06-10** were selected, the prompt at the right will be displayed. Enter the relay group number. Press [*] to accept entry. The "Time Window ?" prompt appears.	01 RELAY GRP # ? 00
20=Arm-STAY 21=Arm AWAY 22=Disarm 23=Force Arm STAY 24=Force Arm AWAY 40=Enable Open Window by part. 41=Enable Close Window by part.	**Actions 21-24 and 40-41** If actions **21-24** or **40-41** were selected, the prompt at the right will be displayed. Enter the partition to which the action applies. Enter **0** to select all partitions. Enter a partition number again to deselect it. Press [*] to accept entry. The "Time Window ?" prompt appears.	PART? 12345678 HIT 0-8 X X
30=Auto bypass - Zone list 31=Auto unbypass - Zone list	**Actions 30-31** If actions **30-31** were selected, the prompt at the right will be displayed. Enter the zone list number that contains the zones to be bypassed or unbypassed. Press [*] to accept entry. The "Time Window ?" prompt appears.	01 ZONE LIST ? ENTER 1-8 1
42=Enable Access Window for Access group(s)	**Action 42** If action **42** was selected, the prompt at the right will be displayed. Enter the group number to which the time window will apply. Press [*] to accept entry. The "Time Window ?" prompt appears.	GROUP ? 12345678 HIT 0-8 X
50=Off-normal Reminder	**Action 50** No action specifier is required for this action since the conditions that this will occur for are system-wide.	

01 Time Window ?
00:00 00:00 01

Enter the time window number (**01-20**) for which this timed event is to occur. As the number is keyed in, the actual time that has been stored for the time window number will be displayed.

Press [*] to accept entry.

```
01 Active time ?
                0
```

Enter the activation time from **1-4** (listed below). As the number is keyed in, the activation time will be displayed. The choices are:

- **1:** Trigger at the start of the window.
- **2:** Trigger at the end of the window.
- **3:** Take effect only for the duration of the window.
- **4:** Trigger at both the start and the end of the window.

Press [*] to accept entry.

```
Days ?  MTWTFSSH
Hit 0-8   x   x
```

The system will then ask for which days the event is to be activated.

Press **0** to toggle all days on or off; or else press keys **1-8** to toggle the letter "x" under the day on or off (Monday = 1, Holiday = H = 8).

When all entries have been made, the "TIMED EVENT #?" prompt is displayed again.

Repeat the procedure for each timed event required for the installation.

```
Quit ?
1 = YES  0 = NO  0
```

Enter **0** at the "Quit ?" prompt to return to the main menu choices and continue programming. Enter **1** to quit Scheduling Menu Mode.

Limitation of Access Schedules

Limitation of Access is a means by which a user's access code is limited to working during a certain period of time. The system provides 8 Access Schedules, each of which consists of two time windows for each day of the week and two time windows for holidays (typically one for an opening time window and the second for a closing time window). A user required to follow a schedule would be assigned to an access group of the same number (1-8; i.e., schedule 1= group 1). The user's access code is assigned to a group when that user is added to the system. If no limitations apply, enter **0**.

Limitation of Access Schedule Worksheet

Enter the appropriate time window numbers for each access schedule.

Acc	Mon		Tues		Wed		Thurs		Fri		Sat		Sun		Hol	
Sch	W1	W2	W1	W2	W1	W2	W1	W2	W1	W2	W1	W2	W1	W2	W1	W2
1																
2																
3…8																

NOTE : The holidays used for the access groups are the same as those defined in the holiday schedule.

Limitation of Access Schedules Programming

To program access schedules, do the following:

Enter Scheduling Menu Mode and press **0** until the "Access Sched. ?" prompt appears.

```
Access Sched. ?
1 Yes    0 = No      0
```

Enter **1** to program access schedules.

ACCESS SCHED # ?
01-08, 00 = Quit 01

Enter the access control schedule number between **01** and **08**.

Press [*] to accept entry.

Enter **00** at the "Access Sched #?" prompt to quit the access control menus and display the Quit ? prompt.

MON A1 Window 1?
00:00 00:00 00

Enter the first time window number **(01-20)** for this access schedule for the displayed day. As the number is keyed in, the actual time that has been stored for the window will be displayed.

Press [*] to continue.

MON A1 Window 2 ?
00:00 00:00 00

Enter the second time window number from **01-20** for this access schedule for the displayed day. As the number is keyed in, the actual time that has been stored for the window will be displayed.

Press [*] to continue.

TUE A1 Window 1?
00:00 00:00 00

Repeat the procedure for the other days of the week. When the last day of the week has been programmed, the windows for holidays may be entered.

Hol A1 Window 1 ?
00:00 00:00 00

Enter the first time window number for holidays for this access schedule. As the number is keyed in, the actual time that has been stored for the window will be displayed.

Press [*] to continue.

Hol A1 Window 2 ?
00:00 00:00 00

Enter the second time window number for holidays for this access schedule. As the number is keyed in, the actual time that has been stored for the window will be displayed.

Press [*] to continue.

Quit ?
1 = YES 0 = NO 0

Enter **0** at the "Quit ?" prompt to return to the main menu choices and continue programming.

Enter **1** to quit Scheduling Menu Mode.

Temporary Schedules

Each partition can be assigned a temporary schedule, which will override the regular open/close schedule (and the holiday schedule). This schedule takes effect as soon as it is programmed and remains active for up to one week.

Temporary Schedule Worksheet

Partition/Windows		Mon	Tue	Wed	Thu	Fri	Sat	Sun
1-8	**Disarm Window**							
	Start Time HH:MM							
	Stop Time HH:MM							
	Arm Window							
	Start Time HH:MM							
	Stop Time HH:MM							

Temporary Schedules Programming

Enter **[User Code] + [#] + 81** to enter this mode. Note that only users with authority level of manager or higher can program temporary schedules. A temporary schedule only affects the partition from which it is entered.

Temporary schedules can also be reused at later dates simply by scrolling (pressing [#]) to the "DAYS?" prompt (described below) and activating the appropriate days. This should be considered when defining daily time windows.

```
Mon  DISARM WIND.
00:00AM  00:00AM
```

This prompt is for entering the start and end times of the disarm (opening) window for Monday.

Upon entry of this mode, the cursor will be positioned on the tens of hours digit of the start time of the disarm window. Enter the desired hour.

Press [∗] to move to the minutes field. The minutes are entered in the same manner.

Press [∗] to move to the AM/PM position. Pressing any key in the **0-9** range will toggle the AM/PM indication.

Repeat the procedure for the stop time entry.

Press [∗] to store the entries and move to the arming (closing) window for Monday.

Pressing [#] will scroll you through the prompts without making any changes.

```
Mon   ARM WINDOW
00:00AM  00:00AM
```

This prompt is for entering the start and end times of the arm (closing) window for Monday.

The cursor will be positioned on the tens of hours digit of the start time of the arm window. Enter the desired hour.

Press [∗] to move to the minutes field. The minutes are entered in the same manner.

Press [∗] to move to the AM/PM position. Pressing any key in the **0-9** range will toggle the AM/PM indication.

Repeat the procedure for the stop time entry.

After the windows for that day have been completed, the system will prompt for disarm and arm time windows for the next day.

Press [#] if no changes are desired.

```
Tue  DISARM WIND.
00:00AM  00:00AM
```

Repeat the procedure described above for all days of the week.

When all the windows for all the days have been completed, the system will prompt which days of the schedule are to be activated.

```
Days ?   MTWTFSS
 Hit 0-7    x  x
```

This is the prompt that actually activates the temporary schedule.

To select the days which are to be activated, enter **1-7** (Monday = 1). An "X" will appear under that day, indicating the temporary schedule for that day is active. Entering a day's number again will deactivate that day. Pressing **0** will toggle all days on/off.

The temporary schedule will only be in effect for the days which have the letter “x” under them. As the week progresses, the selected days are reset to the inactive state, but all other entries for the temporary schedule will remain programmed.

Press [∗] to store the entries or press [#] to exit the Temporary Schedule Entry Mode without making any changes.

User Scheduling Menu Mode

The system provides up to 20 "timers" which will be available to the end user for the purpose of controlling output devices (4204 relay). These timers are comparable to the individual appliance timers that might be purchased at a department store. The output devices themselves are programmed into the system by the installer during *Output Programming in the #93 Menu Mode* (refer to the *Programming Guide*). The end user needs only to know the output device number and its alpha descriptor.

The installer may set certain relays to be "restricted" during *Output Programming in the # 93 Menu Mode* (refer to the *Programming Guide*). These relays may not be controlled by the end user (this prevents the end user from controlling doors, pumps, bell outputs, etc.)

To enter this mode, the user enters **[Security Code] + # + 83.**

```
Output Timer # ?
 01-20, 00=Quit 01
```

Enter the output timer number to be programmed **(01-20)**.

Press [∗] to accept entry and move to the next prompt.

Enter **00** to quit and return to normal operating mode.

```
06 07:00P 11:45P
PORCH LITE    04
```

If that timer number has already been programmed, a summary screen will appear. In this example:

06 = Timer #

07:00PM = Start Time

11:45PM = Stop Time

PORCH LITE = Descriptor for Output Device # 4

04 = Output Device # affected by this timer

Press [∗] to continue.

```
06 ENTER OUTPUT#
PORCH LITE    04
```

Enter the desired output number **(01-32)**.

As the number is entered, the descriptor for that output device will be displayed.

Press [∗] to continue.

Entering 00 as the output number deletes the timer (Timer 06, in this example) and displays an output descriptor of "None." Output devices are programmed via #93 Menu Mode (refer to the Programming Guide).

```
06 ON TIME ?
      07:00 PM
```

The cursor will be positioned on the tens of hours digit of the ON time. Enter the desired hour.

Press [*] to move to the minutes field. The minutes are entered in the same manner.

The AM/PM indication is toggled by hitting any key in the **0-9** range while the cursor is under the AM/PM position.

Press [*] to continue.

```
06 OFF TIME ?
            11:45 PM
```

The cursor will be positioned on the tens of hours digit of the OFF. Enter the desired hour.

Press [*] to move to the minutes field. The minutes are entered in the same manner.

The AM/PM indication is toggled by hitting any key in the **0-9** range while the cursor is under the AM/PM position.

Press [*] to continue.

```
06 DAYS?  MTWTFSS
HIT 0-7      x   x
```

To select the days which are to be activated, enter **1-7** (Monday = 1). An "x" will appear under that day, indicating the output for that day is active. Entering a day's number again will deactivate that day. Pressing **0** will toggle all days on/off.

The outputs will only be in effect for the days that have the letter “x” under them. As the week progresses, the selected days are reset to the inactive state, unless the permanent option is selected (next screen prompt).

When completed, press [*] to continue.

```
06 Permanent ?
 0 = NO,1 = YES 0
```

Selecting "Permanent" **(1)** means that this schedule will be in effect on a continuous basis. An answer of **0** means that this schedule will be in effect for one week only. The letter "x" under the day will then be cleared, but all other entries for the output device will remain programmed.

Press [*] to accept entry.

The system will quit User Scheduling Mode and return to normal operating mode.

System Communication

In This Section

- *A Successful Transmission*
- *Reporting Formats*

A Successful Transmission

When a control panel calls the central station receiver, it waits to hear a “handshake” frequency from the receiver to confirm that the receiver is on-line and ready to receive its message. Once the panel hears the handshake it is programmed to listen for, it sends its message. The panel then waits for a “kissoff” frequency from the receiver acknowledging that the message was received and understood.

Once the handshake frequency is received and understood by the panel, the panel will send its message. If there is an error in the transmission (the receiver does not receive a “valid” message), the kissoff frequency will not be given by the central station receiver.

The panel will make a number of attempts to the primary telephone number and a number of attempts to the secondary telephone number (if programmed) to get a valid message through. The number of attempts that are made to each number is determined by the programming of field 3*21. If the panel is not successful after its numerous attempts, the keypad will display “Comm Failure.”

Reporting Formats

The following chart defines the three sets of (handshake/kissoff) frequencies that the panel supports and the different formats that can be sent for each.

FORMAT TIME	HANDSHAKE	TRANSMITS DATA	KISSOFF	TRANSMIT
Low Speed 3+1 4+1 4+2	1400Hz	1900Hz (10PPS)	1400Hz	Under 15 secs. (Standard report)
Sescoa/Rad 3+1 4+1 4+2	2300Hz	1800Hz (20PPS)	2300Hz	Under 10 secs. (Standard report)
Express 4+2	1400–2300Hz	DTMF (10 cps)	1400Hz	Under 3 secs.
High Speed	1400–2300Hz	DTMF (10 cps)	1400Hz	Under 5 secs.
Contact ID	1400–2300Hz	DTMF (10 cps)	1400Hz	Under 3 secs.

ADVISORY: ADEMCO's Contact ID reporting is capable of uniquely reporting all 128 zones of information, as well as openings and closings for all 128 users, to central stations equipped with the ADEMCO 685 receiver using software level 4.4 or higher. Must be level 4.7 or higher to fully support all new VISTA-128B report codes. 685 software levels below 4.4 cannot support Contact ID reporting. If you need to update your 685 receiver, contact your distributor.

The following describes each format in greater detail.

3+1 and 4+1 Standard Formats	Comprised of a 3- (or 4-) digit subscriber number and a single digit report code (e.g. Alarm, Trouble, Restore, Open, Close, etc.).
3+1 and 4+1 Expanded Formats	Comprised of a 3- (or 4-) digit subscriber number, and a two-digit report code. The first digit is displayed on the first line, followed by a second line where the first digit is repeated 3 (or 4) times and followed by the second digit. This is the “expanded” digit.
4+2 Format	Comprised of a 4-digit subscriber number and 2-digit report code.
ADEMCO Contact ID Reporting Format	Comprised of a 4-digit subscriber number, 1-digit event qualifier ("new" or "restore"), 3-digit event code, 2-digit Partition Number, and 3-digit zone number, user number, or system status number.
ADEMCO High Speed	Comprised of 13 digits as follows: A 4-digit account number + eight channels of zone information (1-8 or duress plus 9-15) + one status channel, which identifies the type of events being reported in the eight zone locations.

Report	**3+1/4+1 Standard**	**3+1/4+1 Expanded**	**4+2 Low Spd or Express**
Alarm	SSS(S) A	SSS(S) A AAA(A) Z	SSSS AZ
Trouble	SSS(S) T	SSS(S) T TTT(T) t	SSSS Tt
Bypass	SSS(S) B	SSS(S) B BBB(B) b	SSSS Bb
AC Loss	SSS(S) E	SSS(S) E EEE(E) A_C	SSSS EA_C
Low Batt	SSS(S) L	SSS(S) L LLL(L) L_B	SSSS LL_B
Open	SSS(S) O	SSS(S) O OOO(O) U	SSSS OU
Close	SSS(S) C	SSS(S) C CCC(C) U	SSSS CU
Test	SSS(S) G	SSS(S) G GGG(G)g	SSSS Gg
Restore Alarm	SSS(S) R	SSS(S) R RRR(R) Z	SSSS RZ
AC Restore	SSS(S) R_A	SSS(S) R_A $R_AR_AR_A(R_A)A_c$	SSSSR_A A_c
LoBat Res.	SSS(S) R_L	SSS(S) R_L $R_LR_LR_L(R_L)L_B$	SSSS R_LL_B
Trouble Res.	SSS(S) R_T	SSS(S) R_T $R_TR_TR_T$ (R_T)t	SSSS R_Tt
Bypass Res.	SSS(S) R_B	SSS(S) R_B $R_BR_BR_B$ (R_B)b	SSSS R_Bb

Where:

SSS or	SSSS =	Subscriber ID	C =	Close Code - 1st Digit
	A =	Alarm Code-1st digit	U =	User Number - 1st & 2nd digits
	Z =	Typically Zone Number* - 2nd digit	Gg =	Test Code - 1st & 2nd digits
	Tt =	Trouble Code - 1st & 2nd digits	R =	Restore Code (Alarm) - 1st & 2nd digits
	Bb =	Bypass Code - 1st & 2nd digits	R_Tt =	Restore Code (Trbl) - 1st & 2nd digits
	EA_C =	AC Loss Code - 1st & 2nd digits	R_Bb =	Restore Code (Byps) - 1st & 2nd digits
	LL_B =	Low Battery Code - 1st & 2nd digits	R_AA_C =	Restore Code (AC) - 1st & 2nd digits
	O =	Open Code - 1st Digit	R_LL_B =	Restore Code (Bat) - 1st & 2nd digits

*Zone numbers for: [✳] + [#], or [B] = 999; [3] + [#], or [C] = 996;
[1] + [✳], or [A] = 995; Duress = 992

ADEMCO High Speed Reporting events by channel:

Channels 1 through 8 could have one of the following conditions:

1 = NEW EVENT
2 = OPENING (Status Channel Always = 2)*
3 = RESTORE
4 = CLOSING (Status Channel Always = 4)*
5 = NORMAL, NO EVENT TO REPORT
6 = PREVIOUSLY REPORTED, NOT YET RESTORED

* NOTE: Channel 1 will contain the user ID 1-9, A-F if Open/Close reporting is enabled.

The status channel might have one of the following conditions:

1 = DURESS (For Duress Plus Channels 9-15 Only)
2 = OPENING
3 = BYPASS (For Channels 1-8 Only)
4 = CLOSING
5 = SUPERVISORY/TROUBLE (For Channels 1-8 Only)
6 = SYSTEM STATUS:

- AC LOSS in Channel 1
- LOW BATTERY in Channel 2
- TIME SET in Channel 3
- LOG CLEAR in Channel 3
- LOG 50% FULL in Channel 3
- LOG 90% FULL in Channel 3
- LOG OVERFLOW in Channel 3
- POWER ON RESET in Channel 4
- WALK-TEST START, END in Channel 8

7 = NORMAL ALARM STATUS (Channels 1-8 Only)
9 = TEST REPORT

Explanation of Channels 9-15:

If there is a 1 in the status channel, and:

1 in the 1st location = Duress

1 in Channels 9-15 = Zone alarm on those channels

3 in Channels 9-15 = Restore on those channels

6 in Channels 9-15 = Previously reported alarm–not restored

A typical high-speed report may look like this:

1234 5115 5555 7 (Acct #1234 with alarms on channels 2 and 3)

1234 5555 1555 1 (Acct #1234 with alarm on channel 12)

LIMITATIONS

1. When using ADEMCO High-Speed, remember there are only 15 channels available, plus a duress channel. If more than 15 zones are being used, they will have to share channels.
2. With ADEMCO High-Speed reporting, channels 9-15 cannot report troubles or bypasses. Use these channels for zones that will not report these conditions.
3. Only user numbers 1-15 can be uniquely reported with Open/Close reports in ADEMCO High-Speed.

ADEMCO Contact ID Reporting takes the following format:

CCCC QEEE GG ZZZ	CCCC =	Customer (subscriber) ID
	Q =	Event qualifier, where:
		E = new event, and R = restore
	EEE =	Event code (3 hexadecimal digits)
	GG =	Partition number (system messages show “00”)
	ZZZ =	Zone number for an alarm, or user number for Open/Close reports. System status messages (AC Loss, Walk-Test, etc.) contain zeroes.

TABLE OF CONTACT ID EVENT CODES

Code	Definition	Code	Definition
110	Fire Alarm	406	Cancel by User
111	Smoke Alarm (Fire w/Verification)	407	Remote Arm/Disarm (Download)
113	Water Flow Alarm	408	Quick Arm
121	Duress	409	Keyswitch O/C
122	Silent Panic	411	Call-back Requested
123	Audible Panic	421	Access Denied
124	Duress Access Grant	422	Access Granted
125	Duress Egress Grant	423	Door Force Open
131	Perimeter Burglary	424	Egress Denied
132	Interior Burglary	425	Egress Granted
133	24-Hour Burglary	426	Door Prop Open
134	Entry/Exit Burglary	427	Access Point DSM Trouble
135	Day/Night Burglary	428	Access Point RTE Trouble
140	ACS Zone Alarm	429	ACS Program Entry
142	Polling Loop Short Alarm	430	ACS Program Exit
150	24-Hour Auxiliary	431	ACS Threat Change
200	Fire Supervisory	432	Access Point Relay/Trigger Fail
301	AC Loss	433	Access Point DSM Shunt/Unshunt
302	Low System Battery	434	Access Point RTE Shunt
305	System Reset	441	Armed STAY
306	Program Tamper	451	Early Open/Close
308	System Shutdown	452	Late Open/Close
309	Battery Test Fail	453	Fail to Open
310	Ground Fault	454	Fail to Close
313	System Engineer Reset	455	Auto-arm Fail
320	ACS Relay Supervision	457	Exit Error by User
321	Bell 1 Trouble	459	Recent Close
322	Bell 2 Trouble	501	ACS Reader Disable
332	Poll Loop Short-Trouble	520	ACS Relay Disable
333	Expansion Module Failure	521	Bell 1 Bypass
338	ACS Module Low Battery	522	Bell 2 Bypass
339	ACS Module Reset	524	Auxiliary Relay Bypass
342	ACS Module AC Loss	551	Main/Backup Dialer Bypass
343	ACS Module Self-Test Fail	570	Bypass
344	RF Jam	576	ACS Zone Shunt
351	Main Dialer Trouble	577	ACS Point Bypass
352	Backup Dialer Trouble	602	Communicator Test
354	ACS RS232 Fail	604	Fire Test
373	Fire Loop Trouble	606	Listen-In to Follow
374	Exit Error by Zone	607	Burglary Walk-Test
380	Trouble (global)	608	Off-Normal
381	Loss of Supervision (RF)	611	Fire Walk-Test – Point Tested
382	Loss of RPM Supervision	612	Fire Walk-Test – Point Not Tested
383	RPM Sensor Tamper	621	Event Log Reset
384	RF Transmitter Low Battery	622	Event Log 50% Full
385	High Sensitivity Maintenance Signal	623	Event Log 90% Full
386	Low Sensitivity Maintenance Signal	624	Event Log Overflow
389	Detector Self-Test Failed	625	Time/Date Reset
401	O/C by User	631	Exception Schedule Change
403	Power-Up Armed/Auto-Arm	632	Access Schedule Change

Downloading Primer

(Remote downloading is not a UL Listed feature)

In This Section

- *General Information*
- *Getting On-Line with a Control Panel*
- *On-Line Control Functions*
- *Access Security*
- *Connecting a 4100SM Module for Direct-Wire Downloading*

General Information

Downloading allows the operator to remotely access, program, and control the security system over normal telephone lines. Anything that can be done directly from the keypad can be done remotely, using ADEMCO's COMPASS downloading software. To communicate with the control panel, the following is required:

Using Compass

1. An IBM PC compatible 486 33MHz PC or better with 30 MB of available hard disk space and at least 8MB of RAM (12MB is preferred). Windows 3.X, Windows 95, or Windows NT.
2. One of the following modems:
   - Hayes Smartmodem 1200 (external: level 1.2 or higher; internal: level 1.1 or higher)
   - Hayes Optima 24 + Fax 96 external
   - Hayes Optima 336
   - BizComp Intellimodem 1200 w/volume
   - BizComp Intellimodem 2400

   Other brands are not compatible, even if claimed to be 100% compatible.
3. COMPASS DOWNLOADING software may be purchased from ADEMCO. This software is available on 3-1/2" diskettes or CD ROM, and includes a complete User's Manual. It may also be downloaded from the ADEMCO web page. The web address is http://www.ademco.com.

Internal modems must have a 4-position DIP switch. Modems with a 6-position DIP switch will not work.

Alternatively, you may use a 4100SM interface module to "direct-wire" the control panel to your computer at the site.

Getting On-Line with a Control Panel

At the protected premises, the Control panel must be connected to the existing telephone line (refer to the *System Communication* section). No programming of the panel is required before downloading to an initial installation.

To download, do the following:

1. Enter the **[Installer Code] + [#] + [5]**. The panel temporarily enables a ring count of 5 and sets the Download Callback option to "1" (callback not required).
2. Call the panel using the downloader software set to "First Communication" Mode.
3. The downloader will establish a session with no callback. The panel information can then be downloaded.
4. In order to remotely access, control, or program the alarm panel, a "link" must be established between the computer and the control panel, as follows:
   a. The computer calls up the control panel. (The phone number for each customer is entered into the customer's account file on the computer.)
   b. The control panel "answers" at the pre-programmed ring count and executes a handshake with the computer.
   c. The computer sends a request for callback to the control, unless callback is not required.
   d. The panel acknowledges the request and hangs up. During the next few seconds, the control will process the request, making sure certain encrypted information received from the computer matches its own memory.
   e. Upon a successful match, the control panel will seize the phone line and call the computer back, unless callback is not required. (The phone number to which the computer's modem is connected must be programmed into the control field *35.)
   f. The computer answers, usually by the second ring, and executes a handshake with the panel.
   g. The panel then sends other default information to the computer. If this information matches the computer's information, a successful link is established. This is known as being “On-line.”

1. Alarms and Trouble responses and reports are disabled during actual uploading or downloading sessions. If you are on-line, but not actively uploading or downloading, all alarms will report immediately. All other reports will be delayed until you complete the session.
2. The keypads remain active when on-line with a control, but are inactive during actual uploading or downloading sessions.

On-Line Control Functions

The following functions can be performed while on-line with a control panel:

- Arm the system in the AWAY Mode; disarm the system
- Bypass a zone
- Force the system to accept a new program download
- Shut down communication (dialer) functions (non-payment of monitoring fees in an owned system)
- Shut down all security system functions (non-payment for a leased system)
- Inhibit local keypad programming (prevents takeover of your accounts)
- Leave a message for customer

- Command the system to upload a copy of its resident program to the office
- Read: arming status, AC power status, list of faulted zones, list of bypassed zones, 512 event log, list of zones currently in alarm, list of zones currently in trouble, and ECP equipment list
- Set the real-time clock

Access Security

Accessing the control from a remote location is protected against compromise by the use of 4 levels of protection:

1. Security code handshake: The subscriber's account number as well as an 8-digit ID number (known only to the office) must be matched between the control and computer.
2. Hang-up and Call-back: The control panel will "hang up" and call the computer back at the pre-programmed number only if the security codes match.
3. Data encryption: All data that is exchanged between the computer and control is encrypted to reduce the possibility of anyone "tapping" the line and corrupting data.
4. Operator access levels: Operators may be assigned various levels of access to the downloader, each having its own log-on code. The access levels allow the operators read/write capabilities of the customers' account information. For a detailed explanation of the access levels, see the downloading software User Manual.

NOTES:

- Each time the control panel is accessed successfully, a Callback Requested report is sent to the central station, if Opening reports are programmed.
- When downloading, the keypad displays "MODEM COMM."
- After each download or a save, an automatic time stamp is done, indicating the date and time of the last download (or save) and the operator ID number.
- A complete hard copy of each individual account can be obtained by connecting a printer to the computer. Refer to your computer Owner's Manual or contact your dealer for printer recommendations.

Connecting a 4100SM Module for Direct Wire Downloading

The VISTA-128FB can be downloaded without using a modem or telephone line, but by using a 4100SM Serial Module and Compass Downloading Software. The direct-wire downloading connection is to be temporary, and is not part of the permanent installation. Direct-wire downloading is meant as a tool for the installer during the installation process.

The connections between the control and the 4100SM are different than those shown in the 4100SM Installation Instructions. See the diagram below for correct connections. In addition, the green wire is referred to in step 2 of the "IN CASE OF DIFFICULTY" section of the 4100SM Instructions, **use the violet wire instead.**

Connector J2 on the main PC board (see the *Summary of Connections* diagram on the inside back cover of this manual), is intended to be interfaced to either a local serial printer (see *Event Log printer Connections* in the *Event Log Options* section) or a computer. Make connections to a computer as shown below. **Note that the violet wire connection for a computer differs from that used when connecting a serial printer.**

Remove the alphanumeric pager interface if it is installed while performing the direct-wire download. It may be reconnected once the direct-wire download is completed.

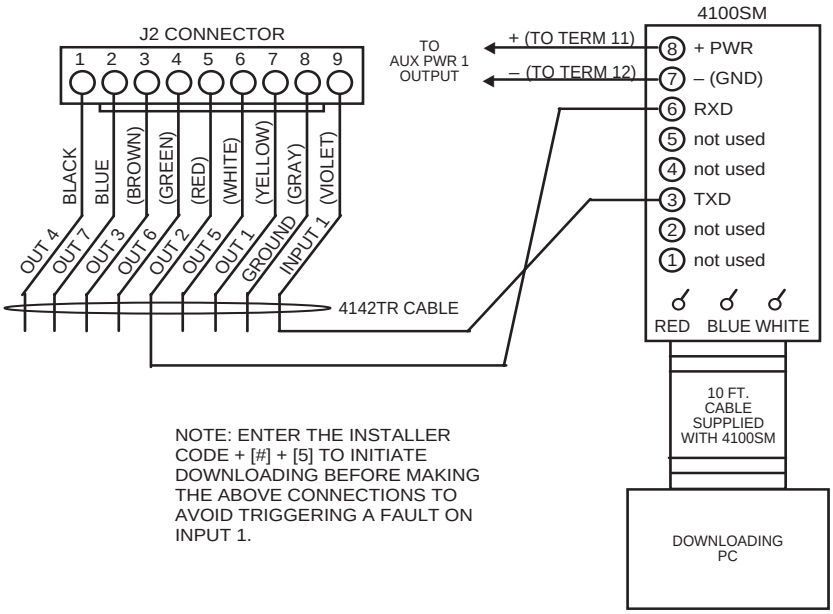

Figure 27-1. Direct Wire Downloading Connections

Setting the Real-Time Clock

In This Section

- *General Information*
- *Setting the Time and Date*

General Information

This system provides a real-time clock, which must be set in order for the system's event log to keep track of events by time and date. It must also be set in order to execute scheduling programs (time-driven events).

Use a 6139 alpha keypad to set the real-time clock, or set the clock via the downloader software. Only users with Installer or Master authority level can set the real-time clock.

Setting the Time and Date

1. Enter installer or Master Code + **# 63**. Typical display shows:

TIME/DATE	—	THU
12:01 AM		01/01/90

2. The day of the week is automatically calculated based on the date entered. Time and date entries are made by simply entering the appropriate hour, minute, month, day and year.
   - Press [∗] to accept the entered value. The cursor then moves to the right.
   - Press [#] to move the cursor to the left of the display, to the previous position.
   - Enter the correct hour. Then press [∗] to move to the “minutes” field and make the correct entry.
   - Press [∗] again, then press any key 0-9 to set AM/PM. Press any key again to change AM to PM, or PM to AM.
   - Press [∗] to move cursor to the “month” field position and enter the correct month using a 2-digit entry.
   - Press [∗] and enter the correct date.
   - Press [∗] and enter the correct year.
3. Exit Clock Mode by pressing [∗] after the cursor is in the year position.

User Access Codes

In This Section

- *General Information*
- *User Codes & Levels of Authority*
- *To Add a Master, Manager, or Operator Code*
- *To Change a Master, Manager, or Operator Code*
- *To Add an RF Key to an Existing User*
- *To Delete a Master, Manager, or Operator Code*
- *To Exit the User Edit Mode*

General Information

This system allows a total of 150 security access codes to be allocated, each identified by a user ID number. **Regardless of the number of partitions each code has access to, it occupies only one user slot in the system. If a particular code is not used in all partitions, that user ID number cannot be used again.**

The Quick Arm feature can also be programmed (partition-specific program field *29), which allows the [#] key to be pressed instead of entering the security code when arming the system. The security code must always be entered to disarm the system.

A user code other than the installer code must be programmed for the Quick Arm feature to function.

User Codes & Levels of Authority

Each user of the system can be assigned a level of authority, which tells the system what system functions that user is authorized to do. A user can have different levels of authority within different partitions. In general, users can perform most system functions, including Test and Chime Modes, but certain authority levels restrict disarming, bypassing or the assigning of other user codes. These restrictions are noted in the descriptions below.

Use the "View Capabilities" keypad function to view the partitions and authority levels for which a particular user is authorized. These levels are described in the table below in order from highest to lowest ranking.

Auth	Title
0	Installer
1	Master
2	Manager
3	Operator level A
4	Operator level B
5	Operator level C
6	Duress

Level 0: Installer (User 1) Codes

- Programmed in field *00 (default = 5-1-4-0). Installer Open/Close reporting is selected in field *39.
- Can perform all system functions (arm, disarm, bypass, etc.), but **cannot disarm** if armed by another code (or by Quick Arm).
- Can add, delete, or change codes of all other authority levels, and can select Open/Close reports for any user.
- Is the only code that can be used to enter program mode. The Installer Code can be prevented from re-entering the Program Mode by exiting using *98. The only way to access Programming Mode if this done is by powering down the system, powering up again, and then pressing both the [*] and [#] keys at the same time within 30 seconds of power up.)
- Must program at least one Master Code during initial installation. Master Codes are codes intended for use by the primary user(s) of the system.

Level 1: Master Codes

- Can perform all normal system functions.
- Can be used to assign up to 141 lower-level codes, which can be used by other users of the system.
- Cannot assign anybody a level of 0 or 1.
- May change his own code.
- Can add, delete, or change Manager or Operator Codes. Each user's code can be individually eliminated or changed at any time.
- Open/Close reporting of added users are is the **same** as that of the Master who is adding the new user.

Level 2: Manager Codes

- Can perform all system functions (arm, disarm, bypass, etc.) programmed by Master.
- May add, delete or change other users of the system below this level (Manager cannot assign anybody a level of 0, 1, or 2).
- May change his own code.
- Open/Close reporting of added users are is the **same** as that of the Manager who is adding the new user.

Levels 3-5: Operator Codes

- Can arm and disarm the system to the authority assigned, but cannot add or modify any user code.
- May operate a partition with one of the three Operator authority levels A through C in the table that follows.

Level	Title	Functions Permitted
3	Operator A	Arm, Disarm, Bypass
4	Operator B	Arm, Disarm
5	Operator C	Arm, Disarm only if armed with same code

- Operator C (sometimes known as the Babysitter Code) cannot disarm the system **unless** the system was armed with that code. This code is usually assigned to persons who may have the need to arm and disarm the system at specific times only (e.g., a babysitter needs to control the system only when babysitting).

Level 6: Duress Codes

- Sends a silent alarm to a central monitoring station if the user is being forced to disarm (or arm) the system under threat (only useful if the system is connected to a central station).
- When the system's Auxiliary Voltage Triggers are connected to another communication's media (Derived Channel/Long Range Radio), note that duress is signaled on the same trigger that signals silent panic (whereas duress has its own unique report when digitally communicated).
- Assigned on a partition-by-partition basis, and can be any code or codes desired.
- Will disarm (or arm) the system, but will also send a silent alarm to the central station (if service is connected). There will be no indication at the keypad that an alarm was sent.

Duress Reporting Note: A non-zero report code for zone 992 (duress) must be programmed, and partition-specific field *85 duress location enabled, to enable Duress reporting.

- The Duress report-triggering logic activates on the 5th key depression (such as OFF), not the 4th key depression (last digit of code). Duress reports will not be triggered if the 5th key is a [*], such as when performing a GOTO or viewing the capabilities of a user.

General Rules on Authority Levels and Changes

The following rules apply to users when making modifications within the system based on the user code authority levels:

- Master Codes and all lower-level codes can be used interchangeably when performing system functions within a partition (a system armed with a user's temporary code can be disarmed with the Master Code or another user's temporary code), except the Operator Level C Code described above.
- A user may not delete or change the user code of the SAME or HIGHER authority than that which he is assigned.
- A user (levels 0, 1 & 2 only) may only ADD users to a LOWER authority level.
- A user may assign other users access to only those partitions to which he himself has access.
- A user code can only be DELETED or CHANGED from within the partition it was created in.
- User numbers must be entered in 3 digits. Single-digit user numbers must, therefore, always be preceded by a "00" (e.g., 003, 004, 005, etc.). Make sure the end user understands this requirement. Temporary codes are entered as 4-digit numbers.

Open/Close Reporting Note: When adding a user, the system will only prompt for Open/Close reporting capability if the user is being added by the Installer. When a Master or Manager adds a new user, the new user's Open/Close reporting enable will be the same as that of the Master or Manager who is adding the user. If Open/Close reports are required to be selectable by the Master or Manager, the Installer should assign two Master or Manager user codes: one with Open/Close reporting enabled, and one without.

Note that Open/Close reporting of Quick Arm is enabled if User 002 is enabled for Open/Close reporting, and that Quick Arm reports as User 000. In order for Quick Arm reports to be sent for all partitions, User #002 must have authority and Open/Close must be enabled for all partitions. If a code with access to all partitions is not desired, it is suggested that user #002 be assigned authority level 5 in all partitions, and that the code be kept secret. Authority level 5 cannot disarm the system unless armed by that user.

ADEMCO Contact ID format is capable of reporting Users 001-150 uniquely. If any other report format is used, only user numbers 001 - 015 can uniquely report to the central station. Users 016 - 150 will report as User 015.

Multiple Partition Access Examples

Each user is programmed for a primary (home) partition. A user can also be given access to operate one or more additional partitions. Within each partition, each user may be programmed to have different levels of authority. For example, User #3, the VP of Engineering, could be assigned to work within the Engineering Department (Partition 1) of ABC Manufacturing. Since he needs the full capabilities in his area, he is assigned as a MASTER with Level 1 authority. This means he may arm, disarm, bypass, add or modify users in Partition 1.

He must also be able to gain access to the manufacturing area (Partition 2) on an emergency basis. You can set this up easily with the partitioned system by requesting that he also be assigned to Partition 2, with a level of authority set lower, such as Level 4 (OPERATOR Level B), which allows him to arm and disarm, but nothing else. The control will automatically assign him the same user number within Partition 2, and does not require reprogramming of his already-existing 4-digit security code.

EXAMPLE OF MULTIPLE PARTITION ACCESS

Part 1	Part 2	Part 3	Part 4	Part 5	Part 6	Part 7	Part 8
User 3	User 3						
Level 1	Level 4						
Master	Oper B						

In the above example, User 3 has MASTER authority in Partition 1 and OPERATOR B authority in Partition 2. His user number is the same for both partitions. Note that if a user number is already being used in a partition, the system will automatically assign a new user an unused number. Also notice that no access is allowed for this user into Partitions 3 - 8. Attempts to access these partitions would be denied automatically.

To ADD a Master, Manager, or Operator Code

During user code entry, normal key depressions at other keypads in a partition will be ignored. However, panic key depression will cause an alarm and terminate user entry.

Enter **[Installer Code]†+ 8 + [new user # (002-150)] + [new user's code]**

† Or Master or Manager Code, but must be code with higher level of authority than the code being changed (i.e., Master Code can add a Manager or Operator-level Code, but cannot add another Master Code; a Manager Code can add an Operator-level Code, but cannot add a Master or another Manager Code).

Keypad will prompt for the authority level for this user.

User Number = 003 Enter Auth. Level

Enter the level number as follows:

1 = Master (arm, disarm, bypass, add or modify lower-level users)

2 = Manager (arm, disarm, bypass, add or modify lower level users)

3 = Operator Level A (arm, disarm, bypass)

4 = Operator Level B (arm, disarm)

5 = Operator Level C (arm, disarm only if system armed with this code)

6 = Duress (arm, disarm, trigger silent panic alarm)

Keypad will then prompt for Open/Close reporting option for this user.

Open/Close Rep.? 0 = NO , 1 = YES

Press **0** (NO) or **1** (YES), depending on whether or not arming/disarming by this user will trigger Opening and Closing reports. This prompt appears only if the Installer Code is used to add a user.

Access Group? Enter 0-8

If access schedules have been programmed, this prompt appears. Enter the user's access group number (1-8) if this user should have limited access to the system. Enter **0** if no access group should be assigned.

RF Button ? 0=NO , 1=YES

If a 5800 Series button transmitter has been enabled for arming/disarming functions, and is not assigned to a user, this prompt will appear. Press **0** (NO) or **1** (YES).

Enter Button ZN # (001-087)

If “yes” was given as the answer to the RF button question, the zone number for the button will be requested. Enter any one of the zone numbers assigned to the button transmitter as AWAY, STAY or DISARM. The system will then assign **all** buttons of the transmitter to this user number.

Multi-Access ? 0 = NO , 1 = YES

Press 0 (NO) if the user is to have access to this partition only. Press 1 (YES) if the user is to have access to more than one partition. If NO, the program exits this mode. If YES, the keypad prompts for the Global Arm option for this user.

Global Arm ? 0 = NO , 1 = YES

Press **0** (NO) or **1** (YES), depending on whether this user will be allowed to arm more than one partition via Global Arm prompts (described in the *Keypad Functions* section).

The keypad now prompts for the user’s access to the next partition.

Part. 2 – SHOP ?
0 = NO , 1 = YES

Press **0** (NO) or **1** (YES), depending on whether this user will have access to the displayed partition number. If NO, the keypad displays this prompt for the next partition number in sequence.

If YES, the keypad prompts for the following:

- User's authority level in the displayed partition (see Authority Level prompt above).
- Open/Close option for this user in the displayed partition (see Open/Close prompt above).
- Global Arm option for this user in the displayed partition.

When all partitions have been displayed, the keypad will scroll through all partitions to which access has been assigned, and will display the user number, authority level, open/close and global arm options that were programmed for each partition to which the user was granted access. For example:

Part. 1 A0* WHSE
User 003 Auth=3G.

Note that the "G" following the authority level indicates that the global arm feature is enabled for this user in the displayed partition, and that the period at the end of the second line indicates Open/Close reporting is enabled for this user in the displayed partition. The "✳" indicates the partition from which the user may be changed or deleted.

To CHANGE a Master, Manager, or Operator Code

Enter **[Installer code]* + 8 + [User number (002-150)] + [new user's code]**

* Or Master or Manager code, but must be code with higher level of authority than the code being changed (i. e., Master Code can change a Manager or Operator-level Code, but cannot change another Master Code; a Manager Code can change an Operator-level Code, but cannot change a Master or another Manager Code).

User Number = 003
NEW USER?

The system detects that the user number is already assigned, and will prompt if this is a new user.

Press **0** (NO).

The system will then confirm that the change is allowed based on authorization level.

To Add an RF Key to an Existing User

To add an RF key to an existing user, or to change a user's global arm option, first delete that user's code, then re-add the user code as described in the "To ADD a Master, Manager, or Operator Code" paragraph.

To Delete a Master, Manager, or Operator Code

Enter **[your code]* + 8 + [User number (002-150)] + [your code again]**

* Installer, Master or Manager Code, but must be code with higher level of authority than the code being deleted (i.e. Master Code can delete a Manager or Operator-level Code, but cannot delete another Master Code; a Manager Code can delete an Operator-level Code, but cannot delete a Master or another Manager Code).

OK TO DELETE 003?
0=NO 1=YES

The system will prompt to confirm that you want to delete this user. Press **0** (NO) or **1** (YES).

If “yes”, that user's code will be removed from all partitions to which it was assigned, and all authorization levels and other information about that user will be deleted. Note that a user can only be deleted by a user with a higher authority level. A user cannot delete himself.

A user code can only be deleted from the partition through which it was entered. If trying to delete from another partition, the message "User [XXX] Not Deleted" will be displayed.

To EXIT the User Edit Mode

Press either [✳] or [#], or don't press any key for 10 seconds.

Keypad Functions

In This Section

- *General Information*
- *Arming Functions*
- *Global Arming*
- *Access Control*
- *Delaying Closing Time*
- *Partition "Go To" Command*
- *Viewing Capabilities of a User*
- *Viewing Zone Descriptors*
- *Viewing Downloaded Messages*
- *Using the Built-in User's Guide*
- *Panic Keys*
- *Speed Key [D] (Macros)*
- *Manual Relay Activation Mode (#70 Mode)*

General Information

The keypad allows the user to arm and disarm the system, and perform other system functions, such as bypassing zones, viewing messages from the central station, and displaying zone descriptors. Zone and system conditions (alarm, trouble, bypass) are shown in the display window.

When an alarm occurs, keypad sounding and external sounding will occur, and the zone(s) in alarm will be displayed on the keypad. Pressing any key will silence the keypad sounder for 10 seconds. Disarming the system will silence both keypad and external sounders. When the system is disarmed, the system's memory of alarm causes any zones that were in an alarm condition during the armed period to be displayed. To clear this display, simply repeat the disarm sequence (enter the security code and press the OFF key).

The keypads also feature chime annunciation, and 3 panic keys (for silent, audible, fire or personal emergency alarms) which can notify the central station of an alarm condition, if that service is connected.

Arming Functions

The following is a brief list of system commands. For detailed information concerning system functions, refer to the User's Manual.

Display Faulted Zones	Before arming, the system must be in the READY condition (all zones must be intact). If the "NOT READY" message appears, press the READY * key to display faulted zones.
Arming Away	Enter code + 2 (AWAY)
Arming Stay	Enter code + 3 (STAY) (all zones designated as zone types 4 and 10 will be automatically bypassed).
Arming Instant	Enter code + 7 (INSTANT) (same as STAY without entry delay).
Arming Maximum	Enter code + 4 (MAXIMUM) (same as AWAY without entry delay).

Disarming	Enter code + 1 (OFF).
Bypassing Zones	Enter code + 6 (BYPASS) + 3-digit zone number. To automatically bypass all faulted zones, use "Quick Bypass" method: Enter code + BYPASS + #.
Chime Mode	Enter code + 9 (CHIME). To turn Chime Mode off, enter code + CHIME again.
Quick Arming	Note that if QUICK ARM is enabled (field *29), the # key can be pressed instead of entering the security code, for any of the arming procedures (Away, Stay, Instant, Maximum, etc.).

A user code other than the Installer Code must be programmed into the system in order for the Quick Arm feature to work.

SUMMARY OF ARMING MODES

Mode	**Features for Each Arming Mode**			
	Exit Delay	Entry Delay	Perimeter Armed	Interior Armed
AWAY	Yes	Yes	Yes	Yes
STAY	Yes	Yes	Yes	No
INSTANT	Yes	No	Yes	No
MAXIMUM	Yes	No	Yes	Yes

Global Arming

If enabled for the user, the keypad will display the following:

```
ARM ALL     ?
0 = NO , 1 = YES
```

If NO, the keypad prompts for arming each partition individually. If YES, the system attempts to arm all partitions allowed by this user. If there are any faults (open doors, windows, etc.) the keypad will display them. See notes below. These faults must be corrected or the zone bypassed before arming will occur. When faults are corrected, repeat the arming procedure.

Notes:

- When using the Global Arm feature, if there are faults in any of the selected partitions, the system will enter a Summary Mode in which the faulted zones of all of the selected partitions will be displayed. These faults must be corrected or bypassed (code + BYPASS + [#] will attempt to bypass the faults in all of the selected partitions). This Summary Mode will end in approximately 120 seconds if no keys are pressed.
- If, when disarming the system using a Global Disarm, any of the selected partitions has a condition which would cause the keypad to beep (such as alarm memory or a trouble condition), the system enter a Summary Mode in which the alarm memory or trouble conditions of all of the selected partitions will be displayed. This mode will continue until either approximately 120 seconds elapses or a second disarm occurs which clears the beeping.

Access Control

The system has the capability to utilize access control by one of 3 methods.

1. One relay may be used for access control in each partition. The relay is programmed in data field 1*76. To activate this relay, the user enters his User Code + [0]. The relay will pulse for 2 seconds.
2. For a more powerful method of access control, program input devices (keypads, RF buttons, hardwired) and access points (using VistaKey or PassPoint ACS) (see the *Access Control* section). Up to 32 access point devices (relays) among 8 partitions can be controlled. For example, if a keypad is programmed as an access input device, then entering **[User Code] + [#73]** or **[User Code] + [#74]** will activate the appropriate access point relays (see also *Zone Programming* and *Output Programming* in the *#93 Menu Mode* section of the *Programming Guide*).
3. If a Vista Gateway Module along with the ADEMCO PassPoint Access Control System or a VistaKey module is installed, then these same inputs will automatically control the appropriate access points. Entering **[User Code]** + **[#75]** will control the state (protect, bypass, lock) of a door. (see the *Access Control* section).
4. If a VistaKey module is installed, entering **[User Code] + [#77]** enables the user to instantly perform an access control function. See the *VistaKey-SK Installation and Setup Guide* for a detailed explanation of these functions.

Delaying Closing Time

If open/close schedules are used, end users can manually delay closing time by extending the closing window by 1 or 2 hours. This is useful if a user must stay on the premises later than usual. The user must have an authority level of Manager or higher.

To extend the closing window, enter **[User code] + [#] +82**.

Closing Delay ?
Hit 0-2 Hours

Enter the number hours, **1** or **2**, by which the end of the closing window should be extended. Note that the delay is from the scheduled closing time, not from the current time.

Press [*] to accept entry and exit this mode. Press [#] to exit this mode without changes.

The system will send an Access Schedule Change report to the central station when the closing window is extended (if programmed).

An extension of the closing window cannot be reduced once it is set. However, a 1-hour delay can be increased to 2 hours. This is to prevent the user from deleting the delay after the normal window expires, thereby missing the end of the window.

Partition "GOTO" Commands

Each keypad is assigned a default partition for display purposes, and will show only that partition's information. To see information for another partition, or perform system functions in another partition, use the GOTO command (**[User Code] + [*] +partition number 0-8**). The keypad will remain in the new partition until directed to go to another partition, or until 120 seconds has elapsed with no keypad activity. To return to your home partition, enter **[*] + Partition number 0**.

You must program data field 2*18 to enable the GOTO function. This is a partition-specific field that must be set for each partition the user wants to access from another partition's keypad.

Viewing Capabilities of a User

The keypad will display the partitions that a user is authorized for, the user number, and the authority level for all partitions authorized. Enter **[User Code] + [*] + [*]**. The user's capabilities in each authorized partition will typically be displayed as follows:

```
Part. 1  A0* WHSE
User 01 Auth.=1G.
```

The user's Open/Close report capability is shown by the dot following the authority level. If Open/Close is not enabled for a user, the dot will not appear.

Viewing Zone Descriptors

The Alpha Keypads can display all programmed descriptors, which is useful to the installer when checking entries, and can be helpful to the user when there is a need to identify zones. ***To display descriptors, the system must be disarmed and ready to arm.*** Press and hold the READY key until the built-in instructions for that key appear, then release the key. The zone descriptors will appear one at a time, for about 2-3 seconds each. For faster viewing, press the READY key to display the next descriptor in numerical order, and so on. When all descriptors have been displayed, the control will exit Display Mode. Enter the Security Code and press the OFF key to exit Display Mode before all descriptors have been displayed.

Viewing Downloaded Messages

Users may occasionally receive a message from their installation company displayed on an alpha keypad. When this occurs, the keypad will display "Message. Press 0 for 5 secs." Instruct the user to press and hold the 0 key to display the central station's message. Note that the system must be in the READY state to view these messages.

Using the Built-in User's Manual

An abbreviated User's Manual is stored in the system's memory, and can be particularly useful to the end user if the printed User's Manual is not conveniently accessible when the user needs to perform a seldom-used and unfamiliar system procedure. The Built-in User's Guide is displayed by simply pressing any of the function keys (e.g., OFF, AWAY, STAY, MAXIMUM, BYPASS, INSTANT, CODE, TEST, READY, #, and CHIME) for approximately 5 seconds and then releasing it. Abbreviated instructions relative to the key that has been pressed will then be displayed (2 lines of text are displayed at a time). This function operates in either the armed or the disarmed state.

Panic Keys

There are three panic key pairs (shown below) that, if programmed, can be used to manually initiate alarms and send a report to the central station. Each key pair can be individually programmed for 24 Hour Silent, Audible or Auxiliary (Emergency) responses, as well as Fire. The panic function is activated when the appropriate key pair is pressed at the same time.

The panic functions are identified by the system as follows:

PANIC	Displayed as Zone
* + 1	995
# + 3	996
* + #	999

For alpha keypads, these panic keys can also be programmed with an alpha descriptor.

For the panic functions to be of practical value, the system must be connected to a central station.

Speed Key [D] (Macros)

The system supports up to 32 Speed Key (macro) commands. A Speed Key command is a series of keystrokes stored in the system memory and activated when a programmed lettered key is pressed. Each Speed Key command can include 32 keystrokes. Typical Speed Key functions include:

- Arming sequences that involve first bypassing certain zones before arming.
- Seldom-used but repeatable sequences.
- Relay activation sequences.

Lettered keys A-B-C can be assigned a specific Speed Key function by entering a Speed Key number (1-32) in field 1*26.

Programming Speed Key Sequence

To program a macro, enter your **[User Code] + [#] + [D]**. The following appears:

```
ENTER SPEED KEY #
01-32          00=QUIT
```

Enter the 2-digit Speed Key number (01-32) being defined and press [*]. Enter up to 32 keystrokes. A Speed Key sequence can include different commands. Press the "D" key to separate different commands.

For example, you may want to perform the following sequence:

Desired function	**Keystrokes**
GOTO partition 2	Enter *2
Bypass Zones 10 & 11	Press bypass [6], then the zone numbers 010 & 011
Arm in Maximum Mode	Press maximum [4] key
Return to Partition 1	Enter *1

To program that Speed Key sequence, type the following :

*2 [D] 6010011 [D] 4 [D] ✻1 [D] [D]

The "D" key is pressed after each command. Press "D" twice to complete the entry and exit.

When defining Speed Key sequences, do not use the [#] key to represent Quick Arming. The system uses the code entered in response to the prompt to initiate commands in a Speed Key sequence, so the quick arm key is unnecessary. The system interprets the use of the [#] key in a Speed Key sequence as its designated function only (e.g. #2 is not interpreted as "Arm-AWAY," but rather as "Enter House ID Sniffer Mode").

Executing Speed Key Sequence

To execute a Speed Key sequence, do the following:

If a lettered key, A-B-C, has been assigned as a Speed Key, press the appropriate key. If a user code is required for any part of the Speed Key sequence, the following prompt appears. Otherwise, the Speed Key sequence automatically begins.

```
ENTER USER CODE
          ✻✻✻✻
```

Enter your user code. The programmed Speed Key sequence will begin automatically.

To activate a Speed Key not assigned to the A-B-C keys, press and hold down the [D] key for 2 seconds until the following prompt appears:

```
ENTER SPEED KEY #
01-32          00=QUIT
```

Enter the desired Speed Key number.

If a user code is required for any part of the Speed Key sequence, the following prompt appears. Otherwise, the Speed Key sequence automatically begins.

```
ENTER USER CODE
              ✳✳✳✳
```

Enter your user code. The programmed Speed Key sequence will begin automatically.

The system will apply the user code's Global Arming capabilities if the macro executes any arming or disarming commands.

Manual Relay Activation Mode (#70 Mode)

The system allows users to manually activate relays by keypad command using either the keypad or a telephone keypad (if VIP Module is used). The user will be prompted (either by keypad alpha display or telephone voice module).

To activate relays from a keypad, enter 4-digit **[Security Code] + [#] +70.**

To activate relays using a telephone and VIP Module, first dial the 2-digit phone access code. When the system acknowledges the access, enter 4-digit **[Security Code] + [#] + 70**. The following prompts/voice responses will begin.

```
ENTER DEVICE NO.
00=QUIT          01
```

Voice: "ENTER DEVICE CODE NOW"

Enter the 2-digit number of the relay to be activated.

```
nn  DEVICE IS OFF
HIT  0=OFF , 1=ON
```

Voice: "'*VOICE DESCRIPTOR*' DEVICE 'NN' ON/OFF. FOR '*VOICE DESCRIPTOR*' ON, ENTER 1; FOR '*VOICE DESCRIPTOR*' OFF ENTER 0"

Press **0** or **1** to turn the device off or on respectively.

'NN' represents the 2-digit relay number and '*VOICE DESCRIPTOR*' is the relay voice descriptor programmed by the installer (see *Relay Voice Descriptors* in the *#93 Menu Mode* of the *Programming Guide*).

nn DEVICE IS OFF HIT THE "*" KEY	**Voice:** "'*VOICE DESCRIPTOR*' DEVICE 'NN' ON/OFF. TO EXIT, ENTER 00 NOW"

From a keypad, press [*] to continue. The ENTER DEVICE NO. prompt will appear.

From a telephone keypad, enter **00** to exit, or enter the next relay number to be programmed. The current on/off state of that relay will be annunciated as described above. Alternatively, if 6 seconds elapses with no key depression, the voice module will annunciate the "ENTER DEVICE CODE NOW" message.

A relay that has been designated as a fire relay is automatically restricted to prevent inadvertent activation/deactivation by users. Only the Installer Code can override this restriction. If the installer attempts to access a fire relay, the message "RESTRICTED USE OVERRIDE" will be displayed. The relay can then be tested for manual operation.

Testing The System

In This Section

- *Battery Test*
- *Dialer Test*
- *Fire Drill Test*
- *One-Man Fire Walk-Test*
- *Burglary Walk-Test*
- *Armed Burglary System Test*
- *Trouble Conditions*
- *Turning the System Over to the User*
- *To the Installer*

Battery Test

When AC power is present, the VISTA-128FB runs a brief battery test every 60 seconds to determine if there is a battery connected, and runs an extended battery test every 24 hours to check on the battery's condition. If the VISTA-128FB finds that the battery voltage is low (less than approximately 11.5V) during one of these tests, it initiates a keypad "SYSTEM LOBAT" display and a rapid console beeping sound. It also sends a Low Battery report to the central station (if the dialer feature is used). The console can be cleared by entering any security code + OFF, and a Restore report will be sent to the central station after a subsequent test indicates that the problem (disconnected or low battery) has been corrected.

If used, the PS24 will also run a brief battery test every 60 seconds to check that a battery is connected, and will run an extended battery test every 17 hours to check the actual battery condition. If the PS24 finds the battery voltage low (less than approximately 23V), it will open-circuit its LOW BATTERY output. Be sure to wire this output to one of the VISTA-128FB's EOLR-supervised zones (zones 3-8; program for 24-hour trouble response (zone type 19) so that the VISTA-128FB will initiate the required local annunciation and dialer reports).

Dialer Test

The VISTA-128FB may be programmed to automatically transmit test reports to a central station at intervals ranging from once per hour to once per 999 hours (field *27). UL requires that a test report be transmitted at least once every 24 hours. The system can be programmed as to when the first report is sent after power-up (field *83).

Fire Drill Test (code + [#] + 69)

This test causes fire bells (or any bell having a non-zero response type in the *#93 Menu Mode*) to be activated (in either steady or pulsing manner, as programmed in field 3*15) for the purpose of conducting a fire drill or a bell test. This test can only be activated by the installer or a master user from Partition 1 keypads by entering the corresponding security code and pressing [#] + 69 while the burglary portion of the system is disarmed. Keypads display "FIRE DRILL ACTIVE" while this test is active. The test is stopped by entering any security code and pressing OFF. Note that the system continues to monitor all 24-hour zones (fire, panic, etc.) while this test is active, and will end the test when an alarm condition is detected. This test should be conducted at periodic intervals, as determined by the local authority having jurisdiction.

One-Man Fire Walk-Test (code + [#] + 68)

This test causes the system to sound console beeps and bell dings in response to fire zone faults (zone type 9, 16 & 17) for the purpose of allowing proper zone operation to be checked without triggering alarms. Note that the system will not be operational as an alarm system (i.e., cannot sense alarms) while this test is active. The test can only be activated by the installer by entering the Installer's Code and pressing [#] + 68 while the burglary portion of the system is disarmed. This test should be conducted at periodic intervals, as determined by the local authority having jurisdiction.

When testing non-latching devices, such as heat detectors, be sure to keep the device faulted until the system responds with the keypad beep or siren sound. If the device is faulted only momentarily, the system may not respond to the fault.

When this test is first activated, the system will display:

USE BELL DING? 0 = NO 1 = YES

Enter **1** (YES) to have the fire bells associated with each point sound for 3 seconds when a point is faulted.

Enter **0** (NO) if only keypad sounders are desired.

The next prompt will be displayed.

AUTO-TEST DET? 0 = NO 1 = YES

Enter **1** (YES) to have the system automatically test all polling loop points with a fire response type 9 or 16. Other fire zones will have to be tested manually.

Enter **0** (NO) to test every point manually.

The next prompt will be displayed.

For true detector sensitivity tests, and for compliance with fire codes, you must enter 0 (NO) to this question.

LOG RESULTS? 0 = NO 1 = YES

Enter **1 (YES)** to have the system log each point as it is tested. A list of untested points will also be logged.

Enter **0 (NO)** if you do not want to log the results.

The next prompt will only be displayed if Contact ID report format has been selected.

C.S. TRANSMIT? 0 = NO 1 = YES

Enter **1 (YES)** to have the results of the test sent to the central station. This report will consist of a list of points that have been tested followed by a list of points that have not been tested.

Enter **0 (NO)** if you do not want to report the results. A Walk-Test Start and Walk-Test End report will be sent in either case (if programmed).

When the Test Mode is activated, the system will sound fire bells (or any bell having a non-zero response type programmed in the *#93 Menu Mode*) for 3 seconds. The system will also send a Start of Walk-Test message to the central station, and will light all keypad indicators (except the ARMED LED) and display window segments to verify that they are working properly. The keypads will then display Fire Walk-Test in Progress and will sound a single beep every 15 seconds while this test is active.

The system will build a list of all the fire zones (response types 9, 16, 17, 18) that need to be tested. These points will be scrolled on the display. For each point, the keypad will display "UNTST XXX," where XXX is the point number, followed by an alpha descriptor for the point.

If the auto-test option has been selected, the control panel will attempt to automatically test all of the polling loop points that have a zone response type of 9 or 16. For points that must be manually tested, fault and reset each fire alarm sensor in turn. Each action should cause keypads to beep and fire bells to ding. The keypads will display the zone number and the associated alpha descriptor while the zone remains faulted. The system automatically issues a smoke detector power reset about 10 seconds after it finds a fault on one of these zones, to allow faulted detectors to be reset.

The system will automatically perform the smoke detector reset on zones 1 & 2, if programmed for fire, and on the auxiliary relay and any other output device (relay) that is programmed for smoke detector reset.

To end the test, enter any security code and press OFF. An End of Walk-Test message will be sent to the central station (if programmed). Note that the test will automatically end if no faults are detected within a 60-minute time period.

Burglary Walk-Test (Code + TEST [5])

This test causes the system to sound keypad beeps in response to faults on burglary and non-fire related 24-hour zones for the purpose of allowing proper zone operation to be checked without triggering alarms. Note that the system will not trigger alarms for burglary and non-fire related 24-hour zones, but will trigger fire alarms while this test is active. This test can only be activated by the installer, a master user or manager user by entering the corresponding security code and pressing TEST while the burglary portion of the system is disarmed. UL requires that this test be conducted on a weekly basis.

When this test is first activated, the system will sound burglary bells (or any bell having a non-zero response type in each bell's supervisory zone) for 3 seconds. The system will send a Start of Walk-Test message to the central station. The keypads will display Burg Walk-Test in Progress and will sound a single beep every 15 seconds while the test remains active.

Open and close each protected door and window in turn. Each action should produce 3 beeps from the keypad. Walk in front of any motion detectors. Listen for three beeps when the detector senses movement. The keypad will display the zone number and alpha descriptor while a door or window remains open or while a detector remains activated. The system automatically issues a Zone 8 Glassbreak Detector Power Reset about 10 seconds after it finds a fault on this zone, to allow faulted detectors to be reset.

To end this test, enter any security code and press OFF. An End-of-Walk-Test message will be sent to the central station.

All partitions containing wireless transmitters must be placed in the test mode for sensitivity reduction of the RF receiver (50% sensitivity). Otherwise, the RF receiver remains at full strength.

Armed Burglary System Test

1. Alarm messages will be sent to the central station during the following tests. Notify the central station that a test will be in progress.
2. A display of "COMM. FAILURE" indicates a failure to communicate (no kissoff by the receiver at the central station after the maximum number of transmission attempts is tried). If this occurs, verify that the phone line is connected, the correct report format is programmed, etc.

1. Arm the system and fault one or more zones. Silence alarm sounder(s) each time by entering the code and pressing OFF. Check that entry/exit delay zones provide the assigned delay times.
2. Check the keypad-initiated alarms, if programmed, by pressing the panic keys (* and #, 1 and *, and/or 3 and #). If the system has been programmed for audible emergency, the keypad will emit a loud, steady alarm sound. The word “ALARM” and a descriptor "999" will be displayed for * and #. (If 1 and * are pressed, a "995" will be displayed; if 3 and # are pressed, a "996" will be displayed.) Silence the alarm by entering the security code and pressing OFF. If the system has been programmed for silent panic, there will be no audible alarms or displays. A report will be sent to the central station, however.
3. Notify the central station that all tests are finished, and verify results with them.

Trouble Conditions

Supervisory Messages

- A display of “SUPV” accompanied by a zone number (001-128) and an alpha descriptor (if programmed) indicates that a fire supervisory condition exists on that zone. This means that the operation of the fire alarm system may be compromised.

Check or Trouble Messages

- A display of "CHECK" or "TRBL" (as per field 3*00) accompanied by a zone number (001-128) and an alpha descriptor indicates that a problem exists with that zone. Zone trouble may be caused by one of the following conditions:
  - A hardwired fire zone is open (broken wire)
  - A Day/Night zone (zone type 5) is faulted
  - A polling loop zone is not seen by the control panel
  - A polling loop zone has been tampered (cover removed on a 4190)
  - A wireless zone has not checked in during the time programmed in field 1*31
  - A 5800 Series transmitter has been tampered (cover removed)
- "CHECK" accompanied by a numeric display of "6XX," where XX = 01-32, indicates a trouble on a 4204CF Supervised Bell Output (corresponding relay number 01-32).
- "CHECK" accompanied by a numeric display of "8XX," where XX = 00-31, indicates a trouble on a peripheral device (connected to the panel's keypad terminals) of the corresponding device address (00-31).
- "CHECK" accompanied by a numeric display of "9XX," where XX = 00-99, indicates that a system trouble exists (dialers, bell outputs, ground fault, etc.). See the *Zone Index/Zone Type Defaults* section.

If the problem has been corrected, key an OFF sequence (Security Code + OFF) twice to clear the display.

Other System Messages

- "COMM. FAILURE" at the keypad indicates that a failure occurred in the telephone communication portion of your system.
- "LO BAT" and a zone descriptor, accompanied by a once-per-minute beep at the keypad, indicates that a low battery condition exists in the wireless transmitter displayed. The audible warning sound may be silenced by pressing any key.
- "SYSTEM LO BAT" at the keypad indicates that a low battery condition exists with the system's backup battery.
- “HSENS” and a zone number indicates a smoke detector with a high sensitivity level, which may cause false alarms. The detector is dirty and should be cleaned or replaced.
- “LSENS” and a zone number indicates a smoke detector with a low sensitivity level. Detectors with a low sensitivity might not detect a smoke condition. The detector should be cleaned or replaced.
- "RCVR SET UP ERROR" at the keypad indicates that the system has more wireless zones programmed than the wireless receiver can support. If this is not corrected, none of the zones in the system will be protected. If additional wireless zones are desired, use an appropriate receiver.
- "MODEM COMM" at the keypad indicates that the control is on-line with a remote computer.

System Off-Normal Report

If programmed, a unique Off-Normal report will be generated instead of the periodic test report if any of the following conditions are present at the time of the report:

- Fire trouble on any zone (zone response types 9, 16, 17, 18)
- Fire supervisory present (zone response type 18)
- Unrestored fire alarm on any zone
- Bypass of any fire zone
- Bell circuit fault for any supervised fire bell
- Bypass/disable of any supervised fire bell
- Telco fault of either dialer line
- Bypass/disable of either dialer
- Earth ground fault present
- Bypass of earth ground supervisory zone
- Fault on LORRA "XMIT OK" signal (if enabled)
- LORRA trigger bypassed
- AC failure
- Low system battery
- Keypad supervision fault

This report will be sent as follows:

Contact ID: Code 608

High Speed: Channel 3 of system report used (channel 9 = 6)

Low Speed: Digits programmed in System Group #4 report codes (*Report Code Programming* in the *#93 Menu Mode* of the *Programming Guide*).

Power Failure

If the POWER indicator is off, and the message "AC LOSS" is displayed, the keypad is operating on battery power only. Check to see that the circuit breaker for the branch circuit that your system's transformer is wired to has not been accidentally turned off. Instruct the user to call a service representative immediately if AC power cannot be restored.

Turning the System Over to the User

- Fully explain the operation of the system to the user by going over each of its functions as well as the User's Manual supplied.
- In particular, explain the operation of each zone (entry/exit, perimeter, interior, fire, etc.). Be sure the user understands how to operate any emergency feature(s) programmed into the system.

To The Installer

Regular maintenance and inspection (at least annually) by the installer and frequent testing by the user are vital to continuous satisfactory operation of any alarm system.

The installer should assume the responsibility of developing and offering a regular maintenance program to the user as well as acquainting the user with the proper operation and limitations of the alarm system and its component parts. Recommendations must be included for a specific program of frequent testing (at least weekly) to ensure the system's proper operation at all times.

Contacting Technical Support

PLEASE, before you call Technical Support, be sure you:

- READ THE INSTRUCTIONS!
- Check all wiring connections.
- Determine that the power supply and/or backup battery are supplying proper voltages.
- Verify your programming information where applicable.
- Be sure all keypads and devices are addressed properly.
- Note the proper model number of this product, and the version level (if known) along with any documentation that came with the product.
- Note your ADEMCO customer number and/or company name.

Having this information handy will make it easier for us to serve you quickly and effectively.

You may contact Technical Support via Toll-Free Fax. Please include your return fax number. You will receive a reply within 24 hours. You may also contact Technical Support via modem to ATLIS-BBS, Tech Support's Electronic Bulletin Board System. Replies are posted within 24 hours.

Technical Support:	1-800-645-7492 (8 a.m.-8 p.m. E.S.T.)
Technical Support Fax Number:	1-800-447-5086
ATLIS-BB Electronic Bulletin Board System:	1-516-496-3980
(1200 - 9600 Baud, 8 Data Bits, 1 Start/Stop Bit, No Parity)	
ATLIS-FAX FAXBACK Automated Fax Retrieval System:.....	1-800-573-0153 or
.....	1-516-921-6704 / ext. 1667
World Wide Web Address:	HTTP://WWW.ADEMCO.COM

Regulatory Agency Statements

UL Installation Requirements

The following requirements apply to both UL residential and UL commercial burglary installations:

1. All partitions must be owned and managed by the same person(s).
2. All partitions must be part of one building at one street address.
3. The audible alarm device(s) must be placed where it/they can be heard by all partitions.
4. The control cabinet must be protected from unauthorized access. This can be done by installing a tamper switch on the cabinet door (supplied with VISTA-128FB) or by installing a UL Listed passive infrared detector positioned to detect cabinet access. Wire the selected device to any EOLR-supervised zone (Zone 1-8). Program this zone for day trouble/night alarm (type 05) or 24-hour audible alarm (type 07) response. The 24-hour alarm response must be used for multiple partitioned systems.
5. Remote downloading and auto-disarming are not UL Listed features.

UL864/NFPA Local Fire

Configure at least one bell output for supervision and wire polarized fire alarm indicators to it. Program this bell for temporal sounding.

UL864/NFPA Central Station and Remote Station Fire

1. Size the backup battery for 24-hour standby (central station) or 60-hour standby (remote station) time.
2. For central station service, you may use the 7720ULF or 7920SE LORRAs alone, the main dialer with a LORRA, or the main dialer with the 5140DLM Backup Dialer Module. For remote station service, you must use the main dialer with the 5140DLM Backup Dialer Module.
3. When using the LORRA, connect its channel inputs to the VISTA-128FB's fire alarm, fire supervisory (if used), and trouble triggers. Also connect its XMIT OKAY output to Input 1 on the VISTA-128FB's J2 header. Program J2 Input 1 system Zone 973 for 24-hour trouble response (type 19) to send radio faults.
4. When the main dialer is used, enable it (field 3*30) and connect it to a telephone line. Assign a 24-hour trouble response (type 19) to system Zone 974 to enable main dialer supervision. The VISTA-128FB will activate the trouble trigger when it detects a main dialer supervision fault.
5. When the backup dialer is used, install it on the VISTA-128FB's PCB shield. Enable it (field 3*30) and connect it to a separate telephone line. Assign a 24-hour trouble response (type 19) to system Zone 975 to enable backup dialer supervision.
6. When the dialer is used, program it to send fire alarm, fire supervisory (if used), trouble, AC loss, low battery, normal dialer test, and off-normal dialer test reports. Field *27 must be set to "024" maximum so that test reports are sent at least once every 24 hours.
7. If a secondary number is programmed, set the maximum number of dialer re-tries to 3, 4, or 5 in field 3*21.

UL609 Grade A Local Mercantile Premises/Local Mercantile Safe & Vault

1. Use the VISTA-128FB.
2. All zones must be configured for EOLR supervision (*41=0). Wireless sensors may not be used. If 4190WH RPMs are used, set field *24 to "0" to enable tamper detection.
3. Attach a door tamper switch (supplied) to the VISTA-128FB cabinet backbox. For safe and vault installations, a shock sensor (not supplied) must also be attached to the backbox. (Also see *Mounting the Cabinet* in the *Installing the Control* section)
4. Wire an ADEMCO AB12 Grade A Bell/Box to the bell output. Bell wires must be run in conduit. Program the bell output for 16 or longer timeout and for confirmation of arming ding. (Also see the *External Sounders* section)
5. Wire the VISTA-128FB tamper switch and AB12 Bell/Box tamper switches to any EOLR supervised zone (zones 1-8). Program this zone for day trouble/night alarm (type 05) or 24-hour audible alarm (type 07) response. The 24-hour alarm response must be used for multiple partitioned systems.
6. Entry delays must not exceed 45 seconds, and exit delays must not exceed 60 seconds.

UL365 Police Station Connected Burglar Alarm

Follow the instructions for UL609 local installations given above.

For Grade A Service:

- You may use the VISTA-128FB dialer alone, or the 7720 Long Range Radio alone.
- When using the dialer, program it to send Burglary Alarm, Low Battery and Communicator Test reports. Field *27 must be set to "024" (or less) so that test reports are sent at least once every 24 hours.
- If using the 7720, connect it to the VISTA-128FB burglary/audible panic alarm trigger.

For Grade AA Service:

- You must use a 7920SE Long Range Radio.
- Connect the 7920SE to the VISTA-128FB burglary/audible panic alarm trigger.

UL611/UL1610 Central Station Burglary Alarm

Follow the instructions for UL609 local installations given above.

For Grade A Service:

- You must use the VISTA-128FB's dialer with a 7720 Long Range Radio.
- Connect the control's burglary/audible panic alarm trigger (on J2 header) to the 7720. Program a 24-hour trouble response for Zone 974 to enable main dialer supervision. The VISTA-128FB will activate the burglary/audible panic trigger when a corresponding alarm is detected, and will activate the trouble trigger when a main dialer fault is detected..
- Also connect the 7720's radio fault output to one of the VISTA-128FB's EOLR-supervised zones (i.e., 1-8). Program this zone for a trouble by day/alarm by night (type 05) or a 24-hour alarm (type 07, 08) response to radio faults.
- Program the control's dialer to send Burglary Alarm, Trouble, Opening/Closing, and Low Battery reports.

For Grade AA Service:

- Follow the instructions for Grade A service, except use the 7920SE in place of the 7720.

California State Fire Marshal (CSFM) Requirements.

24-hour backup: The California State Fire Marshal has published new regulations which require that all residential fire alarm control panels installed after June 30, 1993 must be provided with a backup battery which has sufficient capacity to operate the panel and its attached peripheral devices for 24 hours in the intended standby condition, followed by at least 4 minutes in the intended fire alarm signaling condition. Be sure to size the battery to meet this requirement.

FEDERAL COMMUNICATIONS COMMISSION (FCC) STATEMENT

This equipment has been tested to FCC requirements and has been found acceptable for use. The FCC requires the following statement for your information:

This equipment generates and uses radio frequency energy and if not installed and used properly, that is, in strict accordance with the manufacturer's instructions, may cause interference to radio and television reception. It has been type tested and found to comply with the limits for a Class B computing device in accordance with the specifications in Part 15 of FCC Rules, which are designed to provide reasonable protection against such interference in a residential installation. However, there is no guarantee that interference will not occur in a particular installation. If this equipment does cause interference to radio or television reception, which can be determined by turning the equipment off and on, the user is encouraged to try to correct the interference by one or more of the following measures:

- If using an indoor antenna, have a quality outdoor antenna installed.
- Reorient the receiving antenna until interference is reduced or eliminated.
- Move the receiver away from the control/communicator.
- Move the antenna leads away from any wire runs to the control/communicator.
- Plug the control/communicator into a different outlet so that it and the receiver are on different branch circuits.

If necessary, the user should consult the dealer or an experienced radio/television technician for additional suggestions.

The user or installer may find the following booklet prepared by the Federal Communications Commission helpful:

"Interference Handbook"

This booklet is available from the U.S. Government Printing Office, Washington, DC 20402.

The user shall not make any changes or modifications to the equipment unless authorized by the Installation Instructions or User's Manual. Unauthorized changes or modifications could void the user's authority to operate the equipment.

IN THE EVENT OF TELEPHONE OPERATIONAL PROBLEMS

In the event of telephone operational problems, disconnect the control panel by removing the plug from the RJ31X (CA38A in Canada) wall jack. We recommend that you demonstrate disconnecting the phones on installation of the system. Do not disconnect the phone connection inside the control panel. Doing so will result in the loss of your phone lines. If the regular phone works correctly after the control panel has been disconnected from the phone lines, the control panel has a problem and should be returned for repair. If upon disconnection of the control panel, there is still a problem on the line, notify the telephone company that they have a problem and request prompt repair service. The user may not under any circumstances (in or out of warranty) attempt any service or repairs to the system. It must be returned to the factory or an authorized service agency for all repairs.

FCC PART 68 NOTICE

This equipment complies with Part 68 of the FCC rules. On the front cover of this equipment is a label that contains, among other information, the FCC registration number and ringer equivalence number (REN) for this equipment. If requested, this information must be provided to the telephone company.

This equipment uses the following jacks:

An RJ31X is used to connect this equipment to the telephone network.

The REN is used to determine the quantity of devices which may be connected to the telephone line. Excessive RENs on the telephone line may result in the devices not ringing in response to an incoming call. In most, but not all areas, the sum of the RENs should not exceed five (5.0). To be certain of the number of devices that may be connected to the line, as determined by the total RENs, contact the telephone company to determine the maximum REN for the calling area.

If this equipment causes harm to the telephone network, the telephone company will notify you in advance that temporary discontinuance of service may be required. If advance notice is not practical, the telephone company will notify the customer as soon as possible. Also, you will be advised of your right to file a complaint with the FCC if you believe necessary.

The telephone company may make changes in its facilities, equipment, operations, or procedures that could affect the operation of the equipment. If this happens, the telephone company will provide advance notice in order for you to make the necessary modifications in order to maintain uninterrupted service.

If trouble is experienced with this equipment, please contact the manufacturer for repair and warranty information. If the trouble is causing harm to the telephone network, the telephone company may request you remove the equipment from the network until the problem is resolved.

There are no user serviceable components in this product, and all necessary repairs must be made by the manufacturer. Other repair methods may invalidate the FCC registration on this product.

This equipment cannot be used on telephone company-provided coin service. Connection to Party Line Service is subject to state tariffs.

This equipment is hearing-aid compatible.

When programming or making test calls to an emergency number, briefly explain to the dispatcher the reason for the call. Perform such activities in the off-peak hours; such as early morning or late evening.

CANADIAN DEPARTMENT OF COMMUNICATIONS (DOC) STATEMENT

NOTICE

The Canadian Department of Communications label identifies certified equipment. This certification means that the equipment meets certain telecommunications network protective, operational and safety requirements. The Department does not guarantee the equipment will operate to the user's satisfaction.

Before installing this equipment, users should ensure that it is permissible to be connected to the facilities of the local telecommunications company. The equipment must also be installed using an acceptable method of connection. In some cases, the company's inside wiring associated with a single line individual service may be extended by means of certified connector assembly (telephone extension cord). The customer should be aware that compliance with the above conditions may not prevent degradation of service in some situations.

Repairs to certified equipment should be made by an authorized Canadian maintenance facility designated by the supplier. Any repairs or alterations made by the user to this equipment, or equipment malfunctions, may give the telecommunications company cause to request the user to disconnect the equipment.

Users should ensure for their own protection that the electrical ground connections of the power utility, telephone lines and internal metallic water pipe system, if present, are connected together. This precaution may be particularly important in rural areas.

Caution: User should not attempt to make such connections themselves, but should contact the appropriate electric inspection authority, or electrician, as appropriate.

The Load Number (LN) assigned to each terminal device denotes the percentage of the total load to be connected to a telephone loop which is used by the device, to prevent overloading. The termination on a loop may consist of any combination of devices subject only to the requirement that the total of the Load Numbers of all the devices does not exceed 100.

AVIS

L'étiquette du ministère des Communications du Canada identifie le matériel homologué. Cette étiquette certifie que le matériel est conforme à certaines normes de protection, d'exploitation et de sécurité des réseaux de télécommunications. Le ministère n'assure toutefois pas que le matériel fonctionnera à la satisfaction de l'utilisateur.

Avant d'installer ce matériel, l'utilisateur doit s'assurer qu'il est permis de le raccorder aux installations de l'entreprise locale de télécommunications. Le matériel doit également être installé en suivant une méthode acceptée de raccordement. Dans certains cas, les fils intérieurs de l'entreprise utilisés pour un service individuel à la ligne unique peuvent être prolongés au moyen d'un dispositif homologué de raccordement (cordon prolongateur téléphonique interne). L'abonné ne doit pas oublier qu'il est possible que la conformité aux conditions énoncées ci-dessus n'empèchet pas la dégradation du service dans certaines situations. Actuellement, les entreprises de télécommunications ne permettent pas que l'on raccorde leur matériel aux prises d'abonnés, sauf dans les cas precis prévus par les tarifs particuliers de ces entreprises.

Les réparations du matériel homologué doivent être effectuées pas un centre d'entretien canadien autorisé désigné par le fournisseur. La compagnie de télécommunications peut demander à l'utilisateur de débrancher un appareil à la suite de réparations ou de modifications effectuées par l'utilisateur ou à cause de mauvais fonctionnement.

Pour sa propre protection, l'utilisateur doit s'assurer que tous les fils de mise en terre de la source d'énergie électrique, des lignes téléphoniques de réseau de conduites d'eau s'il y en a, soient raccordés ensemble. Cette précaution est particulièrement importante dans les régions rurales.

Avertissement: L'utilisateur ne doit pas tenter de faire ces raccordements lui-même; il doit avoir recours à un service d'inspection des installations électriques, ou à un électricien, selon le cas.

L'indice de charge (IC) assigné à chaque dispositif terminal pour éviter toute surcharge indique le pourcentage de la charge totale qui peut être raccordé à un circuit téléphonique bouclé utilisé par ce dispositif. La terminaison du circuit bouclé peut être constituée de n'importe quelle combinaison de dispositifs, pourvu que la somme des indices de charge de l'ensemble des dispositifs ne dépasse pas 100.

A P P E N D I X B

DIP Switch Tables

DIP SWITCH TABLES FOR ADDRESSABLE POLLING LOOP DEVICES

4208 ZONE EXPANDER

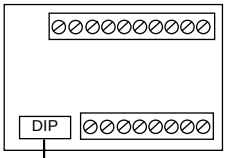

SHOWN SET FOR ID 10 (A)

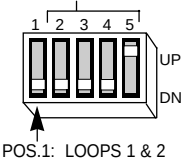

SIDE VIEW (UP)

POS.1: LOOPS 1 & 2 RESPONSE TIME:

W/TABLE	FAST	SLOW
A	UP	DN
B	DN	UP

4192D/4192SDT/4192CP SMOKE DETECTORS

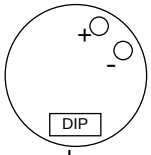

APPLIES TO TABLE A ONLY
SHOWN SET FOR ID 10

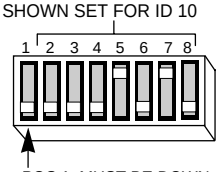

POS.1: MUST BE DOWN

SIDE VIEW (UP)

SIDE VIEW (DN)

4190WH ZONE EXPANDER

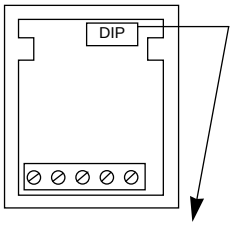

APPLIES TO TABLE A & B ONLY
SHOWN SET FOR ID 10 (A)

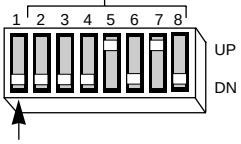

SIDE VIEW (DN)

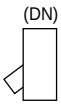

WITH TABLE:	A	B
POS.1 MUST BE:	DN	UP

THIS TABLE FOR DIPS WITH WORD "DN" ("—" = DN) **A**

DEVICE ID	DIP SWITCH POSITION			
	2	3	4	5
10-16	—	—	—	UP
17-24	—	—	UP	—
25-32	—	—	UP	UP
33-40	—	UP	—	—
41-48	—	UP	—	UP
49-56	—	UP	UP	—
57-64	—	UP	UP	UP

THIS TABLE FOR DIPS WITH WORD "UP" ("—" = DN) **B**

DEVICE ID	DIP SWITCH POSITION			
	2	3	4	5
10-16	UP	UP	UP	—
17-24	UP	UP	—	UP
25-32	UP	UP	—	—
33-40	UP	—	UP	UP
41-48	UP	—	UP	—
49-56	UP	—	—	UP
57-64	UP	—	—	—

THIS TABLE FOR DIPS WITH WORD "DN" ("–" = DN) **A**

DEVICE ID	DIP SWITCH POSITION						
	2	3	4	5	6	7	8
10	–	–	–	UP	–	UP	–
11	–	–	–	UP	–	UP	UP
12	–	–	–	UP	UP	–	–
13	–	–	–	UP	UP	–	UP
14	–	–	–	UP	UP	UP	–
15	–	–	–	UP	UP	UP	UP
16	–	–	UP	–	–	–	–
17	–	–	UP	–	–	–	UP
18	–	–	UP	–	–	UP	–
19	–	–	UP	–	–	UP	UP
20	–	–	UP	–	UP	–	–
21	–	–	UP	–	UP	–	UP
22	–	–	UP	–	UP	UP	–
23	–	–	UP	–	UP	UP	UP
24	–	–	UP	UP	–	–	–
25	–	–	UP	UP	–	–	UP
26	–	–	UP	UP	–	UP	–
27	–	–	UP	UP	–	UP	UP
28	–	–	UP	UP	UP	–	–
29	–	–	UP	UP	UP	–	UP
30	–	–	UP	UP	UP	UP	–
31	–	–	UP	UP	UP	UP	UP
32	–	UP	–	–	–	–	–
33	–	UP	–	–	–	–	UP
34	–	UP	–	–	–	UP	–
35	–	UP	–	–	–	UP	UP
36	–	UP	–	–	UP	–	–
37	–	UP	–	–	UP	–	UP
38	–	UP	–	–	UP	UP	–
39	–	UP	–	–	UP	UP	UP
40	–	UP	–	UP	–	–	–
41	–	UP	–	UP	–	–	UP
42	–	UP	–	UP	–	UP	–
43	–	UP	–	UP	–	UP	UP
44	–	UP	–	UP	UP	–	–
45	–	UP	–	UP	UP	–	UP
46	–	UP	–	UP	UP	UP	–
47	–	UP	–	UP	UP	UP	UP
48	–	UP	UP	–	–	–	–
49	–	UP	UP	–	–	–	UP
50	–	UP	UP	–	–	UP	–
51	–	UP	UP	–	–	UP	UP
52	–	UP	UP	–	UP	–	–
53	–	UP	UP	–	UP	–	UP
54	–	UP	UP	–	UP	UP	–
55	–	UP	UP	–	UP	UP	UP
56	–	UP	UP	UP	–	–	–
57	–	UP	UP	UP	–	–	UP
58	–	UP	UP	UP	–	UP	–
59	–	UP	UP	UP	–	UP	UP
60	–	UP	UP	UP	UP	–	–
61	–	UP	UP	UP	UP	–	UP
62	–	UP	UP	UP	UP	UP	–
63	–	UP	UP	UP	UP	UP	UP
64	UP	–	–	–	–	–	–
65	UP	–	–	–	–	–	UP
66	UP	–	–	–	–	UP	–
67	UP	–	–	–	–	UP	UP
68	UP	–	–	–	UP	–	–
69	UP	–	–	–	UP	–	UP
70	UP	–	–	–	UP	UP	–
71	UP	–	–	–	UP	UP	UP
72	UP	–	–	UP	–	–	–
73	UP	–	–	UP	–	–	UP
74	UP	–	–	UP	–	UP	–
75	UP	–	–	UP	–	UP	UP
76	UP	–	–	UP	UP	–	–
77	UP	–	–	UP	UP	–	UP
78	UP	–	–	UP	UP	UP	–
79	UP	–	–	UP	UP	UP	UP
80	UP	–	UP	–	–	–	–
81	UP	–	UP	–	–	–	UP
82	UP	–	UP	–	–	UP	–
83	UP	–	UP	–	–	UP	UP
84	UP	–	UP	–	UP	–	–
85	UP	–	UP	–	UP	–	UP
86	UP	–	UP	–	UP	UP	–
87	UP	–	UP	–	UP	UP	UP
88	UP	–	UP	UP	–	–	–
89	UP	–	UP	UP	–	–	UP
BIT VALUE:	**64**	**32**	**16**	**8**	**4**	**2**	**1**

THIS TABLE FOR DIPS WITH WORD "UP" ("–" = DN) **B**

DEVICE ID	DIP SWITCH POSITION						
	2	3	4	5	6	7	8
10	UP	UP	UP	–	UP	–	UP
11	UP	UP	UP	–	UP	–	–
12	UP	UP	UP	–	–	UP	UP
13	UP	UP	UP	–	–	UP	–
14	UP	UP	UP	–	–	–	UP
15	UP	UP	UP	–	–	–	–
16	UP	UP	–	UP	UP	UP	UP
17	UP	UP	–	UP	UP	UP	–
18	UP	UP	–	UP	UP	–	UP
19	UP	UP	–	UP	UP	–	–
20	UP	UP	–	UP	–	UP	UP
21	UP	UP	–	UP	–	UP	–
22	UP	UP	–	UP	–	–	UP
23	UP	UP	–	UP	–	–	–
24	UP	UP	–	–	UP	UP	UP
25	UP	UP	–	–	UP	UP	–
26	UP	UP	–	–	UP	–	UP
27	UP	UP	–	–	UP	–	–
28	UP	UP	–	–	–	UP	UP
29	UP	UP	–	–	–	UP	–
30	UP	UP	–	–	–	–	UP
31	UP	UP	–	–	–	–	–
32	UP	–	UP	UP	UP	UP	UP
33	UP	–	UP	UP	UP	UP	–
34	UP	–	UP	UP	UP	–	UP
35	UP	–	UP	UP	UP	–	–
36	UP	–	UP	UP	–	UP	UP
37	UP	–	UP	UP	–	UP	–
38	UP	–	UP	UP	–	–	UP
39	UP	–	UP	UP	–	–	–
40	UP	–	UP	–	UP	UP	UP
41	UP	–	UP	–	UP	UP	–
42	UP	–	UP	–	UP	–	UP
43	UP	–	UP	–	UP	–	–
44	UP	–	UP	–	–	UP	UP
45	UP	–	UP	–	–	UP	–
46	UP	–	UP	–	–	–	UP
47	UP	–	UP	–	–	–	–
48	UP	–	–	UP	UP	UP	UP
49	UP	–	–	UP	UP	UP	–
50	UP	–	–	UP	UP	–	UP
51	UP	–	–	UP	UP	–	–
52	UP	–	–	UP	–	UP	UP
53	UP	–	–	UP	–	UP	–
54	UP	–	–	UP	–	–	UP
55	UP	–	–	UP	–	–	–
56	UP	–	–	–	UP	UP	UP
57	UP	–	–	–	UP	UP	–
58	UP	–	–	–	UP	–	UP
59	UP	–	–	–	UP	–	–
60	UP	–	–	–	–	UP	UP
61	UP	–	–	–	–	UP	–
62	UP	–	–	–	–	–	UP
63	UP	–	–	–	–	–	–
64	–	UP	UP	UP	UP	UP	UP
65	–	UP	UP	UP	UP	UP	–
66	–	UP	UP	UP	UP	–	UP
67	–	UP	UP	UP	UP	–	–
68	–	UP	UP	UP	–	UP	UP
69	–	UP	UP	UP	–	UP	–
70	–	UP	UP	UP	–	–	UP
71	–	UP	UP	UP	–	–	–
72	–	UP	UP	–	UP	UP	UP
73	–	UP	UP	–	UP	UP	–
74	–	UP	UP	–	UP	–	UP
75	–	UP	UP	–	UP	–	–
76	–	UP	UP	–	–	UP	UP
77	–	UP	UP	–	–	UP	–
78	–	UP	UP	–	–	–	UP
79	–	UP	UP	–	–	–	–
80	–	UP	–	UP	UP	UP	UP
81	–	UP	–	UP	UP	UP	–
82	–	UP	–	UP	UP	–	UP
83	–	UP	–	UP	UP	–	–
84	–	UP	–	UP	–	UP	UP
85	–	UP	–	UP	–	UP	–
86	–	UP	–	UP	–	–	UP
87	–	UP	–	UP	–	–	–
88	–	UP	–	–	UP	UP	UP
89	–	UP	–	–	UP	UP	–
BIT VALUE:	**64**	**32**	**16**	**8**	**4**	**2**	**1**

DIP SWITCH TABLES FOR POLLING LOOP DEVICES

4275 PIR

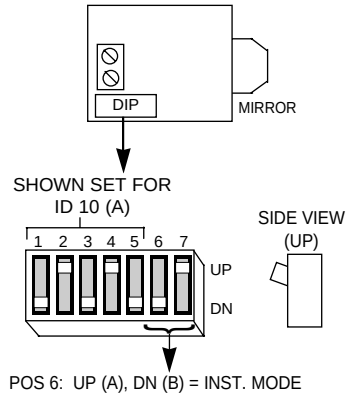

POS 6: UP (A), DN (B) = INST. MODE
DN (A), UP (B) = PULSE COUNT
POS. 7: UP (A), DN (B) = WALK TEST
DN (A), UP (B) = W/T DISABLE

4278 PIR

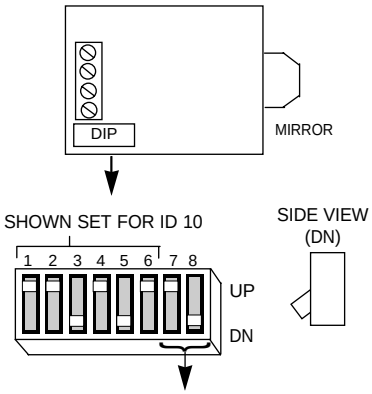

POS 7: UP = NORMAL MODE
DN = INSTANT MODE
POS. 8: UP = W/T DISABLE
DN = WALK TEST

4194 REED CONTACT (SURFACE MOUNT)

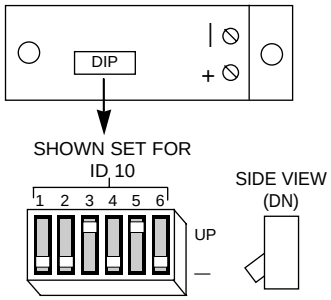

THIS TABLE FOR DIPS WITH WORD "DN" **A**

DEVICE ID	DIP SWITCH POSITION				
	1	2	3	4	5
10	—	UP	—	UP	—
11	—	UP	—	UP	UP
12	—	UP	UP	—	—
13	—	UP	UP	—	UP
14	—	UP	UP	UP	—
15	—	UP	UP	UP	UP
16	UP	—	—	—	—
17	UP	—	—	—	UP
18	UP	—	—	UP	—
19	UP	—	—	UP	UP
20	UP	—	UP	—	—
21	UP	—	UP	—	UP
22	UP	—	UP	UP	—
23	UP	—	UP	UP	UP
24	UP	UP	—	—	—
25	UP	UP	—	—	UP
26	UP	UP	—	UP	—
27	UP	UP	—	UP	UP
28	UP	UP	UP	—	—
29	UP	UP	UP	—	UP
30	UP	UP	UP	UP	—
31	UP	UP	UP	UP	UP

THIS TABLE FOR DIPS WITH WORD "UP" **B**

DEVICE ID	DIP SWITCH POSITION				
	1	2	3	4	5
10	UP	—	UP	—	UP
11	UP	—	UP	—	—
12	UP	—	—	UP	UP
13	UP	—	—	UP	—
14	UP	—	—	—	UP
15	UP	—	—	—	—
16	—	UP	UP	UP	UP
17	—	UP	UP	UP	—
18	—	UP	UP	—	UP
19	—	UP	UP	—	—
20	—	UP	—	UP	UP
21	—	UP	—	UP	—
22	—	UP	—	—	UP
23	—	UP	—	—	—
24	—	—	UP	UP	UP
25	—	—	UP	UP	—
26	—	—	UP	—	UP
27	—	—	UP	—	—
28	—	—	—	UP	UP
29	—	—	—	UP	—
30	—	—	—	—	UP
31	—	—	—	—	—
BIT VALUE:	16	8	4	2	1

DEVICE ID	DIP SWITCH POSITION					
	1	2	3	4	5	6
10	UP	UP	—	UP	—	UP
11	UP	UP	—	UP	—	—
12	UP	UP	—	—	UP	UP
13	UP	UP	—	—	UP	—
14	UP	UP	—	—	—	UP
15	UP	UP	—	—	—	—
16	UP	—	UP	UP	UP	UP
17	UP	—	UP	UP	UP	—
18	UP	—	UP	UP	—	UP
19	UP	—	UP	UP	—	—
20	UP	—	UP	—	UP	UP
21	UP	—	UP	—	UP	—
22	UP	—	UP	—	—	UP
23	UP	—	UP	—	—	—
24	UP	—	—	UP	UP	UP
25	UP	—	—	UP	UP	—
26	UP	—	—	UP	—	UP
27	UP	—	—	UP	—	—
28	UP	—	—	—	UP	UP
29	UP	—	—	—	UP	—
30	UP	—	—	—	—	UP
31	UP	—	—	—	—	—
32	—	UP	UP	UP	UP	UP
33	—	UP	UP	UP	UP	—
34	—	UP	UP	UP	—	UP
35	—	UP	UP	UP	—	—
36	—	UP	UP	—	UP	UP
37	—	UP	UP	—	UP	—
38	—	UP	UP	—	—	UP
39	—	UP	UP	—	—	—
40	—	UP	—	UP	UP	UP
41	—	UP	—	UP	UP	—
42	—	UP	—	UP	—	UP
43	—	UP	—	UP	—	—
44	—	UP	—	—	UP	UP
45	—	UP	—	—	UP	—
46	—	UP	—	—	—	UP
47	—	UP	—	—	—	—
48	—	—	UP	UP	UP	UP
49	—	—	UP	UP	UP	—
50	—	—	UP	UP	—	UP
51	—	—	UP	UP	—	—
52	—	—	UP	—	UP	UP
53	—	—	UP	—	UP	—
54	—	—	UP	—	—	UP
55	—	—	UP	—	—	—
56	—	—	—	UP	UP	UP
57	—	—	—	UP	UP	—
58	—	—	—	UP	—	UP
59	—	—	—	UP	—	—
60	—	—	—	—	UP	UP
61	—	—	—	—	UP	—
62	—	—	—	—	—	UP
63	—	—	—	—	—	—
BIT VALUE:	32	16	8	4	2	1

DEVICE ID	DIP SWITCH POSITION					
	1	2	3	4	5	6
10	—	—	UP	—	UP	—
11	—	—	UP	—	UP	UP
12	—	—	UP	UP	—	—
13	—	—	UP	UP	—	UP
14	—	—	UP	UP	UP	—
15	—	—	UP	UP	UP	UP
16	—	Up	—	—	—	—
17	—	UP	—	—	—	UP
18	—	UP	—	—	UP	—
19	—	UP	—	—	UP	UP
20	—	UP	—	UP	—	—
21	—	UP	—	UP	—	UP
22	—	UP	—	UP	UP	—
23	—	UP	—	UP	UP	UP
24	—	UP	UP	—	—	—
25	—	UP	UP	—	—	UP
26	—	UP	UP	—	UP	—
27	—	UP	UP	—	UP	UP
28	—	UP	UP	UP	—	—
29	—	UP	UP	UP	—	UP
30	—	UP	UP	UP	UP	—
31	—	UP	UP	UP	UP	UP
32	UP	—	—	—	—	—
33	UP	—	—	—	—	UP
34	UP	—	—	—	UP	—
35	UP	—	—	—	UP	UP
36	UP	—	—	UP	—	—
37	UP	—	—	UP	—	UP
38	UP	—	—	UP	UP	—
39	UP	—	—	UP	UP	UP
40	UP	—	UP	—	—	—
41	UP	—	UP	—	—	UP
42	UP	—	UP	—	UP	—
43	UP	—	UP	—	UP	UP
44	UP	—	UP	UP	—	—
45	UP	—	UP	UP	—	UP
46	UP	—	UP	UP	UP	—
47	UP	—	UP	UP	UP	UP
48	UP	UP	—	—	—	—
49	UP	UP	—	—	—	UP
50	UP	UP	—	—	UP	—
51	Up	UP	—	—	UP	UP
52	UP	UP	—	UP	—	—
53	UP	UP	—	UP	—	UP
54	UP	UP	—	UP	UP	—
55	UP	UP	—	UP	UP	UP
56	UP	UP	UP	—	—	—
57	UP	UP	UP	—	—	UP
58	UP	UP	UP	—	UP	—
59	UP	UP	UP	—	UP	UP
60	UP	UP	UP	UP	—	—
61	UP	UP	UP	UP	—	UP
62	UP	UP	UP	UP	UP	—
63	UP	UP	UP	UP	UP	UP
BIT VALUE:	32	16	8	4	2	1

Summary of System Commands

Event Logging Commands

Event Log Display = Code + [#] + 60 (Installer or Master Only)

Event Log Print = Code + [#] + 61 (Installer or Master Only)

Clear Event Log = Code + [#] + 62 (Installer or Master Only)

Wireless System Commands

House ID Sniffer Mode = Code + [#] + 2 (Installer Only)

Transmitter ID Test = Code + [#] + 3 (Installer Only)

Go/No Go Test = Code + 5 (Test Key)

User Code Commands

Add A User Code = User Code + 8 + New User Number + New User's Code

Change a Code = User Code + 8 + User Number + New User's Code

Delete a User's Code = Your User Code + 8 + User Number To Be Deleted + Your Code Again

View User Capability = User's Code + [*] + [*]

Set Real-Time Clock (Installer, Master Only) = Code + [#] +63

Arming Functions

Arming Away	Enter Code + Away [2].
Arming Stay	Enter Code + Stay [3].
Arming Instant	Enter Code + Instant [7].
Arming Maximum	Enter Code + Maximum [4].
Quick Arm	Use # Key Instead Of User Code Followed by Any of the Above Arming Mode Keys.
Global Arming	If Enabled for the User, the Keypad Will Display a Prompt. Answer The Prompted Questions
Disarming	Enter Code + Off [1].
Bypassing Zones	Enter Code + Bypass [6] + Zone Number.
Quick Bypass	To Automatically Bypass All Faulted Zones, Use "Quick Bypass" Method: Enter Code + Bypass + [#].
Chime Mode	Enter Code + Chime [9]. To Turn Chime Mode Off, Enter Code + Chime Again.
Partition GOTO	User Code + [*] + Partition Number 0-8.
GOTO Home Partition	User Code + [*] + 0.
Panics	[*] + 1 Zone 995 (A Key).
	[*] + [#] Zone 999 (B Key).
	[#] + 3 Zone 996 (C Key).
View Downloaded Messages	Press 0 for 5 Seconds.
Display All Zone Descriptors	Press [*] for 5 Seconds.
Display User Self Help	Hold Any Key for 5 Seconds

Programming Commands	Site Initiated Download = User Code + [#] + 1.
	Direct-Wire Download Enable = User Code + [#] + 5.
	Enter Program Mode = Installer Code + 8000.
	Exit Program Mode = *99 Or *98.
Scheduling Commands	Installer-Programmed Schedule Events = Installer Code + [#] + 80.
	Temporary Schedule Editing = User Code + [#] + 81 (Installer, Master, Manager Only).
	Extend Closing Window = User Code + [#] + 82 (Installer, Master, Manager Only).
	End User Output Device Programming = User Code + [#] + 83.
Output Device Control	Activate Output Device as Programmed = User Code + [#] + 71.
	Activate Output Device as Programmed = User Code + [#] + 72.
	Activate Output Device Manually = User Code + [#] + 70.
Access Control	Activate Access Relay for Current Partition = User Code + 0.
	Request to Enter/Exit = User Code + [#] + 73.
	Request to Enter/Exit at Access Point = User Code + [#] + 74 + Access Point Number.
	Change Access Point State = User Code + [#] = 75 + Access Point + State.
	Output Device Control may be accomplished via the [User Code] + [#] + [77] mode.
	Access Control Test may be accomplished via the [User Code] + [#] + [78] + [Grant Command]
	Card enrollment may be accomplished via the [User Code] + [#] + [79] mode.

Specifications

VISTA-128FB CONTROL

Physical:	18"H X 14-1/2"W X 4.3"D
Electrical:	
Primary Power:	From ADEMCO No. 1451 Transformer with enclosure; rated 18VAC, 72VA.
Backup Battery:	12VDC, 12AH min to 34.4AH max lead acid battery (gel type).
Alarm Power:	12VDC, 1.7 amps max for each bell output.
Aux. Standby Pwr	12VDC, 1 amp max.
Total Power	Combined auxiliary standby and alarm currents must not exceed 2.3 amps.
Standby Time:	24 hours with 1 amp aux standby load or 60 hours with 205ma aux. Standby load using 34.4AH battery.
Fusing:	Battery input, auxiliary and bell power outputs are protected using PTC circuit protectors. All outputs are power limited.
Main Dialer	
Line Seize:	Double Pole
Ringer Equivalence:	0.7B
FCC Registration No.:	AC398U-68192-AL-E
TLM Threshold	Good line when tip-to-ring voltage greater than approximately 25V (13 when blue jumper cut) or when handset current greater than approximately 10ma. Bad line when both voltage and current below these levels.
Formats:	ADEMCO High Speed, ADEMCO 4 + 2 Express, ADEMCO Low Speed, ADEMCO Contact ID, Sescoa and Radionics Low Speed
Agency Listings:	
Burglary:	UL609 Grade A Local Mercantile Premises and Mercantile Safe and Vault.
	UL611/UL1610 Grades A, AA Central Station.
	UL365 Grades A, AA Police Connect.
Fire:	UL864-NFPA 72 Local, Central Station, and Remote Station

5140DLM BACKUP DIALER MODULE

Physical:	2.75”H X 4”W X 1”D
	Mounts on VISTA-128FB main PC board shield using standoffs supplied.
	Connects to VISTA-128FB main PC board J3 header using ribbon cable supplied.
FCC Registration:	AC398U-62668-MO-N

5140LED ANNUNCIATOR MODULE

Physical:	4.5”H X 2.75”W X 1.5”D
	Mounts to single-gang electrical box.
Indicators:	AC Power, Comm Failure, Dialer 1 Fault and Dialer 2 Fault.
	Connect indicator inputs to VISTA-128FB trigger outputs (J2 header).

6139(R) Remote Keypads

Physical:

Width:	6.25 inches
Height:	4.75 inches
Depth:	1.25 inches

Electrical:

Voltage Input:	12VDC
Current Drain:	100 mA

Interface Wiring:

RED:	12VDC input (+) auxiliary power
BLUE:	Not Used
GREEN:	Data to control panel
YELLOW:	Data from control panel
BLACK:	Ground and (-) connection from supplemental power supply.

Index

#70 Relay Mode 30-6
#93 Menu Mode Programming 21-4
12/24 HOUR TIME STAMP FORMAT 24-14
1451 transformer 20-1
1451 Transformer D-1
24 Hour Trouble Type 19 22-3
24-hour Audible Alarm Type 07 22-2
24-hour Auxiliary Alarm Type 08 22-2
24-hour Silent Alarm Type 06 22-2
2-Wire Latching Glassbreak Detectors 6-5
2-Wire Smoke Detectors 6-2
3+1 and 4+1 Expanded Formats 26-2
3+1 and 4+1 Standard Formats 26-2
4+2 Format 26-2
4100APG LED Indications 19-4
4100APG Pager Interface 19-1
4100SM 12-8, 27-1
4100SM Interface Module 12-1
4100SM Serial Interface Module 18-1
4197 Polling Loop Extender 7-3
4204 and 4204CF Relay Modules 9-2
4285/4286 VIP Module 10-1
4297 Polling Loop Extender 7-3
4-Wire Smoke Detectors 6-3
5140DLM 17-1
5140DLM BACKUP DIALER MODULE D-1
5140LED ANNUNCIATOR MODULE D-1
5140LED Indicator Module 12-1, 12-4
5800 Series 8-4
5800TM Module 8-3
5800TM Wiring 8-4
6139 5-1
6139 ..... D-2
6139R 5-1
685 Receiver 11-2
7720 12-5
7720ULF 12-5
7820 Long Range Radio 13-1
7920SE 12-5
AAV 11-1
AAV Module Operation 11-1
AC 60Hz or 50Hz 24-13
AC LOSS KEYPAD SOUNDING 24-2
AC Transformer 4-4, 20-1
Access Group 29-5
Access Control 1-4, 14-1, 30-3, C-2
Access Control & Lighting and Appliances 14-7
Access Control Dialer Events 14-7
Access Control of an Entry/Exit Point 14-5
ACCESS CONTROL RELAY 24-15
Access Control Using RF Transmitter 14-6
Access Group Programming 14-4
Access Point Programming 14-4
Access Point Type 27 22-3
Access Schedules 25-7
Access Security 27-3
ACTION (A) 9-4
Action Code 25-11
Action Specifier 25-11
Active time 25-12
Addressing The Keypads 5-3
Ademco 4+2 Express 21-1, 26-1
ADEMCO 4+2 EXPRESS D-1
ADEMCO 4146 12-2
Ademco AB12. 4-2
Ademco Contact ID 21-1, 26-4
ADEMCO CONTACT ID D-1
Ademco Contact ID Reporting Format 26-2
Ademco High Speed 21-1, 26-1, 26-2
ADEMCO HIGH SPEED D-1
Ademco High Speed Reporting 26-3
Ademco Low Speed 21-1, 26-1
ADEMCO LOW SPEED D-1
Ademco No. N6277 Cam Lock 4-1
Ademco's Contact ID 26-1
Affects Lobby 2-2
AFFECTS LOBBY 24-10
Agency Listings 1-6, D-1
Agency Statements A-1
Alarm Power D-1
ALARM SOUNDS BELL 1, 2 24-17
Alarm-Saf 5-2
ALLOW DISARM OUTSIDE WINDOW IF ALARM OCCURS 24-16
ALLOW DISARMING ONLY DURING ARM/DISARM WINDOWS 24-16
ALPHA NUMERIC PAGER INSTALLED 24-7
Antenna Fault 13-3
Arm/Disarm Commands 25-11
Arm-Away Type 21 22-3
Arming Away 30-1
Arming Functions 30-1, C-1
Arming Instant 30-1
Arming Maximum 30-1
Arming Stay 30-1
Arms Lobby 2-2
ARMS LOBBY 24-10
Arm-Stay Type 20 22-3
Audio Alarm Verification 1-6, 11-1
Audio Alarm Verification Module Connections 11-2
Authority Levels and Modification Rules 29-3
Auto Arming 25-1
Auto Disarming 25-2

AUTO-ARM DELAY 24-15
Auto-Arm Delay 25-2
Auto-Arm Warning 25-2
AUTO-ARM WARNING PERIOD 24-15
AUTO-DISARM DELAY 24-15
AUX RELAY FUNCTION SELECTION 24-19
Aux. Standby Pwr D-1
Auxiliary Alarm Signaling Equipment 12-5
AUXILIARY INPUT ALTERNATE FUNCTION ENABLE 24-18
Auxiliary Relay 1-4, 16-1
Auxiliary Relay 4-Wire Smoke Detector Reset 16-2
Auxiliary Relay Alarm Activation 16-1
Auxiliary Relay Battery Saver 16-2
Auxiliary Relay Trouble/Supervisory Activation 16-2
Backup Battery D-1
Backup Dialer 1-5
BACKUP DIALER TOUCHTONE/ROTARY 24-18
Backup Power Calculations 20-2
Basic Hardwired Zones 1-1, 6-1
Battery 4-4
Battery Capacity Calculation Worksheet 6
BATTERY SELECTION TABLE 6
Battery Test 31-1
BELL 1 CONFIRMATION OF ARMING DING 24-2
BELL 1 TIMEOUT 24-2
Bell 1, and Bell 2 outputs 15-1
BELL 2 & AUX RELAY CONFIRMATION OF ARMING DING 24-19
BELL 2 & AUX RELAY TIMEOUT 24-19
Bell Circuit Supervision 15-1
Bell Outputs 1-3
Bell Outputs Programming 15-3
Built-in User's Manual 1-6
BURG. ALARM COMM. DELAY 24-10
BURG. TRIGGER FOR RESPONSE TYPE 8 24-3
Burglary Walk Test 31-3
Button RF 8-5
Bypass Commands 25-12
Bypassing Zones 30-2
California State Fire Marshal A-3
Call Waiting Defeat 3-3
CALL WAITING DEFEAT 24-12
Callback 27-2
CALLBACK REQUESTED 27-3
CANADIAN DEPARTMENT OF COMMUNICATIONS A-5
Characteristics of Polling Loop 7-1
Characteristics of Wireless Zones 8-1
Check Messages 31-4
CHECK or TRBL 7-5
CHECK OR TRBL DISPLAY 24-17
CHECKSUM VERIFICATION 24-6
Chime Mode 30-2
CHIME ON BELL 1 24-13
Class B supervision 15-1
Code + #73 14-5
Code + #74 14-5
Code + #75 14-5
Code + [#] + 68 31-2
Code + [#] + 69 31-1
Code + TEST [5] 31-3
COMM FAIL 17-2
COMM. FAILURE 31-5
COMM. SPLIT REPORT SELECTION 24-12
Common Lobby 2-2
Communication Defaults 21-1
Communications Formats 1-5
Compass 27-1
Compass Downloading Software 12-8, 27-3
Compatible 2-Wire Smoke Detectors 6-3
Compatible 4-Wire Smoke Detectors 6-4
Compatible 5800 Series Transmitters 8-1, 8-6
Compatible Alarm Indicating Devices 15-2
Compatible Glass Break Detectors 6-5
Compatible Polling Loop Devices 7-6, 7-8
Connecting the Backup Battery 20-3
CONTACT ID EVENT CODES 26-5
Contacting Technical Support 31-6
CROSS ZONING PAIR FOUR 24-11
CROSS ZONING PAIR ONE 24-11
CROSS ZONING PAIR THREE 24-11
CROSS ZONING PAIR TWO 24-11
Cross-Zoning 1-6
Data Encryption 27-3
Data Field Descriptions 24-1
Data Field Program Mode 21-1
DAYLIGHT SAVINGS TIME START/END MONTH 24-15
DAYLIGHT SAVINGS TIME START/END WEEKEND 24-15
DELAY FOR ZONE TYPES 17 & 18 24-17
DIAL TONE DETECTION 24-6
DIAL TONE PAUSE 24-5
DIALER 1 FAULT 17-2
DIALER 2 FAULT 17-2
Dialer Operation 17-2
Dialer Outputs 17-1
DIALER SELECTION 24-18
Dialer Test 31-1
DIGITAL COMMUNICATOR D-1
DIP Switch Tables B-1
DIP switches 7-2
Direct Wire Downloading 12-8
Direct-Wire Downloading 27-3
DISABLE DOWNLOAD CALLBACK 24-13
Disarm Delay 25-2
Disarm Type 22 22-3
Disarming 30-2
DISPLAY BURG & PANIC ALARMS OF OTHER PARTITIONS 24-17
Display Faulted Zones 30-1
DISPLAY FIRE ALARMS OF OTHER PARTITIONS 24-17
DISPLAY TROUBLES OF OTHER PARTITIONS 24-17
Door Status Monitor 14-4
DOWNLOAD COMMAND ENABLES 24-5
DOWNLOAD ID NUMBER 24-5
DOWNLOAD PHONE NUMBER 24-5
Downloading 1-6, 27-1
Downloading Requirements 27-1
DUAL REPORTING 24-7

Duress 29-1
Duress Reporting 29-3
Early Power Detect 13-3
Earth Ground 4-4
Earth Ground Connections 20-2
ENABLE 5800 RF BUTTON FORCE ARM 24-14
ENABLE 5800 RF BUTTON GLOBAL ARM 24-13
ENABLE BELL 2 & AUX RELAY CHIME ANNUNCIATION 24-19
ENABLE BURG FEATURES ON PARTITION 1 .. 24-19
ENABLE DIALER REPORTS FOR PANICS & DURESS 24-9
ENABLE FORCE ARM FOR AUTO-ARM 24-16
ENABLE GOTO FOR THIS PARTITION 24-16
ENABLE J2 TRIGGERS BY PARTITION 24-16
ENABLE OPEN/CLOSE REPORT FOR INSTALLER CODE 24-5
Entering Programming Mode 21-2
ENTRY DELAY #1 24-1
ENTRY DELAY #2 24-1
Entry Errors 21-2
ENTRY WARNING 24-10
Entry/Exit #1 Type 01 22-1
Entry/Exit #2 Type 02 22-2
EVENT (EV) 9-5
Event Log 1-5
EVENT LOG 12-8
Event Log clear 18-4
Event Log Options 18-1
Event Log Printer Connections 12-8, 18-1
EVENT LOG PRINTER ON-LINE 24-14
Event Log Programming 18-2
EVENT LOG TYPES 24-14
Event Logging Commands C-1
Event Logging Procedures 18-3
Event/Action Programming 14-4
Exception Reports 25-3
EXIT DELAY #1 24-1
EXIT DELAY #2 24-1
Exit Delay Reset 3-2
EXIT DELAY RESET 24-10
EXIT DELAY SOUNDING 24-13
Exit Error 1-6, 3-1
EXIT ERROR LOGIC 24-10
Extend Closing Window 25-2
EXTENDED DELAY FOR TYPES 17 & 18 24-18
Extending Closing Time 30-3
External Sounders 15-1
False Alarm Reduction 3-1
FCC PART 68 NOTICE A-4
FCC REGISTRATION NO D-1
FEDERAL COMMUNICATIONS COMMISSION (FCC) STATEMENT A-4
FIRE ALARM SILENCED 15-4
Fire Alarm Verification 6-4
FIRE DISPLAY LOCK 24-17
Fire Drill Test 31-1
Fire Supervisory Type 18 22-3
Fire Walk-Test Mode 1-6
Fire Waterflow Type 17 22-3
Fire With Verification Type 16 22-3
First Communication 27-2
FIRST TEST REPORT TIME 24-9
Force Arm 25-2
Frwd. Power Loss 13-3
Fusing D-1
General Description 1-1
General Purpose 14-4
Getting On-Line with a Control Panel 27-2
Global Arm ? 29-5
Global Arming 2-4, 30-2
Go/No Go Test Mode 8-8
GOTO Commands 30-3
Grade A Mercantile Premises Listing 4-2
Grade A Mercantile Safe and Vault Listing 4-2
Grade A Service A-2
Grade AA Service A-2
HANDSHAKE 26-1
Holiday Schedule 25-5
Holiday Schedule Programming 25-10
Holiday Schedule Worksheet 25-10
Holiday schedules 25-7
House ID Sniffer Mode 8-4
HSENS 31-5
IGNORE EXPANSION ZONE TAMPER 24-3
Installer Code 29-1
INSTALLER CODE 24-1
Installing the Control 4-1
Installing the Control's Circuit Board 4-3
INTELLIGENT TEST REPORTING 24-3
Interior w/Delay Type 10 22-3
Interior, Follower Type 04 22-2
J2 Trigger Outputs 12-1
Keypad Functions 30-1
Keypad Macros 1-3
KEYPAD PANIC ENABLES 24-2
Keypad Panic Keys 1-3
Keypad Port 1 5-2
Keypad Port 2 5-2
Keypads 2-1, 5-1
Keyswitch 1-5
KEYSWITCH ASSIGNMENT 24-2
Keyswitch LEDs 12-4
Keyswitch Operation and Wiring 12-2
KISSOFF 26-1
Level 0 Installer (User 1) Codes 29-2
Level 1 Master Codes 29-2
Level 2 Manager Codes 29-2
Level 6 Duress Codes 29-3
Levels 3-5 Operator Codes 29-2
Limitation of Access 25-3
Limitation of Access Schedules 25-15
Limitation Of Access Schedules Programming 25-15
LINE SEIZE D-1
List of Figures viii
Listen-In to Follow 11-1, 11-2
LO BAT 31-5
LOBBY PARTITION 24-10
LOG FIRST MAINTENANCE SIGNAL 24-15
LONG RANGE RADIO CENTRAL STATION #1 CATEGORY ENABLE 24-7
LONG RANGE RADIO CENTRAL STATION #2 CATEGORY ENABLE 24-7

Long Range Radio Trouble Messages 13-3
Long Range Subscriber..... 12-1
LOW SPEED FORMAT (PRIMARY) 24-6
LOW SPEED FORMAT (SECONDARY) 24-6
LRR Battery 13-3
LRR CRC is bad 13-3
LRR reporting options 13-1
LSENS 31-5
Macros 30-5
MAIN DIALER (TOUCH-TONE OR ROTARY DIAL)..... 24-4
Main Logic Board..... 14-5
Main Logic Board (MLB) Supervision Type 28 22-4
Maintenance Signal Support..... 1-2
Manager Code 29-1
Manual Relay Activation Mode..... 30-6
Master Code 29-1
Master Keypad..... 2-5
MAX # OF DIALER RETRIES 24-18
Mechanics of Programming..... 21-1
MODEM COMM 27-3, 31-5
Momentary on Exit Type 29..... 22-4
Mounting the 4100APG 19-1
Mounting the Control Cabinet 4-1
Mounting The Keypads 5-3
Mounting the VIP Module..... 10-2
Multi-Access ? 29-5
MULTIPLE ALARMS..... 24-3
Multiple Partition Access 29-4
National Electric Code..... 4-4
No Alarm Response Type 23 22-3
NORMALLY CLOSED OR EOLR (ZONES 3-8)..... 24-5
NUMBER OF PARTITIONS 24-15
OC or OPEN CIRCUIT 5-3
Off-Normal Report 31-5
One-Man Fire Walk-Test..... 31-2
On-Line Control Functions..... 27-2
OPEN/CLOSE REPORTING FOR KEYSWITCH ... 24-5
Open/Close Reporting 29-3
Open/Close Reports by Exception 25-5
OPEN/CLOSE REPORTS BY EXCEPTION 24-16
Open/Close Schedule 25-4
Open/Close Schedule Programming..... 25-9
Open/Close Schedule Worksheet..... 25-9
Open/Close Schedules..... 25-7
Open/Close Windows 25-12
Operator Access Levels..... 27-3
Operator Level Codes 29-1
Output Device Control.....C-2
Output Relays 1-4
PABX ACCESS CODE..... 24-4
PAGER ID NUMBER FOR ALARMS..... 24-8
PAGER ID NUMBER FOR BYPASSES 24-8
PAGER ID NUMBER FOR OPENS/CLOSES..... 24-8
PAGER ID NUMBER FOR SYSTEM 24-9
PAGER ID NUMBER FOR TEST..... 24-9
PAGER ID NUMBER FOR TROUBLES 24-8
PAGER PHONE NUMBER FOR ALARMS 24-8
PAGER PHONE NUMBER FOR BYPASSES..... 24-8
PAGER PHONE NUMBER FOR OPENS/CLOSES. 24-8
PAGER PHONE NUMBER FOR SYSTEM..... 24-8
PAGER PHONE NUMBER FOR TEST..... 24-9
PAGER PHONE NUMBER FOR TROUBLES..... 24-8
PANIC BUTTON OR SPEEDKEY..... 24-11
Panic Keys..... 30-4
PARTITION No. (P)..... 9-5
Partitions 1-2
PassPoint 14-1, 30-3
PassPoint Access Control System 14-5
Perimeter Type 03 22-2
Peripheral Devices..... 1-3
PERMANENT KEYPAD DISPLAY BACKLIGHTING..... 24-12
Phone Access User's Guide.....10-1
Planning a Partitioned System 2-1
PLL out of Lock..... 13-3
POLLING LOOP CURRENT DRAW WORKSHEET..... 20-3
Polling Loop Expansion..... 1-1, 7-1
Polling Loop Supervision..... 7-5
Polling Loop Wire Runs..... 7-2
Power Failure..... 31-6
Power Unattained..... 13-3
POWER UP IN PREVIOUS STATE 24-3
Power-Up Procedure..... 20-1
PREVENT ZONE XXX BYPASS..... 24-5
PRIMARY FORMAT..... 24-6
PRIMARY PHONE NUMBER 24-4
PRIMARY SUBSCRIBER ACCT # 24-4
PRINTER BAUD RATE 24-14
Printer Configurations 18-1
Programming Audio Alarm Verification 11-2
Programming Commands.....C-2
PROGRAMMING COMMANDS 21-3
Programming for 4100APG 19-3
Programming Partition-Specific Data Fields 21-3
Programming Scheduling Options..... 25-6
Programming System-Wide Data Fields 21-3
Programming the Control for the Long Range Radio..... 13-2
PS24 Power Supply..... 20-1
PS24 Power Supply Module 1-5, 20-2
Quick Arm 29-1
QUICK ARM 24-4
Quick Arming..... 30-2
RANDOMIZE AC LOSS REPORT 24-2
RCVR SET UP ERROR 31-5
REAL TIME CLOCK 18-3
Real-Time Clock..... 28-1
Recent Close Report..... 3-1
Refresh Feature 25-13
Regulatory Agency Statements.....A-1
Relay commands 25-11
Relay Outputs 9-1
Relay Programming..... 9-4
RELAY TIMEOUT XXX MINUTES 24-14
RELAY TIMEOUT YYY SECONDS 24-14
Remote Keypad Sounder 12-2
Remote Point Modules..... 7-1
Reporting Formats..... 26-1
Request to Exit 14-4
RESET ON SECOND OFF FOR BELL 1 24-18
RESET ON SECOND OFF FOR BELL 2 24-18

RESTORE REPORT TIMING 24-10
Restrict Disarming..... 25-2
RF RCVR SUPERVISION CHECK-IN INTERVAL 24-12
RF System Installation Advisories 8-2
RF System Operation and Supervision 8-2
RF TRANSMITTER CHECK-IN INTERVAL 24-12
RF TX LOW BATTERY REPORT ENABLE 24-11
RF TX LOW BATTERY SOUND..... 24-11
Ring Count 27-2
RING DETECTION COUNT..... 24-6
RINGER EQUIVALENCE.....D-1
RJ31X jack 10-2
RTE..... 14-4
Scheduling..... 1-5, 25-1
Scheduling Commands C-2
Scheduling Menu Mode 25-6
Scheduling Menu Structure 25-7
SECONDARY FORMAT..... 24-6
SECONDARY PHONE NUMBER 24-4
SECONDARY SUBSCRIBER ACCT # 24-10
SEND CANCEL IF ALARM + OFF 24-13
Serial Number Devices 7-2
serial printer 19-3
SESCOA D-1
Sescoa/Radionics 26-1
SESCOA/RADIONICS SELECT 24-6
Setting Up a Partitioned System 2-2
Setup of the 4281/5881 RF Receivers 8-3
Specifications D-1
Speed Key [D] Macros..... 30-5
STANDARD/EXPANDED REPORT PRIMARY..... 24-7
STANDARD/EXPANDED REPORT SECONDARY. 24-7
START (STT)..... 9-5
STOP (STP) 9-5
Supervised Fire (Without Verification) Type 09 22-2
Supervised RF 8-5
SUPERVISION PULSES FOR LORRA TRIGGER OUTPUTS 24-16
Supervisory Messages 31-4
SUPERVISORY ON OPEN & SHORT 24-17
SUPPRESS TX SUPERVISION SOUND 24-13
SWINGER SUPPRESSION..... 24-9
System Commands C-1
System Communication..... 26-1
System Defaults..... 21-1
SYSTEM LO BAT 31-5
System LoBat”..... 31-1
System Messages 31-5
System Sensor A77-716B EOL Relay Module..... 6-3
SYSTEM ZONE BYPASS INHIBIT..... 24-19
System Zones 1-2
Telephone Line Connections 17-1
Telephone Line Supervision..... 17-1
TEMPORAL SIREN PULSE 24-1
Temporary Schedule..... 25-5
Temporary Schedule Worksheet 25-16
Temporary Schedules 25-16
Temporary Schedules Programming 25-17
TEST REPORT INTERVAL 24-3
Testing The System 31-1
Theory of Partitioning 2-1
Time and Date 28-1
Time Driven Events..... 25-3
Time Driven Events Worksheet..... 25-11
Time Window Definitions..... 25-3
Time Windows 25-7
Time Windows Definitions Worksheet 25-8
Time Windows Programming..... 25-8
Timed Events 25-7
Time-Driven Event Programming 25-13
Time-Driven Event Worksheet 25-11
To ADD a Master, Manager, or Operator Code..... 29-4
To Add an RF Key to an Existing User 29-6
To CHANGE a Master, Manager, or Operator Code 29-6
To Delete a Master, Manager, or Operator Code..... 29-6
To EXIT The User Edit Mode 29-7
Total Control Panel Load Worksheets..... 20-4
TOUCH-TONE W/ROTARY BACKUP 24-12
Transmitter Battery Life..... 8-5
Transmitter Input Types..... 8-5
Transmitter Supervision 8-5
TRIGGER OUTPUTS FUNCTION SELECTION.. 24-18
Trouble by Day/Alarm by Night Type 05..... 22-2
Trouble Conditions 31-4
Trouble Messages 31-4
Turning the System Over to the User 31-6
UL Installation Requirements A-1
UL365 Police Station Connected Burglar Alarm A-2
UL609 Grade A Local Mercantile Premises/Local Mercantile Safe & Vault.....A-2
UL611/UL1610 Central Station Burglary Alarm A-2
UL864/NFPA Central Station and Remote Station Fire A-1
UL864/NFPA Local Fire.....A-1
UNABLE TO ARM LOBBY PARTITION..... 2-3
Unsupervised RF 8-5
USE LONG RANGE RADIO IF DIALER FAILS..... 24-7
USE LONG RANGE RADIO ONLY 24-7
USE PARTITION DESCRIPTORS..... 24-16
User Access Codes 29-1
User Code Commands C-1
User Codes 1-3
User Codes Authority Levels 29-1
User Scheduling Menu Mode 25-18
Users 2-1
Using a Supplementary Power Supply..... 5-2
Using ACS Zone Inputs..... 14-6
Using the Built-in User’s Manual..... 30-4
View Capabilities..... 29-1
Viewing Capabilities Of A User 30-4
Viewing Data Fields 21-2
Viewing Downloaded Messages 30-4
Viewing Zone Descriptors..... 30-4
VIP Module 10-1
VIP MODULE PHONE CODE..... 24-2
Vista Gateway Module 14-7, 30-3
Vista Interactive Phone Module 1-4
VISTA-128B Stand-alone Access Control..... 14-7
VistaKey..... 14-1
VistaKey module..... 14-1
VLINK 27-3

Voltage Triggers 1-5
WATERFLOW SILENCE OPTION 24-17
Wire Run Length 5-1
Wireless Expansion 1-2
WIRELESS KEYPAD ASSIGNMENT..... 24-13
WIRELESS KEYPAD TAMPER DETECT 24-13
Wireless System Commands C-1
Wireless Zone Expansion 8-1
Wiring Bell Outputs 15-2
Wiring Devices to Zones 1-8 6-1
Wiring the 4100APG..... 19-2
Wiring the Long Range Radio 13-2
Wiring the VIP Module..... 10-2
Wiring the VistaKey 14-3
Wiring To The Keypads 5-1
Wiring/Addressing RPM Devices 7-2
World Wide Web Address 31-6
ZN TYPE 18 DELAY USE..... 24-17
ZONE 5 AUDIO ALARM VERIFICATION 24-14
ZONE 6 ALTERNATE FUNCTION ENABLE 24-17
Zone 6 Alternate Tamper Function 4-2
Zone 6 Tamper Configuration 6-4
Zone 804 10-1
Zone 973 12-1
Zone Index..... 23-1
ZONE LIST (ZL) 9-5
Zone Type Defaults 23-2
Zone Type Definitions..... 22-1
ZONE TYPE RESTORE ENABLES FOR ZONE TYPES 16-18 24-18
ZONE TYPE RESTORES FOR TYPES 9/10 24-9
ZONE TYPE RESTORES FOR ZONE TYPES 1-8 .. 24-9
ZONE TYPE/SYSTEM OPERATION (ZT). 9-5
Zones 2-1

WARNING!
THE LIMITATIONS OF THIS ALARM SYSTEM

While this System is an advanced wireless security system, it does not offer guaranteed protection against burglary, fire or other emergency. Any alarm system, whether commercial or residential, is subject to compromise or failure to warn for a variety of reasons. For example:

- Intruders may gain access through unprotected openings or have the technical sophistication to bypass an alarm sensor or disconnect an alarm warning device.
- Intrusion detectors (e.g., passive infrared detectors), smoke detectors, and many other sensing devices will not work without power. Battery-operated devices will not work without batteries, with dead batteries, or if the batteries are not put in properly. Devices powered solely by AC will not work if their AC power supply is cut off for any reason, however briefly.
- Signals sent by wireless transmitters may be blocked or reflected by metal before they reach the alarm receiver. Even if the signal path has been recently checked during a weekly test, blockage can occur if a metal object is moved into the path.
- A user may not be able to reach a panic or emergency button quickly enough.
- While smoke detectors have played a key role in reducing residential fire deaths in the United States, they may not activate or provide early warning for a variety of reasons in as many as 35% of all fires, according to data published by the Federal Emergency Management Agency. Some of the reasons smoke detectors used in conjunction with this System may not work are as follows. Smoke detectors may have been improperly installed and positioned. Smoke detectors may not sense fires that start where smoke cannot reach the detectors, such as in chimneys, in walls, or roofs, or on the other side of closed doors. Smoke detectors also may not sense a fire on another level of a residence or building. A second floor detector, for example, may not sense a first floor or basement fire. Finally, smoke detectors have sensing limitations. No smoke detector can sense every kind of fire every time. In general, detectors may not always warn about fires caused by carelessness and safety hazards like smoking in bed, violent explosions, escaping gas, improper storage of flammable materials, overloaded electrical circuits, children playing with matches, or arson. Depending on the nature of the fire and/or location of the smoke detectors, the detector, even if it operates as anticipated, may not provide sufficient warning to allow all occupants to escape in time to prevent injury or death.
- Passive Infrared Motion Detectors can only detect intrusion within the designed ranges as diagrammed in their installation manual. Passive Infrared Detectors do not provide volumetric area protection. They do create multiple beams of protection, and intrusion can only be detected in unobstructed areas covered by those beams. They cannot detect motion or intrusion that takes place behind walls, ceilings, floors, closed doors, glass partitions, glass doors, or windows. Mechanical tampering, masking, painting or spraying of any material on the mirrors, windows or any part of the optical system can reduce their detection ability. Passive Infrared Detectors sense changes in temperature; however, as the ambient temperature of the protected area approaches the temperature range of 90° to 105°F (32° to 40°C), the detection performance can decrease.
- Alarm warning devices such as sirens, bells or horns may not alert people or wake up sleepers if they are located on the other side of closed or partly open doors. If warning devices are located on a different level of the residence from the bedrooms, then they are less likely to waken or alert people inside the bedrooms. Even persons who are awake may not hear the warning if the alarm is muffled by noise from a stereo, radio, air conditioner or other appliance, or by passing traffic. Finally, alarm warning devices, however loud, may not warn hearing-impaired people.
- Telephone lines needed to transmit alarm signals from a premises to a central monitoring station may be out of service or temporarily out of service. Telephone lines are also subject to compromise by sophisticated intruders.
- Even if the system responds to the emergency as intended, however, occupants may have insufficient time to protect themselves from the emergency situation. In the case of a monitored alarm system, authorities may not respond appropriately.
- This equipment, like other electrical devices, is subject to component failure. Even though this equipment is designed to last as long as 20 years, the electronic components could fail at any time.

The most common cause of an alarm system not functioning when an intrusion or fire occurs is inadequate maintenance. This alarm system should be tested weekly to make sure all sensors and transmitters are working properly. The security keypad (and remote keypad) should be tested as well.

Wireless transmitters (used in some systems) are designed to provide long battery life under normal operating conditions. Longevity of batteries may be as much as 4 to 7 years, depending on the environment, usage, and the specific wireless device being used. External factors such as humidity, high or low temperatures, as well as large swings in temperature, may all reduce the actual battery life in a given installation. This wireless system, however, can identify a true low battery situation, thus allowing time to arrange a change of battery to maintain protection for that given point within the system.

Installing an alarm system may make the owner eligible for a lower insurance rate, but an alarm system is not a substitute for insurance. Homeowners, property owners and renters should continue to act prudently in protecting themselves and continue to insure their lives and property. We continue to develop new and improved protection devices. Users of alarm systems owe it to themselves and their loved ones to learn about these developments.

ADEMCO LIMITED WARRANTY

Alarm Device Manufacturing Company, a Division of Pittway Corporation, and its divisions, subsidiaries and affiliates ("Seller"), 165 Eileen Way, Syosset, New York 11791, warrants its products to be in conformance with its own plans and specifications and to be free from defects in materials and workmanship under normal use and service for 24 months from the date stamp control on the product or, for products not having an ADEMCO date stamp, for 12 months from date of original purchase unless the installation instructions or catalog sets forth a shorter period, in which case the shorter period shall apply. Seller's obligation shall be limited to repairing or replacing, at its option, free of charge for materials or labor, any product which is proved not in compliance with Seller's specifications or proves defective in materials or workmanship under normal use and service. Seller shall have no obligation under this Limited Warranty or otherwise if the product is altered or improperly repaired or serviced by anyone other than ADEMCO factory service. For warranty service, return product transportation prepaid, to ADEMCO Factory Service, 170 Michael Drive, Syosset, New York 11791.

THERE ARE NO WARRANTIES, EXPRESS OR IMPLIED, OF MERCHANTABILITY, OR FITNESS FOR A PARTICULAR PURPOSE OR OTHERWISE, WHICH EXTEND BEYOND THE DESCRIPTION ON THE FACE HEREOF. IN NO CASE SHALL SELLER BE LIABLE TO ANYONE FOR ANY CONSEQUENTIAL OR INCIDENTAL DAMAGES FOR BREACH OF THIS OR ANY OTHER WARRANTY, EXPRESS OR IMPLIED, OR UPON ANY OTHER BASIS OF LIABILITY WHATSOEVER, EVEN IF THE LOSS OR DAMAGE IS CAUSED BY THE SELLER'S OWN NEGLIGENCE OR FAULT.

Seller does not represent that the products it sells may not be compromised or circumvented; that the products will prevent any personal injury or property loss by burglary, robbery, fire or otherwise; or that the products will in all cases provide adequate warning or protection. Customer understands that a properly installed and maintained alarm may only reduce the risk of a burglary, robbery, fire or other events occurring without providing an alarm, but it is not insurance or a guarantee that such will not occur or that there will be no personal injury or property loss as a result. CONSEQUENTLY, SELLER SHALL HAVE NO LIABILITY FOR ANY PERSONAL INJURY, PROPERTY DAMAGE OR OTHER LOSS BASED ON A CLAIM THE PRODUCT FAILED TO GIVE WARNING. HOWEVER, IF SELLER IS HELD LIABLE, WHETHER DIRECTLY OR INDIRECTLY, FOR ANY LOSS OR DAMAGE ARISING UNDER THIS LIMITED WARRANTY OR OTHERWISE, REGARDLESS OF CAUSE OR ORIGIN, SELLER'S MAXIMUM LIABILITY SHALL NOT IN ANY CASE EXCEED THE PURCHASE PRICE OF THE PRODUCT, WHICH SHALL BE THE COMPLETE AND EXCLUSIVE REMEDY AGAINST SELLER. This warranty replaces any previous warranties and is the only warranty made by Seller on this product. No increase or alteration, written or verbal, of the obligations of this Limited Warranty is authorized.

WARNING: OWNER'S INSTRUCTION NOTICE NOT TO BE REMOVED

REFER TO INSTRUCTIONS N8988 FOR ADDITIONAL INFORMATION

TEST BURGLARY SYSTEM WEEKLY

This equipment should be installed in accordance with the National Fire Protection Association's Standard 72 (National Fire Protection Assoc., Batterymarch Park, Quincy, MA. 02269). Printed information describing proper installation, operation, testing, maintenance and repair service is to be provided with this equipment.

WARNING:
THIS UNIT MAY BE PROGRAMMED TO INCLUDE AN ALARM VERIFICATION FEATURE THAT WILL RESULT IN A DELAY OF THE SYSTEM ALARM SIGNAL FROM THE INDICATED FIRE CIRCUITS. THE TOTAL DELAY (CONTROL UNIT PLUS SMOKE DETECTORS) SHALL NOT EXCEED 60 SECONDS. NO OTHER INITIATING DEVICES SHALL BE CONNECTED TO THESE CIRCUITS UNLESS APPROVED BY THE LOCAL AUTHORITY HAVING JURISDICTION.

CIRCUIT (ZONE)	CONTROL UNIT DELAY-SEC	SMOKE DETECTOR MODEL	DELAY-SEC

THE DELAY TIME MARKED ON THE INSTALLED DETECTOR(S) IS TO BE USED

TYPES OF FIRE SIGNALLING SERVICE:
Manual fire alarm, automatic fire alarm, sprinkler supervisory and waterflow alarm. UL Listed local control (non-coded).
UL Listed central station and remote station protected premises unit when used with 5140DLM back-up dialer module.
Installation limits under jurisdiction of local authority.

Attach 5140DLM module to main PCB shield using 4 standoffs (supplied)

BACK-UP LINE SEIZE LED (GREEN)

The 5140DLM Dialer Complies with FCC Rules, Part 68 FCC Reg. No.: AC398U-68628-MO-N Ringer Equivalence: 0.7B

BACK-UP PHONE JACK
SEE TELCO JACK SHOCK WARNING BELOW
RJ31X
(connect using supplied cable)
Supervision is programmable

Connect to main PCB header J3 using ribbon cable (supplied)

BACK-UP DIALER ON HOOK VOLTAGE THRESHOLD (BLUE)
INTACT: 25V
CUT: 13V

BACK-UP DIALER EARTH GROUND SCREW (wire to main PCB terminal #30)

OPTIONAL 5140DLM BACK-UP DIALER MODULE

MAIN PCB SHIELD

J2 VOLTAGE TRIGGERS
See instructions for trigger use and programming (default functions shown)
1. OUT 4 (SILENT PANIC/DURESS)
2. OUT 7 (TROUBLE)
3. OUT 3 (BURGLARY/AUDIBLE PANIC)
4. OUT 6 (SUPERVISORY)
5. OUT 2 (FIRE)
6. OUT 5 (REMOTE KEYPAD SOUNDER)
7. OUT 1 (OPEN/CLOSE)
8. GROUND
9. IN 1 (N.O. LOOP)

RATINGS: OUT 1, 5, 7:
LOW: 2K TO GROUND
HIGH: 10 - 14VDC, 20mA MAX
OTHER OUTS: LOW: 1K TO GROUND
HIGH: 10 - 14VDC THRU 5K

VOLTAGE TRIGGERS (not supervised)
1 2 3 4 5 6 7 8 9 J2
Make connections using 4142TR cable (not supplied)

MAIN DIALER ON HOOK VOLTAGE THRESHOLD
INTACT:25V
CUT: 13V
W6 (BLUE)

BATTERY TABS
BLK − + RED

Connect to 12V, 12AH min/34.4AH max lead acid batteries using cables supplied. See instructions for required capacity. Float charging voltage: 13.7VDC. Battery normally need not be replaced for at least 3 yrs.

BELL CIRCUIT SUPERVISION JUMPERS
INTACT: Supervised using 2k EOLR
CUT: Not supervised (no EOLR used)
BELL 1 BELL 2
W1 (WHITE) W4 (WHITE)

KEYPAD PORT #2
1 2 3 4 5 6 7 8 9 J4
Make connections using 4142TR cable (supplied) (not supervised)

J4 KEYPAD PORT #2
See instr. regarding port #2 use
1. GROUND (to keypad black wire)
4. DATA IN 2 (to keypad green wire)
5. AUX PWR #2 (to keypad red wire) Rating: 10 - 14 VDC, 400mA max. See note 1
7. DATA OUT 2 (to keypad yellow wire)

PINS 2, 3, 6, 8 & 9 NOT USED

CONNECTION OF THE FIRE ALARM SIGNAL TO A FIRE ALARM HEAD-QUARTERS OR A CENTRAL STATION SHALL BE PERMITTED ONLY WITH THE APPROVAL OF THE LOCAL AUTHORITY HAVING JURISDICTION. THE BURGLARY ALARM SIGNAL SHALL NOT BE CONNECTED TO A POLICE EMERGENCY NUMBER.

INTERFACE TO 5140DLM
J3

MAIN
RJ31X
Connect RJ31X using cable supplied. Supervision is programmable
PHONE JACK

OPTIONAL REMOVABLE TERMINAL BLOCK KIT:
ADEMCO NO. 4142BLK

TRNSFMR: 1, 2
BELL OUTPUTS: 3, 4, 5, 6
AUX. RELAY: 7, 8, 9, 10
KEYPAD PORT #1: 11, 12, 13, 14
ZONE 1: 15, 16
ZONE 2: 17, 18
ZONE 3: 19, 20
ZONE 4: 21, 22
ZONE 5: 23, 24
ZONE 6: 25, 26
ZONE 7: 27, 28
ZONE 8: 29, 30

AC WIRING IS SUPERVISED

TRANSFORMER W/ENCLOSURE
ADEMCO No.1451 (supplied)
INPUT: 120VAC, 60HZ, 1.0A max. Connect to a dedicated circuit.
OUTPUT: 18VAC 72VA
OUTPUT: BL BL
INPUT: WH BLACK

BELL 1 + −: BELL, HORN, 2k (note 2)
BELL 2 + −: BELL, HORN, 2k
ALARM POLARITY SHOWN

N.O. POLE N.C.
AUX RELAY (FORM C) programmable response (not supervised) Contact Rating: 28V, 2.8A resistive loads

SPARE AUX POWR #1 + −
AUXILIARY POWER #1 Rating: 10 - 14VDC 1.0A MAX (STANDBY) 1.7A MAX (ALARM) See note 1. (not supervised)

Red Blk Grn Yel
Data in Data out
REMOTE KEYPADS: 6139, 6139R SEE NOTE 3

2-WIRE SMOKE DETECTOR LOOP: SMOKE, N.C., N.O., 2k (note 2)
2-WIRE SMOKE DETECTOR LOOP: SMOKE, N.C., N.O., 2k
N.C., N.O., 2k
N.C., N.O., 2k
PROGRAMMABLE AS TAMPER LOOP: N.C., N.O., 2k
PROGRAMMABLE AS KEY SWITCH LOOP: N.C., N.O., 2k
2-WIRE GLASS BREAK DETECTOR LOOP: GLASS BREAK, N.C., N.O., 2k

POLLING LOOP: 4209U, 4192SD SMOKE, 4208U

WARNING: TO PREVENT RISK OF ELECTRICAL SHOCK, DISCONNECT TELCO JACK BEFORE SERVICING THIS PANEL

EARTH GROUND
See instructions for proper earth ground connections

TO OTHER DEVICES
Polling Loop Ratings: (supervised) 128mA max. See note 1. See instructions for compatible devices and for max wire run length

NOTES

NOTE 1:
The combined standby current drawn from aux pwr #1, aux pwr #2 and polling loop cannot exceed 1.0A.The combined alarm current drawn from aux pwr #1, aux pwr #2, polling loop, bell 1 and bell 2 cannot exceed 2.3A.

NOTE 2:
2k EOLR is Ademco model 610-7

NOTE 3:
See instructions on setting addresses & for max # of keypads and wire run length restrictions. Keypad color subject to approval of local authority.

Each output may be selected for Style Y supervision or no supervision (See main PCB jumpers W1, W4 and program field 3*10)

FIRE CKTS: Supervise using 2k EOLR. Use polarized sounding devices.

BURG CKTS: Supervision not req'd. EOLRs not req'd. May use non polarized devices.

Ratings: 10 - 14VDC, 1.7A max. See note 1, see instructions for compatible devices.

For commercial fire, bell timeout must be a minimum of 6 minutes.

ALL CIRCUITS ARE POWER LIMITED EXCEPT THE OUTPUT OF THE 1451 TRANSFORMER

ZONE 1-8 NOTES
- All zones provide Style B supervision
- Zone resistance (excluding EOLR):
  - Zones 1, 2, 8: 100 ohms max
  - Other zones: 300 ohms max
- Zone response: 350 - 500mS (all zones)
- Ratings for zones 1,2:
  - 10 - 14VDC
  - 2mA max for smoke det. (up to 16 detectors of the type specified in the instructions can be used)
- UL compatibility ID: A

Do not mix fire and burg. sensors on one loop. N.C. contacts for burg. usage only.

The VISTA-128 Main Dialer Complies with FCC Rules, Part 68 FCC Reg. No.: AC398U-68192-AL-E Ringer Equivalence: 0.7B

VISTA-128FB
SUMMARY OF CONNECTIONS

ADEMCO GROUP

165 Eileen Way, Syosset, New York 11791

Copyright © 1998 PITTWAY CORPORATION

N8988V2 8/00