VISTA-120

Partitioned Security System with Scheduling

Installation and Setup Guide

CE

N5944-8V1 Rev. B 6/99

®ADEMCO

THANK YOU!

For Choosing Ademco's

Vista-120

TABLE OF CONTENTS

PART 1 HARDWARE INSTALLATION PROCEDURES..... 1

Section 1: GENERAL DESCRIPTION 2

Section 2: PLANNING A PARTITIONED SYSTEM 6
Theory of Partitioning 6
Setting up a Partitioned System 6
Common Area Logic 7
Master Keypad Setup and Operation 10

Section 3: FALSE ALARM REDUCTION FEATURES 11
Exit Error Logic 11
Exit Delay Reset 11
Cross Zoning 12
Call Waiting Defeat 12

Section 4: INSTALLING THE CONTROL 13
Mounting the Cabinet 13
Installing the Circuit Board 13
Standard Phone Line Connections 14
Connecting the AC Mains Transformer 14
Installing the Backup Battery 15

Section 5: INSTALLING THE KEYPADS 16
Keypads That May Be Used 16
Wiring to the Keypads 16
Using a Supplementary Power Supply 17
Mounting the Keypads 17
Addressing the Keypads/Preliminary Checkout 17

Section 6: BASIC WIRED ZONES 1-9 19
Common Characteristics of Wired Zones 19
Wiring Burglary and Panic Devices to • ones 1-8 19
Wiring 2-Wire Smoke Detectors to Zone 1 20
Compatible 2-Wire Smoke Detectors 20
Unsupervised Usage of Zone 1 21
Wiring 4-Wire Smoke Detectors to Zones 1-8 21
Compatible 4-Wire Smoke Detetors 22
Configuring Zone 7 for Alternate Keyswitch Function 22
Wiring 2-Wire Glassbreak Detectors to Zone 8 22
Compatible Glassbreak Detectors 22
Zone 9 Applications 23
Checkout Procedure for Wired Zones 23

Section 7: POLLING LOOP ZONES 10-128 24
Polling Loop Overview 24
Common Characteristics of Polling Loop Zones 24
Wiring/Addressing Polling Loop Devices 24
Polling Loop Limitations 25
Polling Loop Supervision 26
Maintenance Signal Support 27
Checkout Procedure for Polling Loop Zones 27
Compatible Polling Loop Devices 28

Section 8: WIRELESS (RF) ZONE EXPANSION 30
Common Characteristics of Wireless Zones 30
Wireless System Operation and Supervision 30
Wireless System Installation Advisories 31
Installation and Setup of 4281/5881 RF Receivers 31
Installation/Wiring of the 5800TM Module 32
House ID Sniffer Mode 32
5700 Series Transmitter Setup 33
Wireless Zone Assignments for 5700 Series Transmitters 33
Compatible 5700 Series Transmitters 35
5800 Series Transmitter Setup 36
Compatible 5800 Series Transmitters 37
Checkout Procedure for Wireless Zones 39

Section 9: RELAY OUTPUTS & POWERLINE CARRIER DEVICES 40
Output Device Basics 40
Wiring the 4204 Relay Module 40
Wiring the 4300 Transformer 41

Section 10: 4285 VISTA INTERACTIVE PHONE (VIP) MODULE 43
Mounting the 4285 VIP Module 43
Wiring the 4285 VIP Module 43

Section 11: AUDIO ALARM VERIFICATION (AAV) UNIT 46
AAV Module Operation 46
AAV Module Connections 47

Section 12: VIDEO ALARM VERIFICATION (VAV) UNIT 48

Section 13: VOLTAGE TRIGGERS (Connector J7) 49
Ground Start Trigger Setup 50
Open/Close Trigger Setup 50
Remote Keypad Sounder 50
Keyswitch Setup 51
Keyswitch by Partition Configuration 52
Auxiliary Alarm Signaling Equipment (Long Range Radio) 52

Section 14: EXTERNAL SOUNDERS 53

Section 15: EVENT LOG OPTIONS 54
Event Log Printer Connections 54
Event Logging Procedures 55
Event Log Printer and Display Codes 57

Section 16: FINAL POWER-UP PROCEDURE 58
Earth Ground Considerations 58
Connecting the Transformer 58
Connecting The Battery 59
Polling Loop Current Drain Worksheet 60
Auxiliary Device Current Drain Worksheet 60

Section 17: ACCESS CONTROL VIA ADEMCO PASSPOINT ACM 61

PART 2 PROGRAMMING THE SYSTEM 65

Section 18: THE MECHANICS OF PROGRAMMING 66
Using Data Field Programme Mode 66
System and Communication Defaults 66
Entering Data Field Programme Mode 66
Moving From One Page of Programming to Another 67
Viewing Data Fields 67
Entry Errors 67
Programming Systemwide Data fields 67
Programming Partition Specific Data Fields 68
#93 Menu Mode Programming 68

Section 19: ZONE INDEX & ZONE TYPE DEFINITIONS 69

Section 20: DATA FIELD DESCRIPTIONS 72

Section 21: #93 MENU MODE PROGRAMMING 88
#93 Main Menu Options 88
Zone Programming 90
Sequential Mode Programming 94
Report Code Programming 96
Programming Alpha Descriptors 99
Alpha Descriptor Vocabulary And Character (ASCII) Chart 102
Device Programming 103
Relay Programming 104
Programming Output Devices 105
Zone List Programming 107
Relay Voice Descriptors 108
Custom Word Vocabulary 109
Custom Word Substitutes for VIP Annunciation 109
RF Serial Number Clear Mode 110

Section 22: SCHEDULING OPTIONS 111
Introduction To Scheduling 111
Time Window Definitions 113
Open/Close Schedule Definitions 114
Programming with #80 Scheduling Menu Mode 115
Basic Scheduling Menu Structure 116
Time Window Definitions Worksheet 117
Programming Time Windows 118
Open/Close Worksheet 118
Programming Open/Close Schedules 119
Holiday Definitions & Schedule Worksheet 120
Programming Holiday Schedules 120
Time Driven Event Worksheet 122
Programming Time Driven Events 123
Limitation of Access by Time Worksheet 125
Programming Access Control Schedules 125
#81 Temporary Schedule Menu Mode 126
Programming Temporary Schedules 127
#83 User Scheduling Menu Mode 128

Section 23: SYSTEM COMMUNICATION 129
Reporting Formats 129
Loading Communication Defaults 132
Contact ID Event Codes 133
Communication Defaults 135

Section 24: DOWNLOADING 140
Getting On-Line with a Control Panel 140
On-Line Control Functions 141
Access Security 141
Connecting a 4100SM Module for Direct Wire Downloading 142

Section 25: SETTING THE REAL-TIME CLOCK 143

PART 3 SYSTEM OPERATION AND TESTING 144
Section 26: SECURITY ACCESS CODES 145
User Codes and Levels of Authority 145
To ADD, a Master, Manager or Operator Code 148
To CHANGE a Master, Manager, or Operator Code 150
Adding an RF Key to an Existing User 150
To DELETE a Master, Manager, or Operator Code 150
To EXIT the User Edit Mode 150

Section 27: KEYPAD FUNCTIONS 151
Arming Functions 151
Global Arming 152
Access Control 152
Delay Closing Time 153
Partition "GO TO" Command 153
Viewing Capabilities of a User 153
Viewing Zone Descriptors 153
Viewing Downloaded Messages 153
Using the Built-in User's Manual 153
Panic Keys 154
Speed Key [D] (Macros) 154
Manual Relay Activation Mode (#70) 155

Section 28: TESTING THE SYSTEM 156
Battery Test 156
Dialler Test 156
LCD Display Test 156
Burglary Walk Test 156
Armed Burglary System Test 157
Trouble Conditions 157
Turning the System Over to the User 158
To the Installer 158

REGULATORY AGENCY STATEMENTS 159

DIP SWITCH TABLES 160

SPECIFICATIONS 163

PROGRAMME FORM/SYSTEM WORKSHEET ..... Blue Insert

SUMMARY OF CONNECTIONS DIAGRAM ..... Inside Back Cover

LIST OF FIGURES

1. Installing The Lock 11
2. Mounting The PC Board 11
3. Standard Phone Line Connections 12
4. AC Power And Battery Connections 13
5. 4300 Transformer Connections 13
6. Keypad Connections to Keypad Port Terminals 14
7. Using a Supplementary Power Supply for Additional Keypads 15
8. Zones 1-9 Wiring Connections 16
9. Wiring 2-Wire Smoke Detectors to Zone 1 17
10. 4-Wire Smoke Detector Power Reset Using 4204 Relay Module 18
11. Wiring Latching Glassbreak Detectors to Zone 8 19
12. Polling Loop Connections 22
13. Polling Loop Extender Module Wiring 23
14. 5881 RF Receiver (showing receiver setup) 28
15. 4204 Module 36

16a. 4300 Transformer Connections 37
16b. XF10 Transformer Connections 37
16c. PSC04 Transformer Connections 37

17. 4285 Voice Module Connections 40
18. Audio Alarm Verification Module Connections 42
19. Connections to a Video Transmitter 43
20. J7 Connector For Voltage Triggers 44
21. Ground Start Module Connections 45
22. Remote Keypad Sounding Connections 46

23a. Remote Keyswitch Wiring 46
23b. Keyswitch by Partition Wiring Connections 47

24. Auxiliary Alarm Signaling Equipment 48
25. External Sounder Connections 49
26. AB12 Bell Box Wiring 49
27. Event Log Printer Connections 50
28. 1361 Transformer and Battery Connections 54

29a. 4300 Transformer Connections 54
29b. XF10 Transformer Connections 54

30. Wiring the VISTA Gateway Module 63
31. Direct Wire Downloading Connections (With 4100SM Module) 142

Summary Of Connections Diagram ..... Inside Back Cover

Conventions Used In This Manual

Before you begin using this manual, it is important that you understand the meaning of the following symbols (icons).

These notes include information that you should be aware of before continuing with the installation, and which, if not observed, could result in operational difficulties.

This symbol indicates a critical note that could seriously affect the operation of the system, or could cause damage to the system. Please read each warning carefully. This symbol also denotes warnings about physical harm to the installer.

```
Enter Zn Num.
(00 = Quit)          001
```

Many system options are programmed in an interactive mode by responding to Alpha keypad display prompts. These prompts are shown in a double-line box.

✳00

When programming the system, data fields are indicated by a “star” (✳) followed by the data field number.

PRODUCT MODEL NUMBERS: Unless noted otherwise, references to specific model numbers represent Ademco products.

PART 1

HARDWARE INSTALLATION PROCEDURES

SECTION 1

General Description

NOTE: This manual describes features of Vista-120 with software revision "WAVIS120-14." New features included in this version are indicated by margin lines.

The VISTA-120 is an 8-Partition alarm control panel that supports up to 128 zones using basic wired, polling loop, and wireless zones. In addition, the control offers relay control and scheduling capabilities for automating system functions. The major system features are outlined below.

New Features

This version of the VISTA-120 has enhanced features not found in the prior version. These enhancements include the following:

- Support for unique features of 5800EU supervised wireless system, including RF jamming detection and processing, activation of RF wireless siren, and more frequent supervision.
- Expansion of the number of programmable outputs from 32 relays (on 4204s) to 96 via polling loop support of up to 64 4101SN programmable relays and/or open collector outputs on 4208UXM Mk3 zone expander modules (4 per module).
- Integration of VISTA-120 with PassPoint Access Control System so that VISTA-120 status/users can influence/control PassPoint ACS and unused PassPoint zones can become part of VISTA-120's complement of protection zones.
- Self actuating siren/bell support
- Support for Final Contact Set arming mode
- Optional restrictions on downloading functions permitted when system is armed
- Optional use of zone 9 for Telephone Line Monitor output processing
- Optional restrictions on various keypad displays during the armed or disarmed modes for higher security applications.
- Support for faster (8x) processing of polling loop sensor zone faults for serial number address devices
- Expansion of the number of zone lists for use with programmable outputs from 8 to 15
- Optional limit on the number of zones that may be bypassed per partition
- Optional use of the printer port to transmit ASCII Contact ID messages to computer systems, communication networks, and other communication media
- Provision of a Contact ID data packet on the keypad bus for interface to communication networks and other communication media
- Support for future intelligent polling loop motion sensors that will send more data on the bus
- Support for Robofone version of Contact ID format
- Optional communication of verified intrusion alarm reports and provision of a unique output
- Support for the processing of high and low sensitivity maintenance signals from intelligent polling loop addressable smoke detectors
- Support for special Scandinavian required software features to permit insurance regulatory approvals
- Support for special telecom hardware/software capabilities for PTT approvals in Finland, Norway, Sweden, Netherlands, Belgium, France, and Australia.

Basic Wired Zones

Provides 9 basic wired zones:

- EOLR supervision (optional for zones 2-8) supporting N.O. or N.C. sensors
- Individually assignable to one of 8 partitions
- Up to 16 2-wire smoke detectors on zone 1
- 4-wire smoke or heat detectors on zones 1-8 (not permitted for UL installations)
- Up to 50 2-wire latching glassbreak detectors on zone 8

Polling Loop Expansion:

Supports up to 119 additional wired zones using a built-in polling (multiplex) loop interface. Current drain can total up to 128mA. Polling loop zones have the following characteristics:

- Must use RPM (Remote Point Module) devices
- Supervised by control panel
- Individually assignable to one of 8 partitions

Wireless Expansion:

Supports up to 63 wireless zones using 4281 type RF Receiver or 128 wireless zones using 5881/5882EU type RF Receiver (less if using basic wired and/or polling loop zones). Wireless zones have the following characteristics:

- Supervised by control panel for check-in signals (except certain non-supervised transmitters)
- Supervised for low battery condition
- Cover removal tamper protection for 5800/5800EU series supervised transmitters
- Wall removal tamper protection for 5800EU series supervised transmitters
- Individually assignable to one of 8 partitions

For specific information regarding number of wireless zones supported by each RF receiver, see the section on ***Wireless Expansion*** later in this manual.

Pass Point Access Control System (ACS)

If the PassPoint ACS has uncommitted zones, up to 32 of these zones can be used as if they were basic wired zones, as long as they are within VISTA-120's total capacity of 128 protection zones.

Supervisory Zones

Provides additional zones for supervision of the following:

J7 Trigger Outputs	Zone 973
RF Receivers	Zones 988, 990
Polling Loop	Zone 997

Peripheral Devices

Supports up to 32 addressable devices, which can be any combination of 6139/5839EU keypads, RF receivers (4281/5881/5882EU), relay modules (4204), and the 4285 VIP module. Peripheral Devices have the following characteristics:

- Terminated at the Keypad Port terminals on the control panel (except for wireless 5839EU)
- Each device set to an individual address (physically) according to the device's instructions
- Each device enabled in the system using the *Device Programming Mode*

Optional Vista Interactive Phone Module

Supports the Ademco 4285 VIP Module, which permits access to the security system by telephone to do the following:

- Obtain system status information
- Arm and disarm security system
- Control relays and/or Powerline Carrier devices

8 Partitions

Provides the ability to control 8 separate areas independently, each functioning as if it had its own separate control. Partitioning features include:

- Up to 3 "Common Area" partitions, which arm automatically when the last partition (1-8) that shares the common area is armed and disarms when the first partition (1-8) that shares the common area is disarmed
- A Master Partition (9) to which keypads may be assigned to view the status of all 8 partitions at the same time
- Keypads assignable to one of 8 partitions or to Master Partition 9 to view system status
- Ability to assign Relays/Powerline Carrier devices to one or all 8 partitions
- Certain system options selectable for each partition, such as Entry/Exit Delay and Subscriber Account Number

User Codes

Accommodates 150 user codes, all of which can operate any or all partitions. Each user, if assigned to more than one partition, retains the same user number across all partitions, and will only utilise one user "slot" in the system. Certain characteristics must be assigned to each user code as follows:

- Authority level for each partition (Master, Manager, or several other Operator levels)
- Opening/Closing central station reporting option
- What partitions the code can operate
- Global arming capability (arm and disarm all partitions the code has access to in one command)
- Use of a wireless transmitter to arm and disarm the system (wireless transmitter must first be "enrolled" into the system

Keypad Panic Keys

Accommodates three keypad panic keys: 1+✳ (A), ✳+# (B), and 3+# (C).

- Designated as zones 995 (1+✳), 996 (3+#), and 999 (✳+#)
- Activated by wired and wireless keypads
- Activated and reported separately by partition, distinguished by Subscriber Acct. No. (or Partition No. if Contact ID reporting is used)

Keypad Macros

Accommodates up to 4 keypad macro commands per partition (each macro is a series of keypad commands), which can be assigned to the A, B, C and D keys on each partition's keypads.

This means, for example, that by pressing the "D" key, the system can be programmed to log onto another partition, bypass zones 2 and 3, and arm that partition in the AWAY mode (explained in detail later in this manual). Each macro can be up to 32 characters in length.

Optional Output Devices (4204 Relays and Powerline Carrier [i.e., X-10] Devices)

Accommodates the use of 32 output devices, which can be a combination of ADEMCO's 4204 Relay Modules or Powerline Carrier Devices (i.e., X-10), and up to 64 polling loop trigger outputs (4 per 4208UXM MK3) or relay outputs (1 per 4101). Each 4204 module provides four "Form C" relays for general purpose use.

Powerline Carrier Devices are controlled by signals sent through the electrical wiring at the premises via a 4300 transformer or other appropriate modulator (e.g. XM10E in Europe; XF10 in Australia). Therefore, if using Powerline Carrier Devices, a 4300 (110V) or XF10 (220V) transformer must be used in place of the regular system transformer (plug-pack) in the markets using those devices. Elsewhere, the power transformer and the line carrier modulator are separate (Europe/XM10E).

Output devices have the following characteristics:

- Can activate in response to system events
- Can activate using time intervals
- Can be activated manually using the #70 relay command mode
- Can each have an alpha descriptor assigned to it
- Can be activated remotely from the PC downloader during the download session

Access Control

VISTA-120 supports the capability with Ademco's PassPoint Access Control System (ACS). PassPoint ACS processes card reader information and controls the locking and unlocking of doors. PassPoint also has input zones and output relays/triggers. VISTA-120 can incorporate uncommitted ACS zones as part of its security system and can control uncommitted ACS relays as if they were part of its own relay group. VISTA-120 arming stations--wired and wireless keypads and RF keys and zones--can be used to control doors in the ACS. Conversely, PassPoint access cards can control relays, triggers, and X-10 AC mains signalled devices in the VISTA-120 system. The arming status of VISTA-120 partitions can control access through doors in the PassPoint ACS.

If programmed and PassPoint is not used, VISTA-120 provides users with a command which activates a relay for two seconds to open access doors (e.g. area door). Each partition can be assigned one access control relay.

Optional Keyswitch

Supports the Ademco 4146 keyswitch on any one of the system's 8 partitions. If used, zone 7 is no longer available as a protection zone.

In addition, supports **one** keyswitch per partition via use of a serial number multiplex RPM (i.e. 4193SN) with a double pole switch (key removable in both the arm and disarm positions).

Voltage Triggers

Provides a trigger connector whose pins change state for different conditions. Used with Long Range Radio transmitters or other devices such as a voice dialler, a derived channel STU, a remote keypad sounder, keyswitch Armed and Ready LEDs.

Event Log

Keeps a log of different event types (enabled in programming) up to a total of 224 events.

- Can be viewed at the keypad or through the use of V-Link upload software
- Can be printed on a serial printer using a 4100SM module as an interface to the control.

Scheduling

- Open/Close schedules (for control of arming/disarming and reporting)
- Holiday schedules (allows different time windows for Open/Close schedules)
- Timed Events (activate relays, auto-bypass/unbypass, auto-arm/disarm, etc.)
- Access schedules (for limiting system access to users by time and/or day)
- End User Output Programming mode (provides 20 timers for relay control)

Audio Alarm Verification Option

Provides a programmable Audio Alarm Verification (AAV) option which can be used in conjunction with an output relay to permit voice dialogue between an operator at the central station and a person at the protected premises.

- Requires the use of an optional AAV unit, such as Eagle model 1250
- If used, Zone 5 is no longer available as a protection zone

Video Alarm Verification Option

Provides a programmable Video Alarm Verification (VAV) option which can be used in conjunction with an output relay to permit video imagery of the protected premises using standard telephone lines.

- Requires the use of a Video Transmitter and associated Video Receiver.

Cross-Zoning Capability

Helps prevent false alarms by preventing a zone from going into alarm unless its linked zone is also faulted within five minutes.

Exit Error False Alarm Prevention Feature

- System can tell the difference between a regular alarm and an alarm caused by leaving an Entry/Exit door open. If not subsequently disarmed, faulted E/E zone(s) will be bypassed and the system will arm
- Generates an "Exit Error" report by user and by zone so the Central Station knows it was an exit alarm and who caused it

Communication Formats

Supports the following formats for the Primary and Secondary Central Station receivers:

- Ademco Low Speed (Standard or Expanded)
- Sescoa/Radionics
- Ademco Express
- Ademco Expanded High Speed
- Ademco Contact ID

PSTN (Public Switched Telephone Network) Compatibility

The initial release VISTA-120 is suitable for use in many national telephone systems around the world, but the latest versions of VISTA-120 have specifically designed hardware and software capabilities to meet the PSTN regulation requirements of Norway, Sweden, Finland, Netherlands, Belgium, and Australia.

Alternative Communications Media Capabilities

- Contact ID messages appear in a special keypad bus data packet that can be extracted by Long Range Radio transmitters, CATV modems and various network interface devices designed to access them.
- Contact ID messages can optionally be transmitted in ASCII through the printer output for RS232C interface to host computers and various network interface devices.

Built-in User's Manual and Descriptor Review

Contains a built-in Users Manual and Descriptor Review mode.

- By pressing and holding any of the keypad function keys for 5 seconds, a brief explanation of that particular function scrolls across the alpha-numeric display.
- By pressing and holding the READY key for 5 seconds and then releasing it, all programmed zone descriptors can be displayed (one at a time). This serves as a check for installers to be sure all descriptors are entered properly.

Improved Downloading Speed

Uploads and downloads at 300 baud (predecessor control rate is 75 baud), making upload/download speed approximately four times faster.

SECTION 2

Planning A Partitioned System

This section provides the following information:

- Theory of partitioning
- Setting up a partitioned system
- Common Area Logic
- Master keypad setup and operation

Theory of Partitioning

This system provides the ability to arm and disarm up to 8 different areas, each as if it had its own control. These areas are called partitions. Partitions are used when the user desires to disarm certain areas while leaving other areas armed, or to limit access to certain areas to specific individuals. Each user of the system can be assigned to operate any or all partitions, and can be given a different authority level in each.

Facts you need to know about partitioning:

First, you must determine how many partitions are required (1-8). This must be done before anything can be assigned to those partitions.

Keypads

Each keypad must be given a unique "address" and assigned to one partition (can also be assigned to Partition 9 if "Master" keypad operation is desired--see *Master Keypad Setup and Operation* later in this section).

Zones

Each zone must be assigned to one partition.

The zones assigned to a partition will be displayed on that partition's keypad(s).

Users

Each user can be assigned to one or more partitions. If a user is to operate more than one partition and would like to arm/disarm all or some of those partitions with a single command, the user must be enabled for "Global Arming" for those partitions (when entering user codes).

A user with access to more than one partition (multiple access) can "log on" to one partition from another partition's keypad, provided that programme field 2*18: ENABLE GOTO is enabled for each partition you want to log on to from another.

Up to 3 partitions can be selected as "common area" partitions, and other partitions can affect these partitions by causing arming/disarming of these partitions to be automated (see *Common Area Logic*, later in this section).

Setting Up a Partitioned System

The basic steps to setting up a partitioned system are described below. If you need more information on how to programme the prescribed options, see *THE MECHANICS OF PROGRAMMING* section, as well as each corresponding section's programming procedure.

1. Determine how many partitions the system will consist of (programmed in field 2*00).
2. Assign keypads to partitions (#93 Device Programming mode).
3. Assign zones to partitions (#93 Zone Programming mode).
4. Confirm zones are displayed at the keypad(s) assigned to those partitions.
5. Assign users to partitions.
6. Enable the GOTO feature (programme field 2*18) for each partition a multiple-access user can "log on" to (alpha keypad only).
7. Programme Partition-Specific fields (see *DATA FIELD DESCRIPTIONS* section).

Common Area Logic

When an installation consists of one or more partitions shared by users of other partitions in a building, those shared partitions may be assigned as the "common area" partitions for the system (programme fields 1*11, 1*14, 1*17). An example of this might be in a medical building where there are two doctor's offices and a common entrance area (see example that follows explanation).

This option employs logic for automatic arming and disarming of the common area. Programming fields affect the way the common area will react relative to the status of other partitions. They are: 1*12, 1*15, 1*18 (Affects Common Area) and 1*13, 1*16, 1*19 (Arms Area).

1*12, 1*15, 1*18 Affects Common Area (must be programmed by partition)

Setting this option to 1 for a specific partition causes that partition to affect the operation of the common area as follows:

a. When the first partition that affects the common area is disarmed, the common area will also be disarmed.
b. The common area cannot be armed unless every partition selected to affect the common area is armed.
c. Arming the last partition that affects the common area ***will not*** automatically attempt to arm the common area.

1*13, 1*16, 1*19 Arms Common Area (must be programmed by partition)

Setting this option to 1 for a specific partition causes that partition to affect the operation of the common area as follows:

a. When the first partition that affects the common area is disarmed, the common area will also be disarmed.
b. The common area cannot be armed unless every partition selected to affect the common area is armed.
c. Arming the last partition that is programmed to arm the common area will automatically attempt to arm the common area. If any faults exist in the common area partition, or another partition that affects the common area is disarmed, the common area cannot be armed, and the message "UNABLE TO ARM LOBBY PARTITION" will be displayed.

You cannot select a partition to "arm" the common area unless it has first been selected to "affect" the common area. Enable field 1*12, 1*15, 1*18 before enabling field 1*13, 1*16, 1*19 respectively.

The following chart summarizes how the common area partition will operate if different options are set for another partition in fields 1*18 and 1*19.

1*12, 1*15,1*18 Affects common Area	1*13, 1*16,1*19 Arms common Area	Disarms when partition disarms?	Attempts to arm when partition arms?	Can be armed if other partitions disarmed?
0	0	NO	NO	YES
1	0	YES	NO	NO
1	1	YES	YES	NO
0	1	---ENTRY NOT ALLOWED---		

Example

Here is an example of how the area would react in a typical setup.

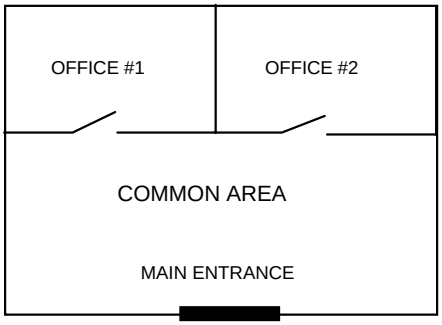

User #1 has access to Office #1 and the Common Area.
User #2 has access to Office #2 and the Common Area.

Office #1 is set up to affect the Common Area, but not arm it.
Office #2 is set up to affect and arm the Common Area.

For the purpose of this example, the ( ) indicate the current status of the other partition when the user takes action.

Sequence #1:

	Office 1	Office 2	Common Area Action
User #1:	Disarms	(Armed)	Disarms
User #2:	(Disarmed)	Disarms	No Change
User #1:	Arms	(Disarmed)	No change
User #2:	(Armed)	Arms	Arms

Sequence #2:

	Office 1	Office 2	Common Area Action
User #2:	(Armed)	Disarms	Disarms
User #1:	Disarms	(Disarmed)	(No change)
User #2:	(Disarmed)	Arms	No Change
User #1:	Arms	(Armed)	No Change

Notice that in sequence #1, since Office #2 was the last to arm, the common area also armed (Office #2 is programmed to affect *and* arm the common area). In sequence #2, the common area could not arm when Office #2 armed, because Office #1, which affects the common area, was still disarmed.

When Office #1 armed, the common area still did not arm because Office #1 was not programmed to arm the common area. User #1 would have to arm the common area manually. Therefore, you would want to programme a partition to affect *and* arm the common area, if the users of that partition are expected to be the "last out" of the building.

Common Area Programming Requirements

The following should be considered when assigning common areas.

1. Common areas must be defined in ascending numerical order. That is, the common area containing the lowest partition number should be defined as common area 1 (ex. Do not define partition 8 as common area 1 and partition 1 as common area 2).
2. Common area 1 must be defined before defining common area 2, and common area 2 must be defined before defining common area 3.
3. A common area cannot be designated as an "affecting" and/or "arming" partition of another common area.
4. A partition not defined as a common area can be designated as an "affecting" and/or "arming" partition for more than one common area. If designated as an "arming" partition, it must also be an " affecting" partition

How User Access Codes Affect the Common Area

Codes with "Global" Arming

If a code is given "global arming" when it is defined (see Section 24: *SECURITY ACCESS CODES*), the keypad will ask "Arm all?" or "Disarm all?" whenever the user tries to arm or disarm the partitions he has access to from a keypad. This allows the user to pick and choose the partitions to be armed or disarmed, and so eliminates the "automatic" operation of the common area. Keep in mind, however, that if attempting to arm all, and another "affecting" partition is disarmed, the user will not be able to arm the common area, and the message "UNABLE TO ARM COMMON AREA PART" will be displayed.

Codes with "Non-Global" Arming

If arming with a non-global code, the common area partition operation will be automatic, as described by fields 1*12, 1*15, 1*18 and 1*13, 1*16, 1*19.

Other Methods of Arming/Disarming

When arming or disarming a partition that affects and/or arms the common area in one of the following manners, common area logic remains active:

- Quick-Arm
- Keyswitch
- Wireless Button
- Wireless Keypad

Arming/Disarming Remotely

If arming or disarming remotely (through V-LINK downloading software), the common area will not automatically follow another partition that is programmed to arm or disarm the common area. The common area must be armed separately, after arming all affecting partitions first.

Auto-Arming/Disarming

If scheduling is used to automatically arm and/or disarm partitions, the common area partition will not automatically follow another partition that is programmed to arm or disarm the common area. The common area must be included as a partition to be armed/disarmed.

If using auto-arming, make sure that the **Auto-arm Delay** and **Auto-arm Warning** periods (fields 2*05 and 2*06) combined are longer than that of any other partition that affects the common area. This will cause the common area to arm last.

Master Keypad Setup and Operation

Although this system has eight actual partitions, it provides an extra partition strictly for the purpose of assigning keypads as "Master" keypads for the system.

Any keypad assigned to Partition 9 in #93 Device Programming mode will become a "Master" keypad. A Master keypad reflects the status of the entire system (Partitions 1-8) on its display at one time. This is useful because it eliminates the need for a security officer in a building to have to "log-on" to various partitions from one partition's keypad to find out where an alarm has occurred.

The following is an example of a typical display:

```
SYSTEM 1 2 3 4 5 6 7 8
STATUS R R N N A ✳ B A
```

Possible status indications include:

A = Armed Away	M =	Armed Maximum
S = Armed Stay	I =	Armed Instant
R = Ready	N =	Not Ready
B = Bypassed/Ready	✳ =	Alarm Memory/Trouble present

To obtain more information regarding a particular partition, enter ✳ + [Partition No.] (i.e., ✳4). In order to affect that partition, the user must use a code that has access to that partition. Also, in order for a user of any partition to log onto Partition 9 to view the status of *all* partitions, that user must have access to all partitions. Otherwise, access will be denied.

The following is an example of what would be displayed for a fault condition on Zone 2 (Loading Dock Window) on Partition 1 (Warehouse) when logging on from a keypad in Partition 9:

```
WHSE  DISARMED
KEY ✳ FOR FAULTS
```

This is the normal display that appears at Partition 1's keypad(s). Pressing [✳] will display:

```
FAULT  002   LOADING
DOCK  WINDOW
```

Additional zone faults will be displayed one at a time. To display a new partition's status, press [✳] + [Partition No.]. This will display the status of the new partition.

The "Armed" LED on a Master keypad will be lit only if *all* partitions have been armed successfully. The "Ready" LED will be lit only if *all* partitions that are disarmed are "ready to arm." Neither LED will be lit if only some partitions are armed and only some disarmed partitions are "ready."

The sounder on a Master keypad will reflect the sound of the most critical condition on all of the partitions. The priority of the sounds is as follows:

A. Pulsing fire alarm sounds
B. Steady burglar alarm sounds
C. Trouble sounds (rapid beeping)

The sounder may be silenced by pressing any key on the Master keypad or a keypad in the partition where the condition exists.

A Master keypad uses the same panics as Partition 1. Master keypad panics are sent to Partition 1, and will activate in Partition 1. Therefore, panics must be programmed for Partition 1.

SECTION 3

False Alarm Reduction Features

This section provides the following information:

- General information about false alarms
- Exit Error Logic and related reports
- Exit Delay Reset
- Cross-Zoning
- Call Waiting Defeat

General Information

This control supports features which help minimize false alarms from occurring. Most false alarms occur either upon exiting the premises, or because of a zone which tends to go into alarm either due to environmental factors, or because the zone's resistance to the control may be on the edge of acceptability. We call this condition an "intermittent sensor."

Features which prevent false alarms due to these circumstances are:

- Autobypass Logic and related reports
- Exit Delay Reset
- Cross-Zoning

Autobypass Logic

This feature is intended to reduce the incidence of false alarms due to exit doors that are left open after the exit delay has expired. If this feature is enabled in programme field 1*20, the following will occur:

At the end of the exit delay, if a door is left open or an interior zone is faulted, the system will start the entry delay period, and will sound the bell(s),siren(s) and keypad sounders for the duration of entry delay. This gives the user time to re-enter the premises and disarm the system before autobypass occurs. If field *07 is enabled, the faulted zone(s) are autobypassed at the end of exit delay (no entry delay is activated).
If the user does not re-enter the premises and disarm the system, the system will bypass the faulted entry/exit and/or interior zone(s). The rest of the system will be armed. In addition, the following dialler reports will be sent to the central station if programmed:

- Autobypass by User (not sent if using ADEMCO High Speed format
- Autobypass by Zone (Sent as regular alarm if using ADEMCO High Speed format)
- Bypass reports

NOTE: If field *07 is enabled **and** field 1*20 is **not** enabled, then faults remaining in the exit route at the end of the exit delay will cause an immediate alarm.

Another report, designed to notify the central station that an alarm has occurred within five minutes of arming, is called the **Recent Close** report. This report, as well as the autobypass reports, are programmed in data fields 1*40 and 1*41.

Exit Delay Reset

This feature is designed to allow an operator to re-enter the premises to retrieve a forgotten item without triggering an alarm. This feature is enabled in programme field 1*21, and works in the following way:

When the panel is armed, the normal exit delay begins. After the user exits, and the door closes, the exit delay time is reset to 60 seconds. If, within this 60 second period, the entry door is re-opened, the panel will restart the exit delay sequence again using the programmed exit delay time. This feature will only be activated once after arming.

Cross-Zoning

The Cross-Zoning feature is designed so that a combination of two zones must be faulted within a five minute period to cause an alarm on either zone. This prevents momentary faults from causing an alarm condition. You can select four pairs of cross zones, keeping in mind the following:

- Both linked zones must protect the same area
- Both linked zones must be in the same partition
- A Fire zone must only be linked to another fire zone protecting the same physical area (see note below)

The four pairs of cross-zones are programmed in data fields 1*22, 1*23, 1*24, and 1*25.

DO NOT cross-zone a fire zone with a burglary zone under any circumstance. A fire zone must only be linked to another fire zone and BOTH must be protecting the same physical area (no walls or partitions separating them). As a guideline, we recommend that spacing between fire cross-zones be no further than 9m.

Conditions That Affect Cross-Zone Operation

1. In the event of a continuous fault on one of the linked zones that lasts longer than five minutes, a fault on the second zone will cause an alarm immediately.
2. If one of the zones in a pair is bypassed or has a zone response type set to 0, the cross-zoning feature will not apply,
3. If an Entry/Exit zone is linked with an Interior Follower zone, be sure to enter the Entry/Exit zone as the first zone of the pair. This will ensure that the entry delay time is started before the follower zone is processed.
4 a. If a relay is programmed to activate on a fault of one of the zones, the relay will activate without the other zone being faulted.
   b. If a relay is programmed to activate on either an alarm or trouble, both zones must trip before the relay will activate, and both zones must restore for the relay to deactivate (if relay is programmed to deactivate on a Zone List Restore).

Call Waiting Defeat Logic

Although this option does not directly prevent false alarms, it may prevent the central station from taking action on a potential false alarm. After the panel's initial call to report the alarm, if the panel attempts to make an additional call, perhaps for a cancel or a zone restoral, an operator at the central station attempting to contact the premises to verify whether or not the alarm is valid will hear the phone ringing indefinitely and will have to dispatch on the call if call waiting is not defeated.

This option, enabled in programme field 1*42, will attempt to defeat call waiting on the first out-going call attempt to both the primary and secondary numbers. It does this by dialing a special sequence preceding the phone number (but after the PABX number). The panel will dial *70 if using TouchTone multifrequencies and 1170 if using rotary decadic dial pulses.

The panel does not attempt to defeat call waiting on each call attempt, since the phone company may not complete the call if the sequence is dialed on a phone line that does not have call waiting.

SECTION 4

Installing the Control

This section provides installation instructions for the following:

- Mounting the control cabinet
- Installing the cabinet lock (if used)
- Installing the main circuit board
- Standard phone line connections
- Connecting the AC transformer
- Installing the backup battery in the cabinet
- Making earth ground connections

Mounting the Cabinet

- Mount the control cabinet to a sturdy wall using fasteners or anchors (not supplied) in a clean, dry area which is not readily accessible to the general public. The back of the control cabinet has 4 holes for this purpose.
- Before mounting the circuit board, remove the metal knockouts for the wiring entry that you will be using. DO NOT ATTEMPT TO REMOVE THE KNOCKOUTS AFTER THE CIRCUIT BOARD HAS BEEN INSTALLED.

Installing The Cabinet Lock

1. Remove the lock knockout on the control cabinet cover. Insert the key into the lock. Position the lock in the hole making certain that the latch will make contact with the latch bracket when the door is closed.
2. While holding the lock steady, insert the retainer clip into the retainer slots.

Use an Ademco No. N6277 Cam Lock and No. N6277-1 Push-On Retainer Clip (supplied).

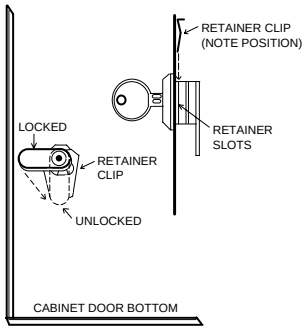

Figure 1. Installing The Lock

Installing the Control's Circuit Board

Refer to the Mounting the PC Board diagram.

- Hang the three mounting clips on the raised cabinet tabs. Make sure the clip orientation is exactly as shown in the diagram to avoid damage to the clip when mounting screws are tightened. This will also avoid problems with insertion and removal of the PC board.
- Insert the top of the circuit board into the slots at the top of the cabinet. Make certain that the board rests in the slots as indicated in step 2 detail.
- Swing the base of the board into the mounting clips and secure the board to the cabinet with the accompanying screws (as illustrated in the diagram).

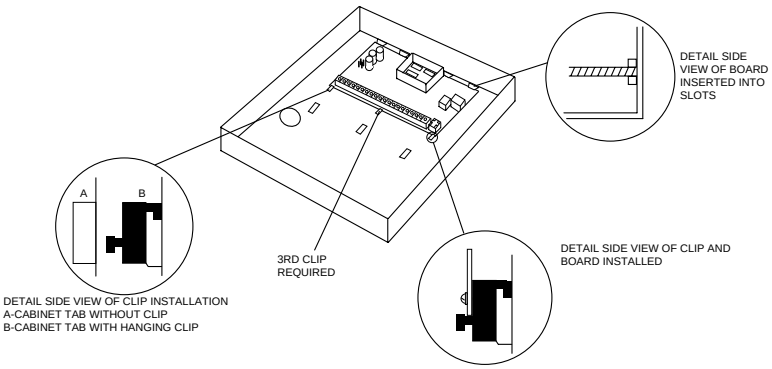

Figure 2. Mounting The PC Board

Make certain that the mounting screws are tight. This insures that there is a good ground connection between the PC board and the cabinet. Also, dress field wiring away from the microprocessor (center) section of the PC board. Use the 2 loops on the left and right sidewalls of the cabinet for anchoring field wiring using tie wraps. These steps are important to minimizing the risk of panel RF interference with television reception.

Standard Phone Line Connections

1. Connect the incoming phone line and handset wiring to the main terminal block as follows (see Standard Telephone Line Connections diagram) :

   (Does not pertain to Australia)

   TB1-26: Local Handset (TIP)
   TB1-27: Local Handset (RING)
   TB1-28: Incoming Phone Line (TIP)
   TB1-29: Incoming Phone Line (RING)
2. In Australia, plug the phone cord into the jack on the control's PCB.
3. If you want to connect the panel to phone lines that require ground start capability, then a 675 Ground Start Module must be used. This module is triggered by one of the outputs on the connector labeled J7 (see *VOLTAGE TRIGGERS* section).

To prevent the risk of shock, disconnect phone lines at telco jack before servicing the panel.

PABX

- If the communicator is connected to a telephone line inside a PABX, be sure the PABX has a back-up power supply that can support the PABX for 24 hours. Many PABXs **are not** power backed up and connection to such a PABX will result in a communication failure if power is lost.

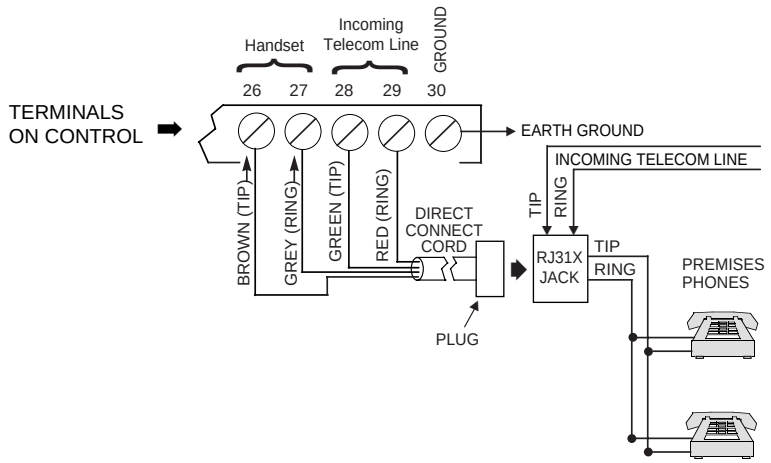

Figure 3. Standard Telephone Line Connections

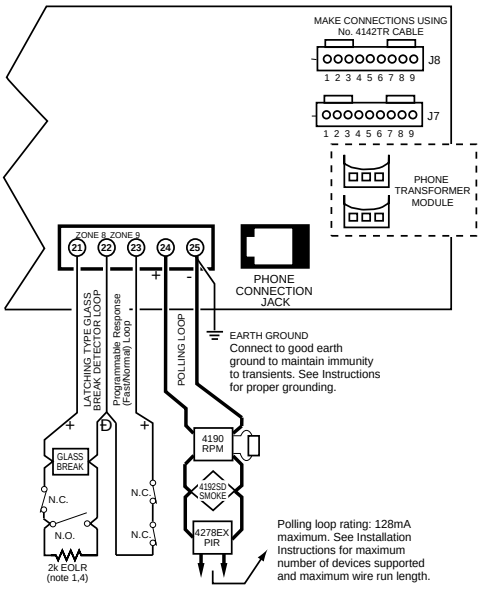

Australian Phone Connections

Connecting the AC Mains Transformer

1361: Wire a 1361 110VAC transformer (not supplied) to terminals 1 and 2 on the control panel (before connecting the battery) as shown in the AC Power and Battery Connections diagram. See wiring table below for wire size to use. In 220VAC regions, use a 16.5VAC/40VA output transformer.

Do not connect the transformer to the AC mains until you are instructed to do so. Refer to the *FINAL POWER-UP PROCEDURE* section for information regarding proper Earth Ground connections.

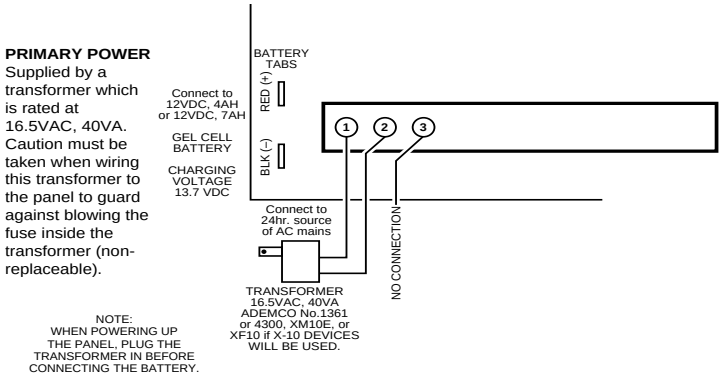

Figure 4: AC Power And Battery Connections

The complete wiring for the 4300/XF10 transformer is also covered in the *RELAY OUTPUTS & POWERLINE CARRIER DEVICES* section.

4300: If using 110VAC/60Hz (see page 37 for 220VAC connection) Powerline Carrier devices, the 4300 transformer interface must be used ***instead*** of the regular 1361 transformer. The 4300 supplies the control panel with AC, and also sends control pulses through the premises electrical system to control the Powerline Carrier devices. In Australia, use the XF10 and in Europe, use the XM10E in addition to the normal 16.5VAC/40VA output transformer. See Final Power Up section.

1. Connect terminals 1 and 3 (AC) and terminal 2 (Ground) of the 4300 transformer interface to control panel terminals 1, 2, and 30, respectively.
2. Run a 6-conductor cable between the 4300 and the panel. Splice this cable to a 4142TR cable as shown below. Note that the white and yellow wires of the 4142TR **must be spliced** together.

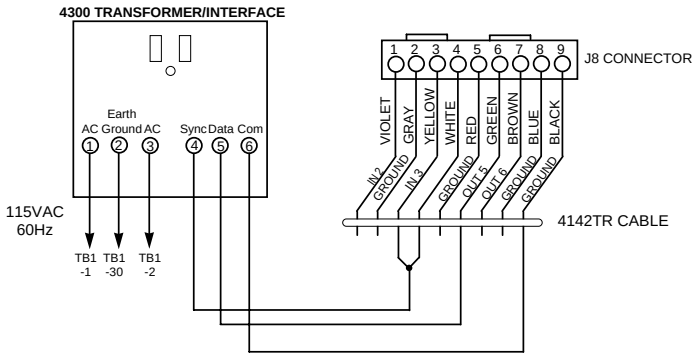

Figure 5: 4300 Transformer Connections

Do not connect the transformer to AC mains until you are instructed to do so later in the manual.

Installing The Back-Up Battery

If necessary, refer to the *FINAL POWER-UP PROCEDURE* section for information regarding battery size to use, etc.

Do not attach the connector cable to the battery terminals until you are instructed to do so later in the manual.

1. Place the 12-volt back-up battery in the control cabinet.
2. Attach Red and Black wires on the battery connector cable as follows:
   a. Red to the positive (+) battery terminal **on the control board** (see diagram above or the Summary of Connections Diagram for location).
   b. Black to the negative (–) battery terminal **on the control board.**

NOTE: A dual battery harness is supplied that allows two batteries to be wired in parallel for increased capacity.

SECTION 5

Installing the Keypads

This section provides the following information:

- A list of keypads that may be used
- Instructions for wiring and mounting the wired keypads
- Instructions for addressing the keypads
- A preliminary check-out procedure to ensure that the keypads are functioning properly in the system

Keypads That May Be Used

- Two Line Alpha Display wired 6139, 6139AV and wireless 5839EU
- Up to 32 addressable devices, including keypads, may be used in the system, as long as the auxiliary current is available (you may need to use an auxiliary power supply if the 750mA auxiliary output is exceeded)

Wiring To The Keypads

1. Determine wire size by referring to the wiring length/size chart below.
2. Wire keypads to a single wire run or connect individual keypads to separate wire runs. The maximum wire run length from the control to a single keypad which is wired back to the control must not exceed the lengths listed in the table.**Wire Run Length Table**

Wire Size	Length
0.64 mm	137 m
0.81 mm	213 m
1.0 mm	335 m
1.3 mm	533 m

A. The length of all wire runs combined must not exceed 610 metres when unshielded quad conductor cable is used (305 metres if shielded cable used.)
B. If more than one keypad is wired to a run, then the above maximum lengths must be divided by the number of keypads on the run (i.e. the maximum length would be 69 metres if two keypads are wired using 0.64 mm diameter wire).

For keypads connected to a single 4-wire run, determine the current used by all units connected to the single wire run, then refer to the Wiring Run chart to determine the maximum wire length that can be safely used for each wire size. Current drain for all devices can be found in the *SPECIFICATIONS AND ACCESSORIES* section.

3. Run field wiring from the control to the keypads (using standard 4-conductor twisted wire cable using the wire size determined in step 1).
4. Connect keypads to the Keypad Port terminals 6, 7, 8, and 9 on the control board, as shown below.

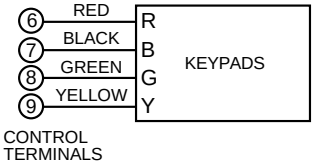

Figure 6. Keypad Connections To the Keypad Port terminals.

Using a Supplementary Power Supply to Power Additional Keypads

The control provides 750mA of auxiliary standby power for powering keypads and other devices from the auxiliary power output. Aside from this, the control can support up to 32 peripheral devices (keypads, RF receivers, relay modules, etc.). The backup battery will supply power to these devices in the event that AC power is lost. When the control's auxiliary power load for all devices exceeds 750mA, you can power additional keypads from a regulated, 12VDC power supply (e.g., AD12612). The AD12612 power supplies have a backup battery which can power these keypads in the event of AC mains power loss.

Keypads powered from supplies which do not have a backup battery **will not function** when AC mains is lost. Therefore, be sure to power at least one keypad from the Control's auxiliary power output.

Connect additional keypads as shown below using the keypad wire colours shown. Be sure to observe the current ratings for the power supply used.

A. Make connections directly to the screw terminals as shown. Make no connection to the keypad blue wire (if present).
B. Be sure to connect the negative (–) terminal on the Power Supply unit to terminal 7 (AUX –) on the control.

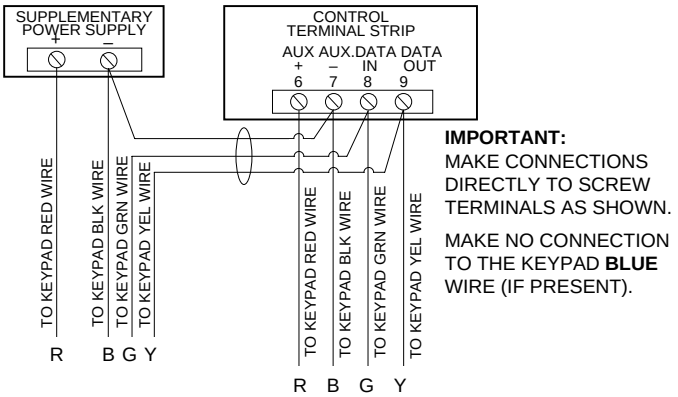

Figure 7: Using A Supplementary Power Supply For Keypads

Mounting the Keypads

1. **Mount the keypads** at a height that is convenient for the user. Refer to the instructions provided with the keypad for mounting procedure.You can either surface mount or flush mount keypads (using an appropriate Trim Ring Kit: 6139TRK). Refer to the mounting instructions and template included with the keypad and/or trim ring kit for specific information.

Addressing the Keypads/Preliminary Check-out Procedure

If you want to check that the system is working before connecting field wiring from zones and devices, do the following:

1. Temporarily connect a 2000 ohm end-of-line resistor across each of the basic wired zones 1–8, as shown in the Summary of Connections diagram. Connect a jumper across the zone 9 terminals. Without actual zone wiring or EOL resistors connected, the keypads will not display the "Ready" message.
2. Power up the system temporarily by connecting the AC mains.

The keypads will not operate until they are assigned an address and enabled in the system's Device Programming Mode.

3. Set each keypad to an individual address (00-30) according to the keypad's instructions. Set one alpha keypad for address "00" and other keypads for higher addresses (01, 02, and 03 are enabled in the system's default programme). Any keypads set for address 04 and above will appear blank until they are enabled in the system's programme.

Keypads set to the non-addressable mode (address 31) may interfere with other keypads (as well as other devices) connected to the keypad terminals.

4. After addresses are set, the green “READY” LED should light, and the words DISARMED...READY TO ARM should be displayed on keypads set to addresses 00, 01, 02, and 03.

   If the “Ready” display does not appear on any of the keypads in the system (in either of the partitions), or a “Not Ready” message is displayed, check the keypad wiring connections, and make sure each of the 8 basic wired zones has a 2000-ohm resistor connected across its terminals.

5. When the proper “Ready” message is displayed on the keypad(s) addressed at 00, 01, 02, and 03 the system is functioning properly at this point.
   Do not remove the EOL resistors until you are ready to make connections to the wired zones, to allow for testing later in the manual.

If an OPEN CIRCUIT is present on the keypad, data from the control is not reaching the keypad. Please check your wiring.

SECTION 6

Basic Wired Zones 001-009

This section provides the following information

- Common characteristics of wired zones
- Wiring burglary and panic devices to zones 1-8
- Wiring 2-wire smoke detectors to zone 1
- Wiring 4-wire smoke detectors to zones 1-8
- Compatible smoke detectors (2- and 4-wire)
- Wiring 2-wire glassbreak detectors to zone 8
- Zone 9 applications
- Check-out procedure for wired zones

Common Characteristics of Wired Zones 1-8

- EOLR supervision (optional for zones 2-8) supporting N.O. or N.C. sensors
- Individually assignable to one of 8 partitions
- Up to 16 2-wire smoke detectors on zone 1.
- 4-wire smoke or heat detectors on zones 1-8
- Up to 50 2-wire latching glassbreak detectors on zone 8.
- Zones 2-7 will sense a fault (when EOLR supervision is used) when the loop resistance is outside of ± 50% of the EOLR value.

Wiring Burglary and Panic Devices to Zones 1-8

1. Connect sensors/contacts to the basic wired zone terminals (10 through 22).
   - Connect N.C. devices **in series** with the high (+) side of the loop. The 2K EOL resistor must be connected in series with the devices, following the last device.
   - Connect N.O. devices **in parallel (across)** the loop. Observe polarity when wiring smoke detectors. The 2K EOL resistor must be connected across the loop wires at the last device.

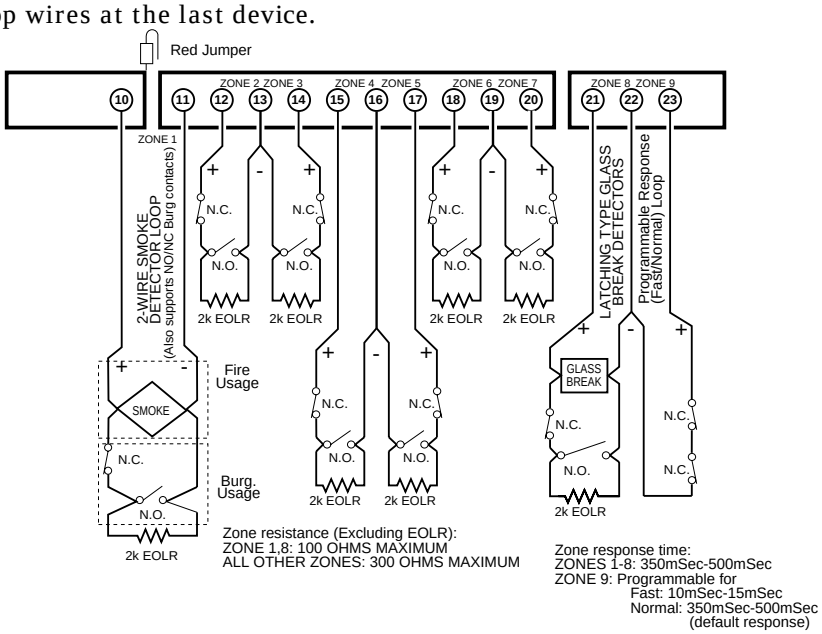

Figure 8: Zones 1-9 Wiring Connections

The maximum zone resistance is 100 ohms for zones 1 and 8, and 300 ohms for all other zones (excluding the 2K EOL resistor).

Wiring 2-Wire Smoke Detectors to Zone 1

Zone 1 has the added capability of supporting 2-wire smoke detectors. This zone provides enough standby current (2 mA) to power up to sixteen of the smoke detectors listed on the following page. Each zone provides only enough alarm current (20 mA) to power one smoke detector in the alarmed state. When assigned zone type 9, the second entry of a Security Code + OFF sequence at a keypad will interrupt power to this zone to allow detectors to be reset following an alarm.

1. Connect 2-wire smoke detectors across zone 1 terminals (10 & 11) as shown below. Observe proper polarity when connecting the detectors.
2. If an EOL resistor is presently connected across zone 1 terminals, remove it. **The EOL resistors must be connected across the loop wires of each zone at the last detector.**

The alarm current provided by zone 1 will support only one smoke detector in the alarmed state.

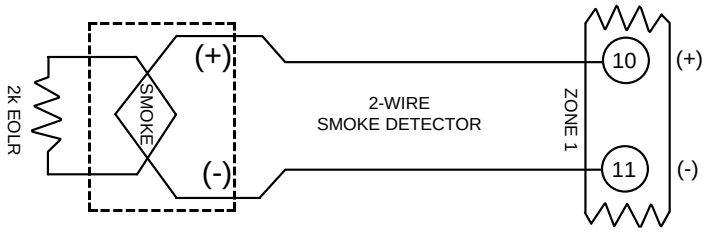

Figure 9: 2-Wire Smoke Detector Connected to Zone 1

Compatible 2-Wire Smoke Detectors

You may use up to sixteen 2-wire smoke detectors each on zone listed in the table below.

DETECTOR TYPE	DEVICE MODEL #
Photoelectric, plug-in head	System Sensor 2600EC
Photoelectric w/heat sensor, direct wire†	System Sensor 2300T
Photoelectric, direct wire†	System Sensor 2400
Photoelectric w/heat sensor, direct wire†	System Sensor 2400TH
Photoelectric w/B401B base†	System Sensor 2451
Photoelectric w/heat sensor and B401B base†	System Sensor 2451TH
Ionisation, plug-in head	System Sensor 1600EC
Ionisation, direct wire†	System Sensor 1400
Ionisation w/B401B base†	System Sensor 1451
Photoelectric duct detect. w/DH400 base†	System Sensor 2451
Ionisation duct detector w/DH400 base†	System Sensor 1451DH
Ionisation, direct wire†	System Sensor 1100
Ionisation w/B110LP base†	System Sensor 1151
Photoelectric, direct wire†	System Sensor 2100
Photoelectric w/heat sensor, direct wire†	System Sensor 2100T
Photoelectric w/B110LP base†	System Sensor 2151

† NOTE: These smoke detectors are Listed for use with the VISTA-120 and are the **only** 2-wire smoke detectors that may be used in UL applications.

Unsupervised Usage of Zone 1

Zone 1 can also be used for normally closed, unsupervised devices by doing the following:

1. Cut the red jumper on the PC board located above Zone 1.
2. Connect closed circuit devices in series with terminals 10 and 11.

Wiring 4-Wire Smoke Detectors to Zones 1-8

When programmed for fire warning usage, all zones can monitor 4-wire smoke detectors or N.O. fire alarm initiating devices. You may use as many 4-wire smoke detectors as can be powered from the panel's auxiliary power output without exceeding the output's rating (see *FINAL POWER UP PROCEDURE* section for auxiliary power ratings).

Auxiliary power to 4-wire smoke detectors is not automatically reset after an alarm and therefore must be momentarily interrupted using either a normally-closed momentary switch wired in series with one side of the aux. power to the smokes, or using a 4204 relay as described below.

Using a 4204 relay allows the detectors to be reset via the second entry of a Security Code + OFF sequence. The 4204 relay must be programmed to activate on Zone Type/System Operation 54 (Fire Zone Reset). See *RELAY OUTPUTS & POWERLINE CARRIER DEVICES* section for more information.

1. Connect 12 volt power for the detectors from Auxiliary Power terminals 6 and 7 as follows:: Wire the [+] side of Auxiliary Power (Terminal 6) to the N.C. contact of the 4204 relay. Wire the Center Arm or Pole of the Relay to the [+] Power side of the smoke detector. Connect the [-] side of the smoke detector to [-] Aux. Power (Terminal 7). Observe proper polarity when connecting detectors (see diagram below).

   Power to 4-wire smoke detectors should be supervised (use a System Sensor A77-716-01 EOL relay module connected as shown).

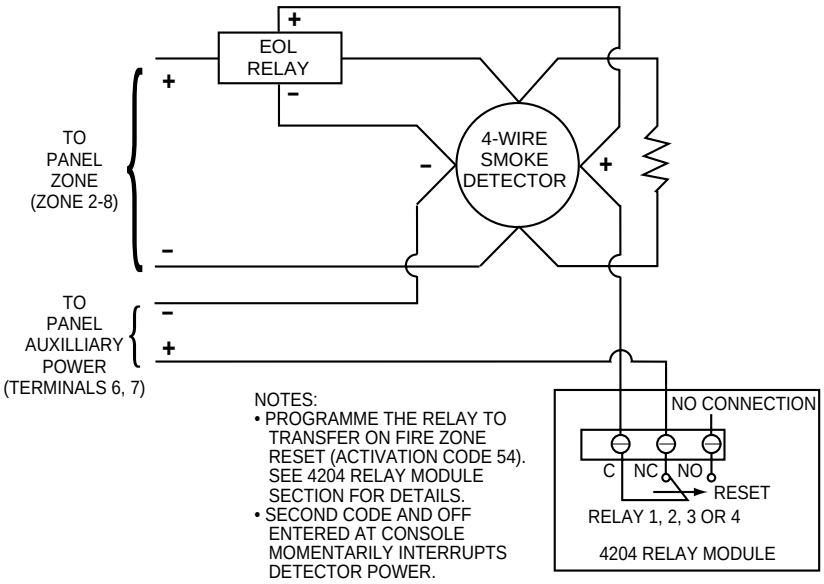

Figure 10: 4-Wire Smoke Detector Power Reset Using 4204 Relay Module

2. Connect detectors (including heat detectors, if used) across terminals of the zone selected. All detectors must be wired in parallel. Remove the 2000 ohm EOL resistor if connected across the selected zone terminals. ***You must connect the EOL resistor across the loop wires at the last detector***.

Compatible 4-Wire Smoke Detectors

Use any 4-wire smoke detector which is rated for 10-14VDC operation and which has alarm reset time not exceeding 6 seconds. Some compatible 4-wire smoke detectors are listed below.

Photoelectric, direct wire	System Sensor 2412
Photoelectric w/heat sensor, direct wire	System Sensor 2412TH
Ionisation, direct wire	System Sensor 1412

Configuring Zone 7 for Alternate Keyswitch Function

Zone 7 may be programmed to serve as a keyswitch input. If using a keyswitch on zone 7, it can be assigned to only one partition. To enable the keyswitch, do the following:

1. Enter the partition number to which the keyswitch is assigned in programme field *15.
2. Zone 7 is automatically assigned a response type 10 (Interior w/Delay).
3. Wire the keyswitch to zone 7. Connect the EOL resistor across the zone. If using keyswitch LEDs, wire as shown in the *VOLTAGE TRIGGERS* section.

Wiring 2-Wire Latching Glass Break Detectors To Zone 8

Use zone 8 for connection of compatible 2-wire latching-type glass break detectors. Wire as follows (also see diagram below):

1. Connect all detectors in parallel across zone 8 (terminals **21** and **22**).

Remove the 2000 ohm EOL resistor if connected across the selected zone terminals. You must connect the EOL resistor across the loop wires at the last detector.

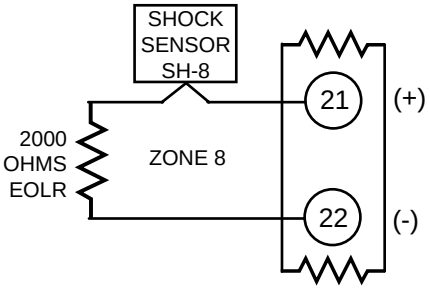

Figure 11a. Wiring the SH-8 Shock Sensor in Series to Zone 8

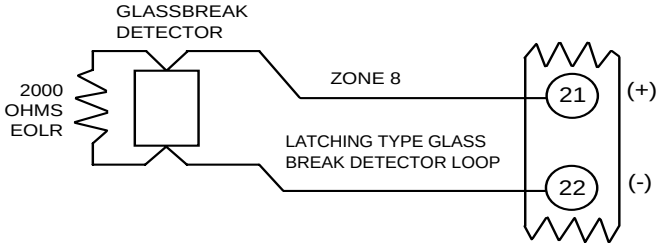

Figure 11b. Wiring Latching Glassbreak Detectors in parallel to Zone 8.

After an alarm, the first code + OFF turns off the siren and disarms the system; the second code + OFF clears the memory of alarm and resets the glassbreak detector.

Compatible Glass Break Detectors

Use detectors that meet the following ratings:

Standby Voltage:	5VDC–13.8VDC
Standby Resistance:	Greater than 20k ohms (equivalent resistance of all detectors in parallel)
Alarm Resistance:	Less than 1.1k ohms (see note below)
Alarm Current:	2 mA–10 mA
Reset Time:	Less than 6 seconds

The **IEI 735L series detectors and FBII SH8 shock sensors** have been tested and found to be compatible with these ratings. You can use up to fifty IEI 735L detectors connected in parallel. You can use up to four SH8 sensors connected in series.

The alarm current provided by zone 8 will support only one Glass Break detector in the alarmed state.

You can use detectors which exceed 1.1k ohms in alarm, provided they maintain a voltage drop in alarm of less than 3.8 volts.

A. Do not use other NO or NC contacts when using glass break detectors on zone 8. Other contacts may prevent proper glass break detector operation.
B. If latching type devices are installed on both zones 1 and 8, both zones should be assigned to the same partition. If they are not, and both devices are in alarm at the same time, the resetting of one could cause a loss of alarm memory in the other.

Zone 9 Applications

This zone is unsupervised and is suitable for monitoring fast acting glass break sensors or vibration sensors. When using zone 9, keep the following in mind:

- Use only closed circuit devices connected in series with one another.
- Programme zone 9 as any response type ***except*** fire (type 09) or panic (types 6,7 or 8)
- Programme fast (10 msec) or normal (350 msec-500 msec) response in data field *14.

Avoid using mechanical magnetic or relay type contacts on zone 9 when programmed for fast response.

Check-Out Procedure For Basic Wired Zones

After installation and programming of all basic wired zones is complete, *each* partition of the security system should be checked as follows:

1. Make certain that all devices and sensors connected to the basic wired zones are not in a faulted state. Doors and windows with contacts should be closed, PIRs should be covered (use a cloth to mask them temporarily if necessary).
2. With all basic wired zones intact, the keypads connected to the system should display:

   DISARMED
   READY TO ARM.

   If the following is displayed,

   DISARMED Press ✳
   to show faults

   press the **[✳]** key to display the faulted zone(s). Restore any faulted zone(s) as necessary (also make sure that you have connected a 2000 ohm EOL resistor across the terminals of unused zones). When the DISARMED...READY TO ARM message is displayed, you can proceed to the next step.
4. Fault and then restore every contact or sensor on each zone individually to ensure that it is being monitored by the system. Each time a zone is faulted, the keypads in the partition to which the zone is assigned should display the number of the faulted zone. When each zone is restored, the READY TO ARM message should appear again.

If a zone or zones are not displayed at the correct partition's keypad(s), check both keypad and zone programming to verify the correct partition assignment.

5. When you get the proper displays on the keypad(s), the basic wired zones in the system are functioning properly.
6. Disconnect AC mains.

SECTION 7

2-Wire Polling Loop Zones 010-128

This section provides the following information:

- Polling loop overview
- Common characteristics of polling loop zones
- Wiring RPM devices to the polling loop
- Addressing RPM devices
- Polling loop limitations
- Checkout procedure for polling loop zones

Polling Loop Overview

You can expand the system from the basic 9 zones to up to 128 zones using the built-in 2-wire polling loop. Each device that is connected to the polling loop has the ability to communicate with the panel about its status. These devices are called RPMs (Remote Point Modules). The polling loop provides both power and data to the RPM zones, and is constantly monitoring the status of all zones enabled on the loop. The maximum current drain of all devices on the polling loop cannot total more than 128mA (unless using a 4297 Polling Loop Extender Module).

Refer to the list of compatible devices at the end of this section.

Common Characteristics of Polling Loop Zones

Polling loop zones have the following characteristics:

- Must use RPM (Remote Point Module) devices
- Supervised by control panel
- Individually assignable to one of 8 partitions

Wiring/Addressing RPM Devices

All devices on the polling loop must be wired in parallel to the [+] and [-] Polling Loop terminals of the control panel (24 and 25, respectively). You can wire from device to device, or have multiple branches connected directly to the control panel in a star configuration. Be sure to observe proper polarity.

Although each polling loop device is wired in parallel, each device has its own unique zone number (or group of zones if it is an 8- zone expander). On some devices, this is determined by the setting of DIP switches. Other devices have a built-in unique serial number which must be "enrolled" into the control using a desired zone number. Whenever possible, serial number addressing mode should be selected instead of DIP switch addressing mode for improved processing speed.

Set up the polling loop as follows:

1. Run wires to each device on the polling loop using the guidelines in the following table for maximum wire runs per wire size Twisted pair wire is recommended for all wire runs.

Maximum Polling Loop Wire Runs

Wire Size	Max. Length
0.64 mm O.D.	198 m
0.81 mm O.D.	290 m
1.0 mm O.D.	457 m
1.3 mm O.D.	732 m

Maximum total wire runs combined must not exceed 1220m regardless of wire size (610m if shielded wire is used).

When running polling loop wires, they must not be run within 15 cm of AC mains voltage, telephone or intercom wiring. Since the polling loop is carrying data between the control panel and the devices, interference on this loop can cause an interruption of this communication. The polling loop can also cause outgoing interference on the intercom or phone lines. If this spacing cannot be achieved, shielded wire must be used. (Note that the maximum total wire length supported is halved when shielded wire is used.)

2. Wire each device to the polling loop, making sure to use correct polarity when making connections (refer to the device's instructions).
3. Note the polling loop devices that have DIP switches on them. Set each device's DIP switches for the zone number you are assigning it. Refer to the device's instructions or the DIP Switch Tables found at the end of this manual when setting addresses.
   Certain polling loop devices, such as the 998MX, 4278EX-SN, 4959SN, 4939SN and 4191SN, do not have DIP switches. Instead, they have internal serial numbers which must be "enrolled" by the control during #93 Menu Mode Zone Programming.

BASIC POLLING LOOP CONNECTIONS

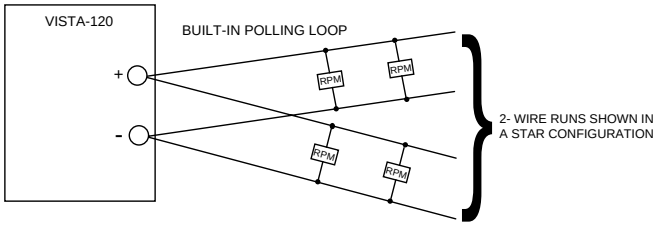

Figure 12. Polling Loop Connections

When in a star configuration, no individual run can be longer than the table indicates, and the total length of all the sensor star runs, combined, cannot exceed 1220m. If using unshielded wire in conduit or shielded wire, the maximum is 610m. If longer wire runs are needed, a 4297 Polling Loop Extender Module must be used.

Polling Loop Limitations

The built-in polling loop has the following limitations that must be observed:

- The maximum allowable current drain from the polling loop is 128mA. Refer to the POLLING LOOP CURRENT DRAIN WORKSHEET (found in the *FINAL POWER-UP PROCEDURE* section) for current drains of various polling loop devices. If device drain totals more than 128 mA, a 4297 Polling Loop Extender Module is required.
- The 4297 Polling Loop Extender Module may be used to provide additional polling loop current, to extend the polling loop wire run, and/or to provide individual, electrically isolated polling loops. Refer to the 4297 Polling Loop Connection diagrams later in this section.

DO NOT use the 4197 Polling Loop Extender Module with the VISTA-120.

- Regardless of current drain, no more than 64 DIP switch devices or 119 serial number devices can be connected to the polling loop. Installations which require up to 119 zones using DIP switch devices will require the use of zone expanders (4190WH and/or 4208), which allow more than one zone on each expander. Otherwise, a 4297 Polling Loop Extender must be used.

Make certain to include the total current drain on the polling loop when figuring the total auxiliary load on the panel's power supply (use the AUXILIARY CURRENT DRAIN WORKSHEET in the *FINAL POWER UP PROCEDURE* section.

Notes: - Do not use the 4197 module with VISTA-120.
- Refer to 4297 instructions for more detailed installation information.

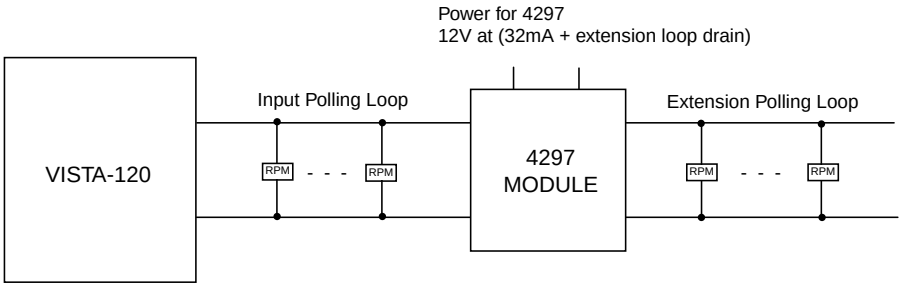

Figure 13a. Polling Loop Connections Using One 4297 Extender Module

Notes: - Do not use 4197 module with VISTA-120.
- Refer to 4297 instructions for more detailed installation information.
The Limits shown below supercede the limits described in the 4297 instructions.
- Do not connect 4297 modules in series.

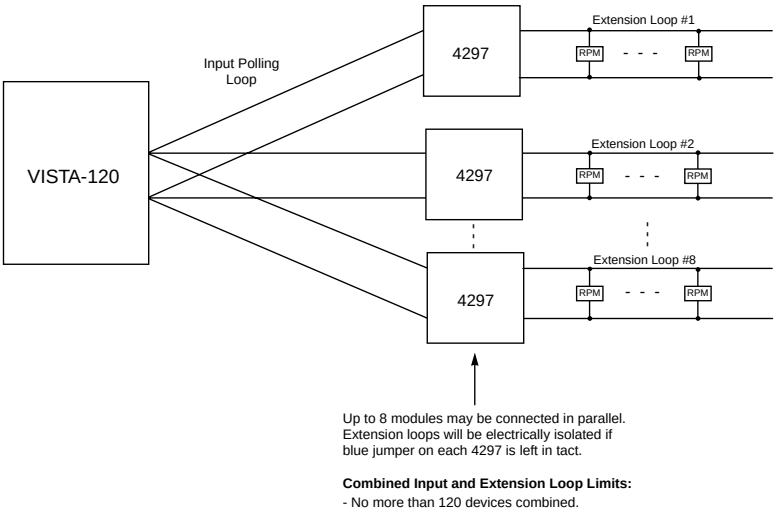

Figure 13b. Polling Loop Connections Using Multiple 4297 Extender Modules

Polling Loop Supervision

An overload on the polling loop is indicated by a trouble on its supervisory zone (997) and reports as a trouble condition only, even if the system is armed. As such, it should be assigned zone type 05 if annunciation is desired.

If a device on the polling loop fails (the panel cannot "see" that device), the partition (or partitions) that use that device will display a trouble condition for all zones associated with that device. If the panel is armed when a device fails, the zones associated with that device will cause an alarm on the corresponding partition(s).

A trouble on Zone 997 will not prevent a partition from being armed, as long as all polling loop zones on that partition are bypassed.

Maintenance Signal Support

The control monitors maintenance signals from certain smoke detectors (4192CPM, 4192SDM, 4192SDTM). Maintenance signals are triggered when a detector gets dirty and indicate that the detector should be cleaned or replaced. If a detector maintains a high or low sensitivity condition for longer than 24 hours, the control sends a dialer report (trouble message for non-Contact ID reports; event code 385 or 386 for Contact ID reports), makes an event log entry, and displays HSENSxxx or LSENSxxx at the keypads (xxx = zone number).

Check-Out Procedure For Polling Loop Zones

After installation and programming of all polling loop zones is complete, *each* partition of the security system should be checked as follows:

1. Make certain that all devices and sensors connected to the polling loop are not in a faulted state. Doors and windows with contacts should be closed, PIRs should be covered (use a cloth to mask them temporarily if necessary).
2. With all hard-wired and polling loop zones intact, the keypads connected to the system should display:

   DISARMED
   READY TO ARM

   If the keypad(s) begins beeping and the word "CHECK" or "TRBLE" is displayed, along with a zone or zone numbers, the system either ***does not see*** the displayed zone(s) or the tamper switches on 4190WH, 4275EX, 4278EX, 4278EX-SN, 998MX units are faulted. Please check the DIP switch settings for the zone(s), all connections, and/or that the covers are in place. Once the situation has been corrected, enter the [Security Code] + [OFF] sequence twice to clear the trouble.

   If the following is displayed,

   DISARMED Press ✳
   to show faults

   press the **[✳]** key to display the faulted zone(s). Restore any faulted zone(s) as necessary. When the DISARMED...READY TO ARM message is displayed, you can proceed to the next step.
4. Fault and then restore every contact or sensor on each zone individually to ensure that it is being monitored by the system. Each time a zone is faulted, the keypads in the partition to which the zone is assigned should display the number of the faulted zone. When each zone is restored, the READY TO ARM message should appear again.

If a zone or zones are not displayed at the correct partition's keypad(s), check both keypad and zone programming to verify the correct partition assignment.

5. When you get the proper displays on the keypad(s), the polling loop zones in the system are functioning properly.
6. Disconnect AC mains.

Compatible Polling Loop Devices

NOTE: Use of more than 50 DIP switch devices can greatly impact the panel's ability to respond to a change in status in a timely manner.
DIP switch devices that affect response time include:
4278EX, 4275EX, 4190WH, 7500, 9500

4208U **4208UXM3**	**8-Zone Expander**	• Supports up to 8 zones via the polling loop. • **Must use** serial number enrollment mode. • The first two zones can be either normal or fast response (DIP switch selectable). • All zones are EOLR supervised (10k ohms), provided with the 4208. • The 4208UXM3 has 4 programmable O.C. output triggers and can be configured for double balanced zones for non-fire applications.
4209U	**Group Zoning Mod. (4-Zone Expander)**	• Supports up to 4 zones via polling loop. • **Must use** serial number enrollment mode. • 4 supervised zones or 2 supervised zones in "group" mode (2 zones grouped as 1 zone) • Supports 2-wire smoke det. loops, 16 per zone if 4 zones used or 32 per zone if 2 zones used. • All zones are EOLR supervised (2k ohms), provided with the 4209U.
4190WH	**2 -Zone Expander**	• Supports up to 2 zones via the polling loop. • DIP switch programmable (128 addresses). **NOTE:** Use of 4190SN is preferred, whenever possible, for improved system timing. • Tamper protected • The left zone can be EOLR supervised, can accept either open or closed circuit sensors, and can be set for fast response. • The right zone is unsupervised and can accept closed circuit sensors only.
4190SN	**2-Zone Expander**	• Supports up to 2 zones via the polling loop. • Tamper protected • The left zone can be EOLR supervised, can accept either open or closed circuit sensors, and can be set for fast response. • The right zone is unsupervised and can accept closed circuit sensors only.
4278EX **4278EX-SN**	**Quad PIR**	• Quad element mirror optics PIR with built-in RPM • Serial number ID "enrolled" by control ("SN") **NOTE:** Use of 4278EX-SN is preferred, whenever possible, for improved system timing. • 4278EX DIP switch programmable; 64 addresses. • Tamper protected. • Includes mirrors for both wide angle and curtain/long range applications. • Features an auxiliary sensor loop that is non-supervised and can accept closed circuit sensors only. • 4278EX can have its walk test LED enabled/disabled via keypad commandsrouted over the polling loop
4275EX **4275EX-SN**	**Dual PIR**	• Dual element PIR with built-in RPM • Serial number ID "enrolled" by control ("SN") **NOTE:** Use of 4275EX-SN is preferred, whenever possible, for improved system timing. • 4275EX DIP switch programmable (64 addresses) • Tamper protected • Includes mirrors for both wide angle and curtain/long range applications and can use the 1875PA Pet Alley mirror. • Built-in selectable pulse count capability. • 4275EX can have its walk test LED enabled/disabled via keypad commands routed over the polling loop

Compatible Polling Loop Devices

998MX	**Dual PIR**	Dual element PIR eith built-in RPM (connects directly to the polling loop). • **Must use** serial number enrollment mode. • Tamper protected. • Anti-creep lookdown protection • Includes Fresnel lenses for wide angle and long range/curtain applications. • Selectable pulse count
4297	**Extender Module**	• Used to increase the polling loop current 128mA), to extend the polling loop wire run length, and/or to provide individual, electrically isolated loops. Connects to the polling loop and is powered from panel's auxiliary power or by a separate power supply with battery backup.
5192SD	**Photoelectric Smoke Detector**	• One piece photoelectric smoke detector with built-in RPM. • DIP switch programmable (64 addresses) or serial number enrolled.
5192SDT	**Photoelectric Smoke Detector w/Heat Detector**	• One piece photoelectric smoke detector 57°C heat detector, and built-in RPM. • DIP switch programmable (64 addresses) or serial number enrolled.
4101SN	**Serial Number Single Output Relay Module**	• Form C relay rated at 2A, 28VAC/VDC with contact supervision • One class B/style B EOLR-supervised aux input zone • Serial number ID programmed by control • Tamper-protected cover
4191SN	**Serial Number Recessed Reed Contact**	• Recessed (12.7mm dia.) magnetic reed contact with built-in RPM. • Serial number ID "enrolled" by control panel.
4193SN	**2-Zone Monitor Module**	• Accommodates up to 2 zones via polling loop. • Small enough to conceal inside various sensors. • Left zone can be EOLR supervised, can accept either open or closed circuit switch sensors. • Right zone is unsupervised and can only be used with closed circuit sensors • Usable with double pole keyswitch for keyswitch by partition usage • Serial number ID "enrolled" by control
4293SN	**1-Zone Monitor Module**	• Accommodates 1 zone via polling loop • Small enough to conceal inside various sensors. • Serial number ID "enrolled" by control
4939SN	**Surface Mount Magnetic Reed Contact**	• Surface mount magnetic reed contact with built-in RPM. • 1.5m jacketed cable. • Serial Number ID "enrolled" by control.
4959SN	**Aluminium Overhead Door Contact**	• Aluminium overhead door/roller shutter contact • 0.6m armored cable • Serial number ID "enrolled" by control.
7500	**Acoustic Glass Break Detector**	• Glass break detector with built-in RPM. • DIP switch programmable (64 addresses).
9500	**Dual Technology Glass Break Detector**	• Dual technology glass-break detector with built-in RPM. • DIP switch programmable (64 addresses). • Keypad controlled test

SECTION 8

Wireless (RF) Zone Expansion

This section provides the following information:

- Common characteristics of wireless zones
- Wireless systems available
- Installing the wireless receiver (4281/5881/5882EU)
- Installing the 5800TM Module
- Installing the wireless transmitters (5700/5800/5800EU series)
- Checkout Procedure for wireless zones (test modes)

Common Characteristics of Wireless Zones

- Supervised by control panel for check-in signals (except certain non-supervised transmitters)
- Individually assignable to one of 8 partitions

Wireless Systems Available

The VISTA-120 supports wireless zones which may be used exclusively or in addition to basic wired and/or polling loop zones. The system supports either of two wireless systems (5700 series or 5800 series) which have many similarities, but with notable differences in the programming of the transmitters for each system.

The following families of receivers may be used with this system, but you can use only one family of receivers in a given installation (i.e. you cannot mix 5700 with 5800):

5700 Series

Recvr	Zones
4281L	up to 4
4281M	up to 8
4281H	up to 63

5800 Series

Recvr	Zones
5881L	up to 8
5881M	up to 16
5881H	up to 128

5800EU Series

Transcvr	Zones
5882EU	up to 128

Wireless System Operation and Supervision

- The receiver responds to status and alarm signals from wireless transmitters [345MHz (5700 series), 345 MHz (5800 series) and 433.92MHz (5800EU series)] within a nominal range of 60m, and relays this information to the control.
- Each 345MHz supervised transmitter sends a supervisory signal to the receiver every 70-90 minutes (433.92MHz transmitters transmit every 25 minutes). If, after a programmed interval of time (e.g., 12 hrs), the receiver does not hear from a *particular* transmitter, the word CHECK or TRBL will appear at the corresponding partition's keypad(s) accompanied by the zone number in question. The trouble will not prevent you from arming the panel, as long as the zone is first bypassed.
- If, within a programmed interval of time (e.g., 12 hrs), the receiver does not hear from *any* of its transmitters, a CHECK or TRBL message will appear for zones 988 (2nd receiver) or 990 (1st receiver) if zone type 05 is assigned to these supervisory zones. This may be an indication that the wireless receiver is not able to "hear" signals. The same indications are provided if the 5882EU transceiver detects that it is being jammed by a source of RF energy that is present for 30 seconds within any 60 second interval.
- The control checks the receiver connections about every 45 seconds. If the panel has lost communication with the receiver, a CHECK or TRBL message will appear for the receiver zone number (8xx, where xx = receiver's device address) if type 05 is assigned to these supervisory zones. This may be an indication that the wiring to the receiver is incorrect, or that the DIP switches are not set for the same address the receiver was assigned to in the panel's Device Programming mode.
- Two identical receivers can be used to provide either a greater area of coverage, or to provide redundant protection.
- Any zone from 1-63 can be used as a 5700 series wireless zone. Any zone from 1-128 can be used as a 5800 series wireless zone, with the exception of zone 64 (reserved for a wireless keypad).

Wireless System Installation Advisories

1. Place the receiver in a high, centrally located area for best reception. Do not place receiver on or near metal objects. This will decrease the range and/or block transmissions. Do not mount receivers or transmitters in an attic, where extreme temperatures could prevent proper operation.
2. For maximum range, install the wireless receiver at least 3 meters from the Control panel or any keypads to avoid interference from the microprocessors in these units.
3. If dual receivers are used:
   A. Both must be at least 3m from each other, as well as from the Control panel and remote keypads.
   B. Each receiver must be set to a different Device Address (01-07). The receiver set to the lower address is considered the 1st wireless receiver for supervisory purposes.
   C. The house IDs must be the same (applies only to 5700 series or if using a 5827/5827BD wireless keypad).
   D. Using two Receivers *does not* increase the number of transmitters the system can support (63 zones using 4281H; 128 zones using the 5881H/5882EU) plus a wireless keypad).

Installation and Setup of the 4281/5881/5882EU Wireless Receivers

1. Mount the receiver(s). Receivers must be mounted externally to the control and can detect signals from transmitters within a nominal range of 60m. Take this into consideration when determining mounting location.
2. Connect the receiver's wire harness to the control's keypad terminals (6, 7, 8, and 9). Plug the connector at the other end of the harness into the receiver.
3. Refer to the installation instructions provided with the receiver for further installation procedures regarding antenna mounting, etc.
4. Set the receiver's DIP switches for an address (01-07) which is not being used by another device (i.e., keypads, relay modules, etc.).

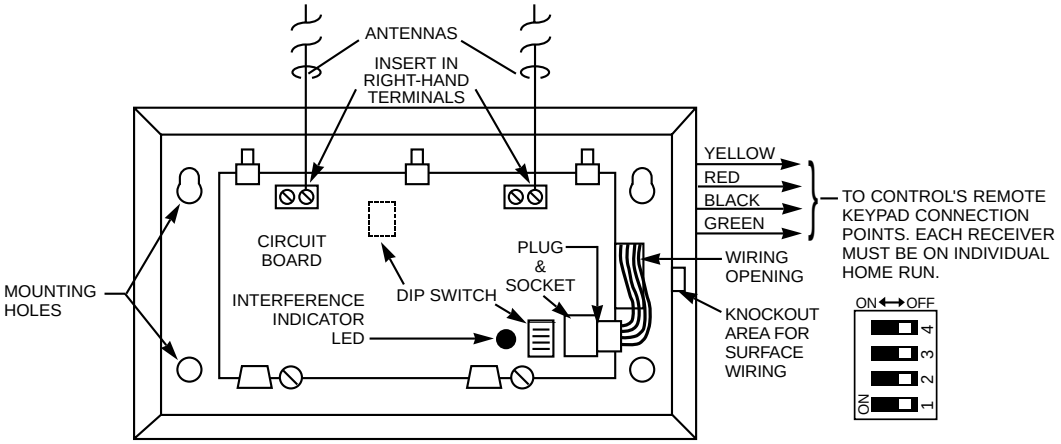

Figure 14a: 5881 Wireless Receiver (cover removed)

5839EU/5882EU NOTES:

- 5882EU cover must be removed before enrolling 5839EU keypad into receiver.
- Each 5839EU can be enrolled in only one 5882EU (do not assign a given 5839EU to more than one transceiver).

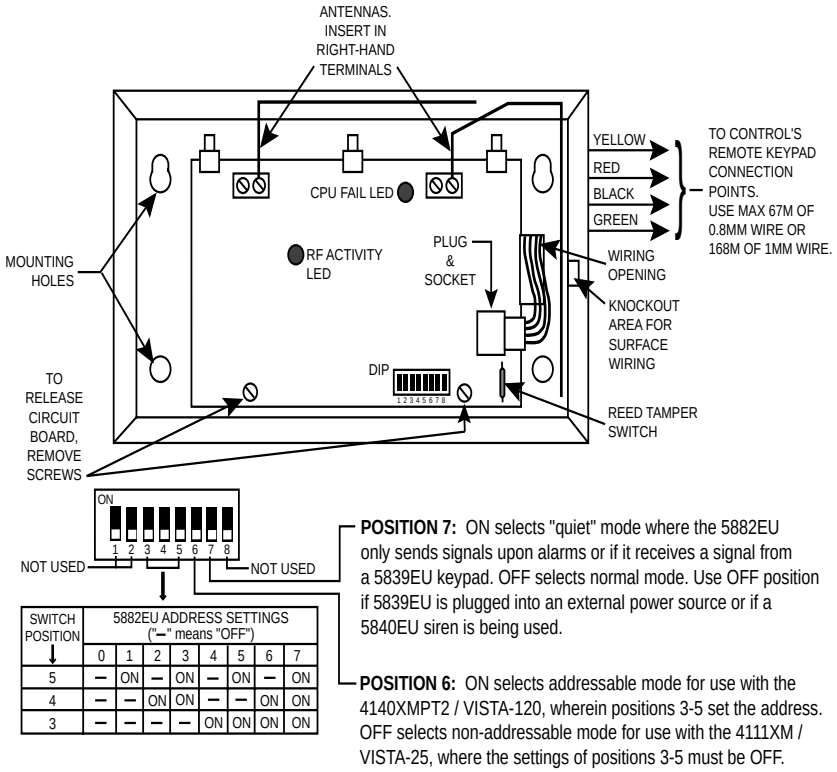

SWITCH POSITION ↓	5882EU ADDRESS SETTINGS ("–" means "OFF")							
	0	1	2	3	4	5	6	7
5	–	ON	–	ON	–	ON	–	ON
4	–	–	ON	ON	–	–	ON	ON
3	–	–	–	–	ON	ON	ON	ON

Figure 14b: 5882EU Wireless Transceiver (cover removed)

Take note of the address you select for the wireless receiver as this address must be enabled in the system's *Device Programming* mode.

Installing the 5800TM Module

Installation of this module is necessary only if you are using one or more 5827BD Wireless Bi-directional keypads.

The 5800TM must be located between 0.3m and 0.6m from the 4281 or 5881 receiver's antennas. The 5800TM must not be installed within the control cabinet. Mount the unit using its accompanying mounting bracket.

5800TM Wiring Connections

Connect the 5800TM to the control panel's keypad connection terminals, using the supplied connector with flying leads, as follows:

WIRE	TERMINAL ON CONTROL
RED (+12VDC)	Terminal 6
BLACK (Ground)	Terminal 7
GREEN (Data to Control)	Terminal 8
YELLOW (Data from Control)	Terminal 9
BLUE: Not Used	

Cut the red jumper for address setting 28; cut the white jumper for address 29; cut both jumpers for address 30.

This address must be enabled as an alpha keypad in the control's *Device Programming* mode and then assigned to a partition.

For additional information, refer to the 5800TM's instructions.

House ID Sniffer Mode

This mode applies only to 5700 series systems, or if you are using a wireless keypad (5827/5827BD) in a 5800 series system.

5700 series receivers respond only to transmitters set to the same House ID (01-31) that is programmed into the control panel. This prevents system interference from transmitters in other nearby systems. Use the House ID Sniffer Mode to

make sure you do not choose a House ID that is in use in a nearby system. To enter this mode, proceed as follows:

1. Enter your "Installer Code" + [#] +[2] .
2. The receiver will now "sniff" out any House IDs in the area and display them. Keep the receiver in this mode for about 2 hours to give a good indication of the House IDs being used. Use a House ID that is **not displayed**.
3. To exit the Sniffer Mode, simply enter your Installer Code + OFF.

Since Sniffer Mode effectively disables wireless point reception, Sniffer Mode **cannot** be entered while any partition is armed.

5700 Series Transmitter Setup

Each 5700 series transmitter has DIP switches to set both the transmitter's zone number (Transmitter ID) and the system House ID. The House ID will be the same for all transmitters and must match the House ID programmed into the system (via Device Programming) for the wireless receiver. This can be likened to a family in which everyone has the same last name (House ID), but each person has a different first name (Transmitter ID). The zone number must then be programmed into the system using #93 Menu Mode–Zone Programming Menus.

5700 Series Transmitter Supervision

- Each transmitter (except 5701 and 5727) is supervised by a check-in signal that is sent to the receiver at 70-90 minute intervals. If at least one check-in is not received from a transmitter within a certain period of time (Programmed in field 1*31), the keypad will display the zone number and "CHECK."
- Each transmitter (including 5701 and 5727) is also supervised for a low battery condition, and will transmit a low battery signal to the receiver when the battery has approximately 30 days of life remaining. The keypad will display the transmitter number and "LO BAT," (or "00" and LO BAT for a wireless keypad).

5700 Series Transmitter Battery Life

- Batteries in the wireless transmitters may last about 2 years for 5700 series transmitters, depending on the environment, usage, and the specific wireless device being used. External factors such as humidity, high or low temperatures, as well as large swings in temperature, may reduce the actual battery life in a given installation. The wireless system can identify a true low battery situation, thus allowing the dealer or user of the system time to arrange a change of battery and maintain protection for that given point within the system.
- Button type transmitters should be periodically tested by the user for battery life (ex. 5701).
- After replacing a low or dead battery, activate the transmitter and enter the Security Code + OFF to clear its memory of the "Low Battery" signal.

Installing 5700 Series Transmitters

A variety of wireless system transmitters can be used to make up the wireless zones. These include window/door units, smoke detectors, PIRs, glassbreak sensors, and panic buttons. Zone number assignments can be from **1-63**.

1. Set the DIP switches on each 5700 series transmitter to the appropriate zone number and House ID. Refer to the Compatible Transmitters Table later in this section for zone numbers and programming information for each particular transmitter.
2. Install each transmitter in accordance with the instructions provided with the transmitter.

Before permanently mounting the transmitters, make sure reception of each transmitter's signal at the proposed mounting location is adequate. To do this, perform a Go/No Go test, which is described later in this section.

3. Programme the transmitters using the #93 Menu mode Zone Programming option.

Wireless Zone Assignments for 5700 Series Transmitters

Each wireless zone can be assigned any zone response type, such as Entry/Exit, Interior Follower, Perimeter, etc. (see the ZONE TYPES section for explanations of each zone type). For 5700 series transmitters, each response type uses a certain range of zone numbers. Each range of zone numbers is indicated below:

5700 Series Zone Response Types

Zone Type	Trans/Zone #
Entry/Exit Burg	1 through 47 *
Perimeter Burg	1 through 47 *
Interior Burg	1 through 47 *
	32 through 47 * (5775)
Fire	48 through 63 *
	48 through 55 ** (5706)
24 Hour Panic	48 through 63*
(silent or audible)	62 or 63 *** (5701)
Day/Night Burglary	1 through 47 *
24 Hour Auxiliary	1 through 47 *

* Note that zones 1-63 can be used, but have the following limitations:

1. Transmitters set for zones 48-55 will transmit once every 12 seconds while the zone is faulted. Transmitters set for zones 56-63 will transmit once every 3 seconds while faulted. These two ranges of zone numbers could adversely affect transmitter battery life.
2. Transmitters set for an ID of 32 through 47 will have a 3 minute lock-out between transmissions. Use this last range of zone ID numbers for sensors protecting frequently used doors or windows to conserve battery life.

** Transmitter IDs 48 through 55 have highest signal priority.

***Transmitter IDs 62 and 63 are unsupervised to allow removal of the 5701 off premises -- signal priority is lower than that of fire, but higher than burglary.

Compatible 5700 Series Transmitters

Model	Product	Zone Num.	Description
5701	**Panic Transmitter**	**62 or 63**	• Programmable for either silent or audible 24 hour alarm.
5706	**Photoelectric Smoke Detector**	**48-55**	• One piece smoke detector with built in transmitter. • Built-in 85 dB piezoelectric alarm sounder and audible low battery warning.
5711	**Slimline Door/ Window Transmitter**	**1-63**	• Can be used with any closed or open circuit sensor.
5715WH	**Universal Transmitter**	**1-63**	• DIP switch selectable for fast response, and open or closed sensor usage. • Has a tamper protected cover.
5716 **5716WM**	**Door/Window Transmitter**	**1-63**	• Can be used with any open or closed circuit sensor. • Features a built-in reed switch. • 5716WM includes magnet.
5742	**Audio Discriminator**	**1-63**	• For use in unoccupied areas to detect the sound of shattering glass when a window is broken.
5743	**Dual Technology Glassbreak Detector**	**1-63**	• Detects the sound *and* shock of breaking glass and requires the presence of *both* to initiate an alarm condition.
5775	**PIR Detector**	**32-47**	• Dual element passive infrared detector with built-in selectable pulse count. *Note*: There is a 3 minute lock-out between fault transmissions to conserve battery life.
5727	**Wireless Keypad**	**House ID**	• Can be used to turn the burglary protection on and off • Features the same built-in panic functions as wired keypads. • Must be assigned to a partition. • Identified as zone "00" (on wired keypads) when it transmits with a low battery.
5827BD	**Wireless Keypad**	**House ID**	• Same features as above plus: Requires use of 5800TM Module (must be enabled in Device Programming. • Can indicate system status via its 3 LEDs and sounder. • House ID must be set.

5800/5800EU Series Transmitter Setup

5800/5800EU series transmitters have built-in serial numbers that must be "enrolled" by the system using the # 93 Menu mode programming, or input to the control via the downloader 5800/5800EU series transmitters (except 5827 described separately) do not have DIP switches

Each transmitter's zone number is programmed into the system in # 93 mode. Some transmitters, such as the 5816, 5816EU and 5817, can support more than one "zone" (referred to as loops or inputs). On the 5816/5816EU for example, the wire connection terminal block is loop 1, the reed contact is loop 2. Each loop must be assigned a different zone number and enrolled separately.

For button transmitters (wireless "keys), such as the 5804, and, you must assign a unique zone number to each individual button used on the transmitter. Each button on the transmitter also has a pre-designated loop or input number, which is automatically displayed when enrolled.

5800 Series Transmitter Supervision

Except for some transmitters that may be carried off-premises (5802, 5802CP, 5804, 5804EU, 5804BD, 5827), each transmitter is supervised by a check-in signal that is sent to the receiver at 70–90 minute intervals (25 minutes for 5800EU series). If at least one check-in is not received from each *supervised* transmitter within a programmed time period (i.e., 12 hours for 5800 or 2 hours for 5800EU), the "missing" transmitter number(s) and "CHECK" will be displayed.

The supervision for a particular transmitter that may be carried off the premises (5801, 5802MN, 5802MN2, 5802EU) may be turned off by enrolling it as a "UR" (Unsupervised RF) type, as described later.

5800 series transmitters have built-in tamper protection and will cause a “CHECK” or "TRBL" condition to be annunciated if covers are removed, provided that programme field *24 (Disable Expansion Zone Tamper) is set for "0." 5800EU series transmitters (5816EU, 5839EU and 5888EU) are also tamper protected against wall removal.

5800 Series Transmitter Battery Life

- Batteries in the wireless transmitters may last from 4-7 years, depending on the environment, usage, and the specific wireless device being used. External factors such as humidity, high or low temperatures, as well as large swings in temperature may all reduce the actual battery life in a given installation. The wireless system can identify a low battery situation when the battery still has 30 days of life remaining, thus allowing the dealer or user of the system time to arrange a change of battery and maintain protection for that given point within the system.
- Some transmitters (e.g., 5802 and 5802CP) contain long-life but non-replaceable batteries. At the end of their life, the complete unit must be replaced (and a new serial number enrolled by the control).
- Button type transmitters (ex. 5801, 5802, 5802CP, 5804 & 5804EU) should be periodically tested by the user for battery life.

Do not install batteries in wireless transmitters until ready to enroll them. Though it is not critical to remove batteries after enrolling, it is recommended in order to avoid interference while enrolling additional transmitters.

Compatible 5800 Series Transmitters

Model	Product	Enroll As Input Type	Description
5801	**Wireless Panic Transmitter**	**UR or RF**	• Has four pushbuttons, each with a unique input (loop) code. • Programmable responses (e.g., Panic, Arm–Stay, Arm–Away, Disarm, etc. • For arming/disarming functions, button must be assigned to a user code when "adding a user."
5802	**Pendant (Personal Emergency) Transmitter**	**BR Only**	• Has single pushbutton. • Usually programmed for response type of 24Hr. Audible or 24 Hr. Silent (other zone responses are possible.
5802CP	**Belt Clip (Personal Emergency) Transmitter**		• Contains a non-replaceable battery. At the end of the battery's life, the entire unit must be replaced. • If using for arming/disarming, the button must be assigned to a user code when "adding a user."
5802MN	**Miniature (Personal Emergency) Transmitter**	**UR or RF**	• Has single pushbutton. • Usually programmed for a response type of 24 Hr. Audible or 24 Hr. Silent (other zone responses are possible. • If using for arming/disarming, the button must be assigned to a user code when "adding a user".
5802MN2 **5802EU***	**2-Button (Personal Emergency) Transmitter**	**UR or RF**	• Both buttons must be pressed at the same time. • Usually programmed for a response type of 24 Hr. Audible or 24 Hr. Silent.
5804 **5804BD** **5804EU***	**Wireless Key Transmitter**	**BR Only**	• Has 4 pushbuttons, each with a unique input (loop) code, and has a replaceable battery. • Programmable responses (e.g., Arm–Stay, Arm–Away, Disarm, etc.). • If using for arming/disarming, the unit must be assigned to a user code when "adding a user." • 5804BD has status LEDs and a status piezo sounder.
5806 **5807** **5808** **5808EU***	**Wireless RF Photoelectric Smoke Detectors**	**RF**	• One piece smoke detectors with built in transmitter. • Only 5806CN is UL approved.
5816 **5816EU***	**Door/Window Transmitter**	**RF**	• Has two unique input (loop) codes one for a wired closed circuit contact loop; the other for a built-in reed switch (used in conjunction with a magnet).

* CE approved and specifically type approved in France, Germany, Italy, Netherlands, and Spain

Model	Product	Enroll As Input Type	Description
5816 TEMP	**Low Temperature Sensor**	**RF**	• Transmits a fault condition when temperature drops below 7.2°C. • Enrolled into the system by the internal reed switch using a magnet.
5817	**Multi-Point Universal Transmitter**	**RF**	• Has three unique input (loop) codes: one for a "Primary" contact loop with programmable options; the others for two "Auxiliary" closed circuit contact loops.
5818	**Recessed Transmitter**	**RF**	• Reed switch magnetic contact sensor that is easily concealed in the frame and edge of a door or window. • Has one unique input (loop) code.
5819 **5819S**	**Shock Sensor Analyzer Transmitter**	**RF**	• Shock sensor analyzer for Ademco Inertia Cross-Bar, Ultrak, Litton, Inertiaguard shock sensor. • Built-in reed magnetic contact. • Programmable analyzer response. • 5819S includes a built-in shock sensor
5827	**Wireless Keypad**	**House ID**	• Can be used to turn the burglary protection on and off • Features the same built-in panic functions as wired keypads • The keypad is identified as zone "00" on wired keypads when it transmits a low battery .
5827BD	**Wireless Bi-directional Keypad**	**House ID**	**(used with 5800TM Module)** • Operates the system similarly to wired keypads • Can indicate system status via its 3 LEDs and sounder. • Includes 3 panic keys. • House ID must be set. • Requires 5800TM Transmitter Module (must be enabled in #93 Menu Mode –Device Programming and assigned to a partition in 1*48
5849	**Glass Break Detector**	**RF**	• Requires both sound and shock of breaking glass to cause alarm to be transmitted. • Has unique input code.
5850	**Glass Break Detector**	**RF**	• Requires both sound and shock of breaking glass to cause alarm to be transmitted. • Has unique input code.
5890 **5888EU***	**PIR Detector**	**RF**	• Dual element passive infrared detector/transmitter with built-in selectable pulse count. • Has unique input code • 5888EU has an anti-creep zone ***Note***: There is a 3 minute lock-out between fault transmissions to conserve battery life.

* CE approved and specifically type approved in France, Germany, Italy, Netherlands, and Spain

Check-Out Procedure for Wireless Zones

Go/No Go Test Mode

Before mounting transmitters permanently, conduct Go/No Go tests to verify adequate signal strength and reorient or relocate transmitters if necessary.

During this mode, wireless receiver gain is reduced by 50%. Testing in this mode assists in determining good mounting locations for the transmitters and verifies that the RF transmission has sufficient signal amplitude margin for the installed system. Transmitters must be programmed before performing this test.

1. Enter the Installer Code and press [5] (TEST) .

   For multi-partition systems, all partitions must be disarmed and in Test mode in order for the RF signal gain to be reduced.
   The keypad will display "Burg Walk Test, Reduced RF Sens."
2. Once transmitters are placed in their desired locations and the approximate length of wire to be run to sensors is connected to the transmitter's screw terminals, fault each transmitter. *Do not conduct this test with your hand wrapped around the transmitter as this will cause inaccurate results.*
   - If a single receiver is used, the keypad will beep three times to indicate signal reception. If two receivers are used, the keypad will beep once if the first receiver received the signal, twice if the second receiver received the signal and three times if both receivers heard the signal (which is desirable for redundant configurations).
   - If the keypad does not beep, reorient or move the transmitter to another location. Usually a few centimeters in either direction is all that is required.
3. Mount the transmitter according to the instructions provided with the transmitter.
4. Exit the mode by entering Installer Code + [1] (OFF) .

Transmitter ID Sniffer Mode

When all transmitters have been installed and programmed, use the Transmitter Sniffer Mode to test that they have all been properly programmed.

1. Enter Installer Code + **# 3**. The keypad will display all zone numbers of wireless units programmed into the system.
2. Fault each wireless zone, causing each device to transmit. As the system receives a signal from each of the transmitters, the zone number of that transmitter will **disappear** from the display.

A transmitter not "enrolled" (5800 series) or with incorrect DIP switch settings (5700 series) will not turn off its zone number.

3. To exit the Transmitter Sniffer mode, enter the Installer Code + [1] (OFF) .

SECTION 9

Relay Outputs & Power Line Carrier (X-10) Devices

This section provides the following information:

- Output Device Basics
- Wiring the 4204 relay module
- Wiring the 4300 transformer

Output Device Basics

Relays and Powerline Carrier devices (i.e., X-10 brand devices) are programmable switches that can be used to perform many different functions. They can be used to turn lights on and off, control sounders, or for status indications. In this system, each device must be programmed as to how to act (ACTION), when to activate (START), and when to deactivate (STOP). Each of these is described in #93 Relay Programming mode

The system supports a total of 32 relays (provided by 4204 Relay modules) and/or Powerline Carrier devices. Each 4204 module provides 4 relays with Form C (normally open and normally closed) contacts.

Powerline Carrier devices are controlled by signals sent through the electrical wiring at the premises via a 4300 (110V) or XF10 (220V) transformer. Therefore, if using Powerline Carrier devices, a 4300 or XF10 transformer *must* be used in the markets using these devices in place of the regular system transformer.

This section is used to programme output devices to activate in response to a programmed **condition.** The system can also be programmed to activate these devices at specific **times** by using the #80 Scheduling Menu Mode–*Time Driven Events* function.

Wiring the 4204 Relay Module

1. Set the 4204 DIP switches for a device address between 01-15 that is not being used by another device (keypads, RF receivers, etc.). If using more than one module, each module must be set to a different address.

The relay module will not operate until the device address you have chosen is enabled in the control's Device Programming mode.

2. Connect the 4204 module(s) to the control's keypad terminals (6, 7, 8, and 9). Use the flying lead cable supplied with the relay module when mounting it in the control's cabinet. Use standard 4-conductor twisted cable when mounting the 4204 outside the cabinet.
3. Directly wire each 4204 back to the panel. The maximum wire run length from the panel to the 4204 must not exceed:

Wire Size	Maximum Length
0.64mm	38m
0.81mm	60m
1.0mm	90m
1.3mm	150m

NOTE: DIP switch position 1 = ON enables tamper protection. OFF disables tamper protection.

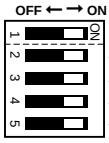

SWITCH POSITION ↓	4204 ADDRESS SETTINGS ("—" means "OFF")															
	0	1	2	3	4	5	6	7	8	9	10	11	12	13	14	15
2	ON	—	ON	—	ON	—	ON	—	ON	—	ON	—	ON	—	ON	—
3	ON	ON	—	—	ON	ON	—	—	ON	ON	—	—	ON	ON	—	—
4	ON	ON	ON	ON	—	—	—	—	ON	ON	ON	ON	—	—	—	—
5	ON	ON	ON	ON	ON	ON	ON	ON	—	—	—	—	—	—	—	—

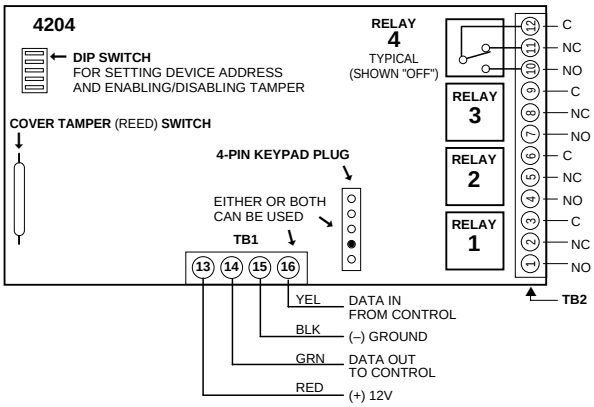

Figure 15: 4204 Relay Module

Wiring the 4300 Transformer

NOTE: Be sure to set data field 1*56 50Hz/60Hz to the appropriate value.

X-10 Powerline Carrier devices are either plugged into standard AC outlets or wired into the AC electrical system by a licensed electrician, depending on the type of device used. They respond to "on" and "off" commands sent from the panel, through the 4300/XF10/XM10E, to the receiving devices. Connect the 4300 transformer as follows:

1. Run a 6-conductor cable between the 4300 interface and the panel. Splice this cable to a 4142TR cable as shown in the diagram below. Note that the white and yellow wires of the 4142TR **must be spliced** together.
2. Set the proper House and Unit Codes for each device following the instructions provided with each device. Note each device's setup, as these codes will be used to programme the devices later.

NOTE: If required, a low-pass filter (available from X-10) can be installed at the exit of the premises AC network to avoid possible conflict with nearby powerline carrier systems.

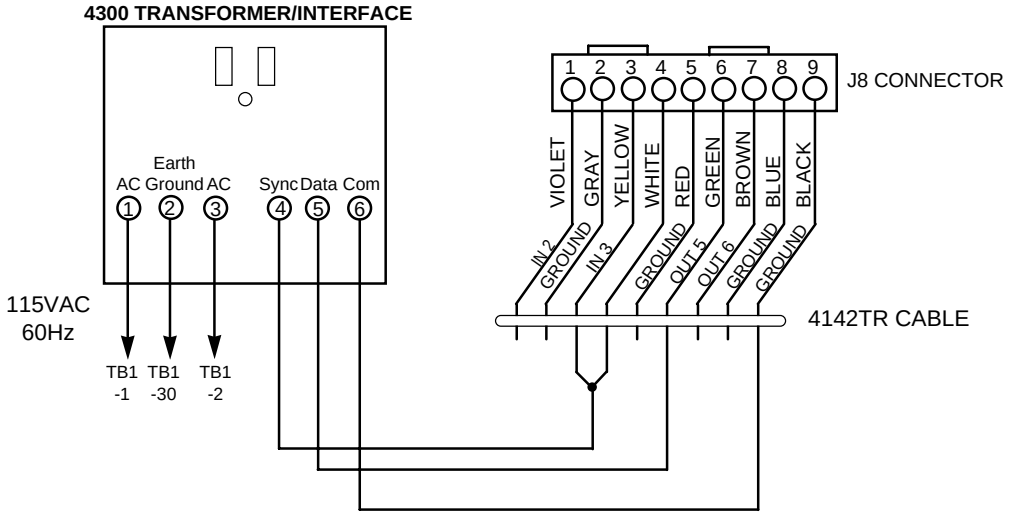

Figure 16a. 4300 Transformer Connections

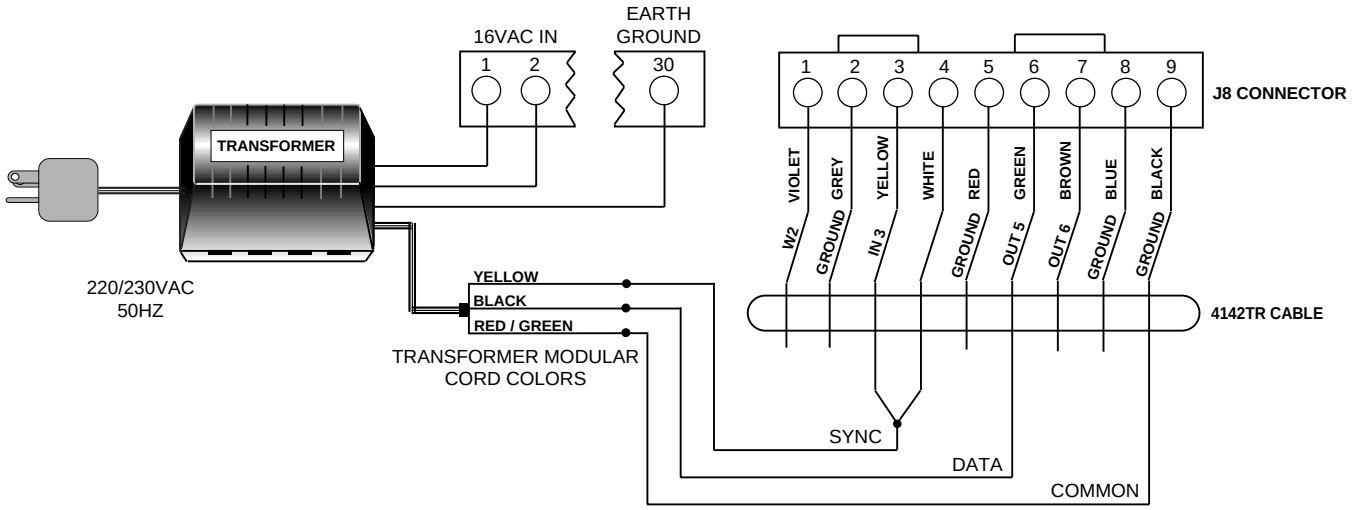

Figure 16b. XF10 Transformer Connections

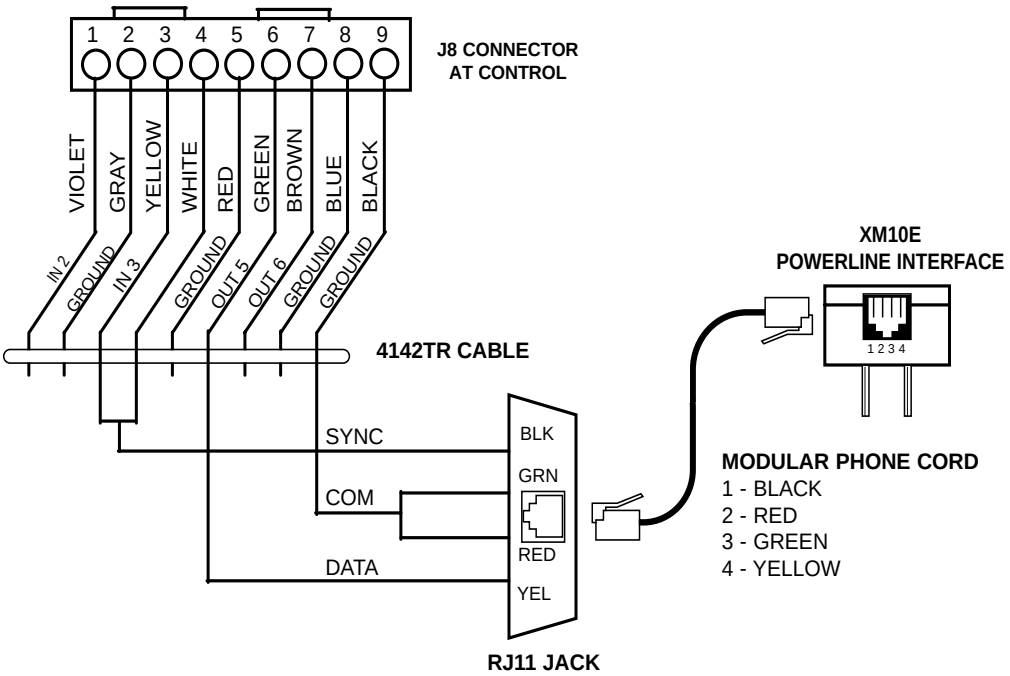

Figure 16c. XM10E Modulator Connections

SECTION 10

4285 Vista Interactive Phone (VIP) Module

This section provides the following information:

- General information about the 4285 VIP module
- Mounting and wiring the 4285 VIP module
- Checkout procedure for the 4285 VIP module

General Information

The 4285 VIP Module is an add-on accessory that permits the user to access the security system and relays via a TouchTone (DTMF multifrequency) phone (either from the premises or by calling the premises from a remote location). This module must be enabled in the #93 Device Programming Mode as device address 4, and must be assigned to a partition.

Only one VIP Module can be used in a security system and partition assignment is done via #93 Menu Mode–Device Programming.

The 4285 VIP Module enables the user to do the following via a DTMF multifrequency telephone:

- Receive synthesized voice messages over the phone regarding the status of the security system.
- Arm and disarm the security system and perform most other commands using the telephone keypad.
- Control 4204 relays and/or Powerline Carrier devices using the #70 relay mode.
- Provides voice annunciation over the phone to confirm any command that is entered.

Facts You Need to Know

- The VIP Module can announce many of the same words that would normally be displayed on a keypad under the same system conditions (see the words in **bold** in the Alpha Vocabulary list found in #93 *MENU MODE PROGRAMMING* section). If the VIP module cannot annunciate a word in a zone descriptor, it will not annunciate the descriptor at all, but will still annunciate the zone number.
- Remote access to the VIP Module can be toggled on and off by using the [Security Code] + # 91 command (see VIP Module instruction manual). You must use the master or installer code only.
- The VIP Module reports trouble as zone 804 (800 + ECP device address 04 = 804) if data communication with the control is lost.
- Detailed operating instructions for phone access to the security system are provided with the VIP Module. In addition, a ***Phone Access User's Guide*** is supplied with the VIP Module for the user of the system.

Mounting the 4285 VIP Module

The VIP Module may be mounted in the control cabinet if space is available or, if this is not possible, on the side of the cabinet or adjacent to it. Pry off the VIP Module's cover prior to wiring.

1. When the VIP Module is mounted inside the control cabinet, attach it to the cabinet's interior surface with double sided adhesive tape. You may leave the module's cover off if it is mounted within the cabinet.

Do not mount the VIP Module on the cabinet door or attempt to attach it to the PC board.

2. When mounting the VIP Module outside the cabinet, use the screw holes at the rear to mount horizontally or vertically (double sided adhesive tape may be used, if preferred). You can bring wires out from the side or back (a round breakout is also available on the back).
3. Affix the 4285 connections label (supplied separately) to the inside of the VIP Module's cover if the cover is used. Otherwise, affix the label to the inside of the *control cabinet's* door.

Wiring the 4285 VIP Module

The 4285 is wired between the control panel and the premises handset(s). It listens for multifrequency (DTMF) tones on the phone line and reports them to the control panel. During on-premises phone access, it powers the premises phones; during off-premises phone access, it seizes the line from the premises phones and any answering machines. Wire as follows:

1. Make 12V (+) and (–) and data in and data out connections from the VIP Module to the control*, using the connector cable supplied with the VIP Module (see below).

RED	6 (AUX +)
BLACK	7 (AUX -)
GREEN	8 (DATA IN)
YELLOW	9 (DATA OUT)

   * These are the same connections as for remote keypads.

   2. Insert the keyed connector at the other end into the mating header on the VIP Module.
2. Connect terminals 1 through 5 on the VIP Module as shown in the VIP Module Connections diagram.

You must use an RJ31X jack (CA38A in Canada) with a direct-connect cord and make all connections ***exactly*** as shown. If the leads on the direct-connect cord are too short to reach their assigned terminals, splice additional wires to them, as required.

Terminal Block Connections

4285 Terminal	Connects to:
1. Phone In (Tip)	Terminal (26) on control.
2. Phone In (Ring)	Terminal (27) on control.
3. Phone Out (Tip)	BROWN lead from direct-connect cord.
4. Phone Out (Ring)	GREY lead from direct-connect cord.
5. Ground	Earth ground terminal (30) on control.
6. Audio Out 1	Future use
7. Audio Out 1	Future use

4285 WIRING NOTES:

1. If multifrequency (DTMF) tones are not present following phone access to the security system *via an on-premises phone*, try reversing the pair of wires connected to terminals 3 & 4 on the 4285, **and** the pair of wires connected to terminals 26 & 27 on the control.
2. Connection to the incoming Telco line via a RJ31X (CA38A) jack and direct-connect cord, as shown in this diagram, is essential, even if the system is not connected to a central station. **The 4285 will not function if this is not done.**
3. The house phone lines must be connected to the VIP Module terminals ***only!*** If they are connected directly to the control panel or to the incoming line, an error tone will be heard when trying to access the VIP Module from an on-premises phone.
4. If the telephone system on the premises includes a Caller ID unit, connect the unit directly to the "Handset" terminals (26 and 27) on the control.

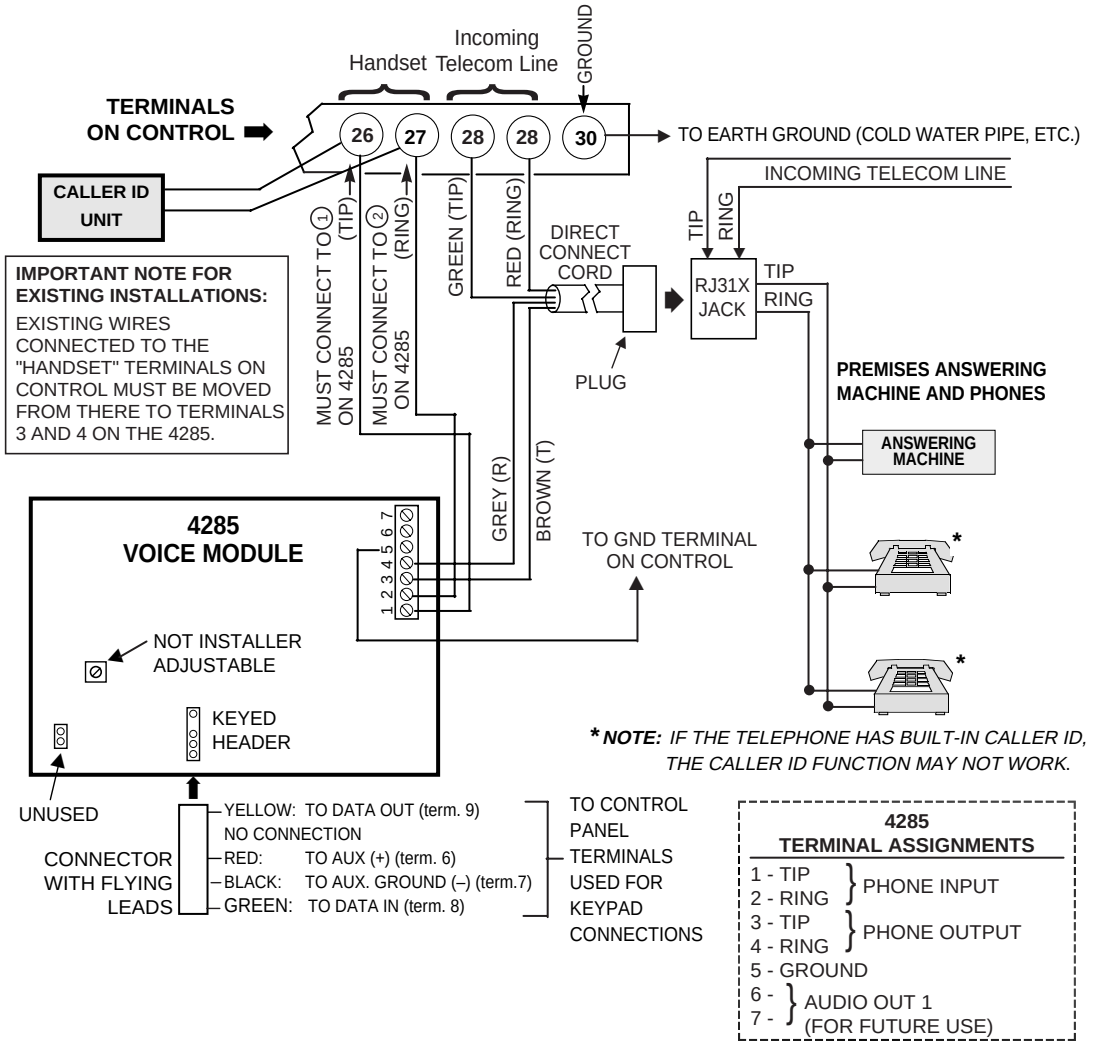

Figure 17. 4285 VIP Module Connections

SECTION 11

Audio Alarm Verification (AAV)

This section provides the following information:

- General information about the AAV option
- AAV operation
- Connecting an Eagle AAV Module

General Information

An Audio Alarm Verification (AAV) module (also known as two-way voice), such as the Eagle 1250, is an add-on accessory that permits voice dialogue between an operator at a central station and a person at the alarm installation, for the purpose of alarm verification. This feature is supported only if alarm reports are programmed to be sent to the primary phone number.

The AAV module connects from module terminals 7 & 8 to the control's zone 5 terminals 16 & 17. The purpose of this connection is to silence and restore the sounders at the premises. It is also used to postpone non-critical dialler reports while the AAV session is in progress. Note that zone 5 is then no longer available as a protection zone. When using the AAV, zone 5 must be assigned a zone response type (e.g. response type 10), and option 1*60 and 1*66 must be selected as 1 to silence sounders on the premises. If 1*60 and 1*66 are not enabled, conversation with the premises will be difficult (too much noise on the premises).

AAV Module Operation

After all messages have been sent during a reporting session to the primary phone number, the control will trigger the AAV if at least one of the messages was an alarm report. If Contact ID format is selected for the primary phone number, and the cancel report field *81 is programmed as non-zero, the control will send a "listen-in to follow" message (event code 606), which signals the 685(rev. 4.6 or higher) to hold the phone connection open for 1 minute.

Once triggering occurs, the control will give-up the phone line to the AAV module, without breaking the connection with the central station. During the time the AAV is active, all sirens and all continuous keypad sounds in all partitions will be shut off if fields 1*60 and 1*66 are enabled. When the AAV indicates that the audio alarm verification session is completed, all keypad sounds will be restored. Sirens will be restored if the alarm timeout period has not expired.

As part of its fail-safe software, the control will limit all audio alarm verification sessions to 15 minutes (this is because once the session begins, the AAV module controls the duration). If a new fire alarm should occur during a session, the control will break phone connection and send the new fire alarm report, then re-trigger AAV mode. All other dialler messages triggered during on-going conversation will be held until either the AAV module signals that it is inactive, or the 15 minute timeout occurs.

One way to trigger the AAV module is by selecting option 3 in field 1*46 and make connections as shown in the *VOLTAGE TRIGGER* diagram. Field 1*46 can be used to set ground start, remote console sounding, or long range radio open/close trigger. If any one of these functions are absolutely necessary in a given installation, the alternative AAV trigger method is via the use of a 4204 relay as shown in the *RELAY TRIGGER* diagram. If this method is selected, the start and stop conditions for that relay must be set to choice 60 = "Audio Alarm Verification" during relay programming, via #93 menu mode.

Some AAV modules allow remote triggering by ring detection at the alarm installation. Please be advised that if this option is selected, it may defeat modem download and 4285 VIP module remote access capability. The DIP switch settings shown on the triggering diagrams disable the remote AAV module trigger option. The control also requires that the AAV module trigger type is falling edge, which is set using the 1250's DIP switches.

1. 685 Receiver software must be rev. 4.6 or higher. Earlier versions will not hold the phone line connection open.
2. Contact ID code for "listen-in to follow" is "606." Contact ID is the only reporting format that will send a "listen-in-to-follow."

Audio Alarm Verification Module Connections

Connect the Audio Alarm Verification module's falling edge trigger input to J7 connector trigger output, *or* to a 4204 relay module, as shown in the various AAV Connection diagrams.

If also using a 4285 VIP Module, be sure to follow the corresponding diagram when making connections.

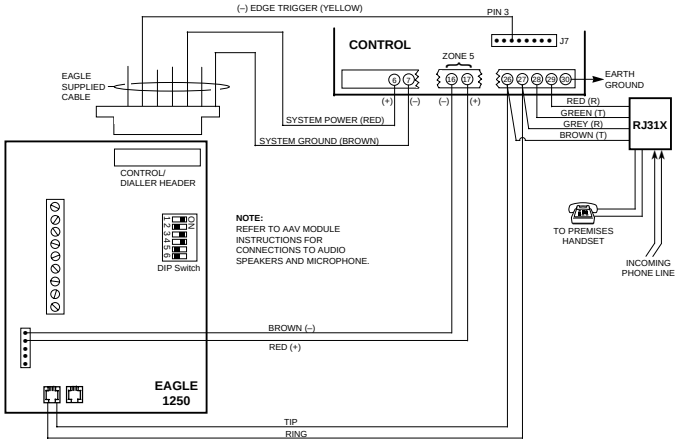

AAV alone

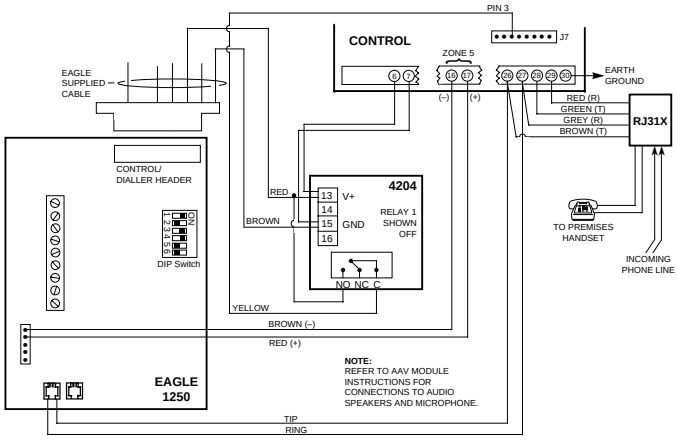

AAV with 4204

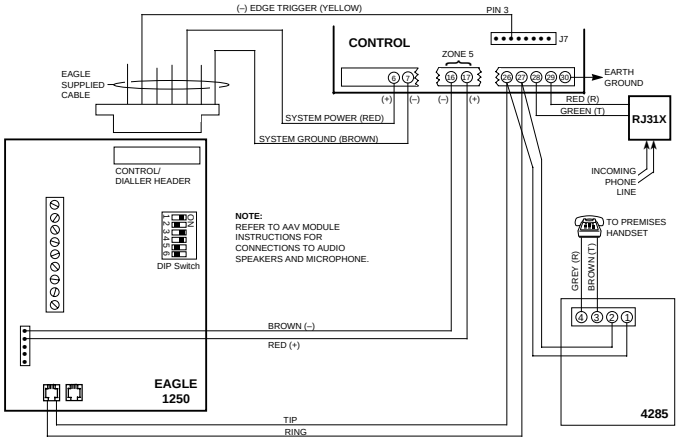

AAV with 4285

Figure 18: Audio Alarm Verification Module Connections

SECTION 12

Video Alarm Verification (VAV)

This section provides only general information about the VAV option. Detailed information is in the manual provided with the VAV Transmitter.

General Information

A Video Alarm Verification (VAV) transmitter (e.g.VTP-50/Transpac receiver) is an add-on accessory that permits video imagery of the area where an alarm was detected to be transmitted on standard switched network telephone lines to the monitoring location using the same phone line and phone call on which the alarm is digitally communicated to the monitoring location.
The VAV transmitter connects to the control's handset telephone line (via a modem) and connects to 2 relays on a 4204 Relay Module: a "kissoff" relay, which signals the VTP-50 to begin communication, and a "hold the line" relay, which holds the phone line for 6 seconds to allow time for the VTP-50 to make connection to the Transpac receiver. In addition, a "camera" relay for each camera is used to trigger the cameras connected to the VTP-50.

Program the 4204 relays as follows:

Device Type = 4 Relay Type = 1 (ECP) ECP Address = (module's device address) Relay Number = (actual relay number used on the module) **Relay "A" (kissoff):** action = 1 (closed for 2 seconds) start zone type = 60 (alarm verification) stop zone type = 60 (alarm verification) **Relay "B" (hold the line):** action = 2 (stay closed) start zone type = 60 (alarm verification) stop zone type = 57 (yyy seconds set in field 1*75; set to 6 sec.) **Relay "C" (camera):** action = 1 (closed for 2 seconds) start event = 1 (alarm) start zone list = "n" (zone list** number containing camera zones for this relay)	**Data Field Programming** *30 = (TouchTone dialing) *33 = primary phone number *41 = 0 (use EOLR) *45 = 1 (Contact ID) *81 = enable cancel reports in order to send verification code (9th entry) *84 = 00 (intermittent sensor disabled) 1*66 = 0 (disable silence of sounders during video alarm verification operation) 1*67 = 1 (must also be selected to assure that Contact ID report Event 609 will be transmitted to the monitoring location after the alarm transmission.) 1*75 = 006 (6 seconds) ** A zone list must be programmed which contains all zone protected by the camera being triggered by the "camera" relay.

VAV Operation

After all messages have been sent to the primary phone number during a reporting session, the control will transmit the VAV report (609) to a 685 (revision 4.73 or higher), which prepares the Transpac receiver to receive images. The "kissoff" relay activates, causing the VTP-50 to begin communication with the Transpac receiver, and the "hold the line" relay activates, giving the VTP-50 time to make connection to the Transpac receiver without breaking connection with the central station. The video image of the areas covered by the zones in the "camera" relay zone list is then transmitted to the Transpac receiver.

New alarms will automatically disconnect the video transmission and will be reported to the central station.

(Connection diagram is for reference only. Refer to the instructions accompanying the video transmitter being used for actual connections.)

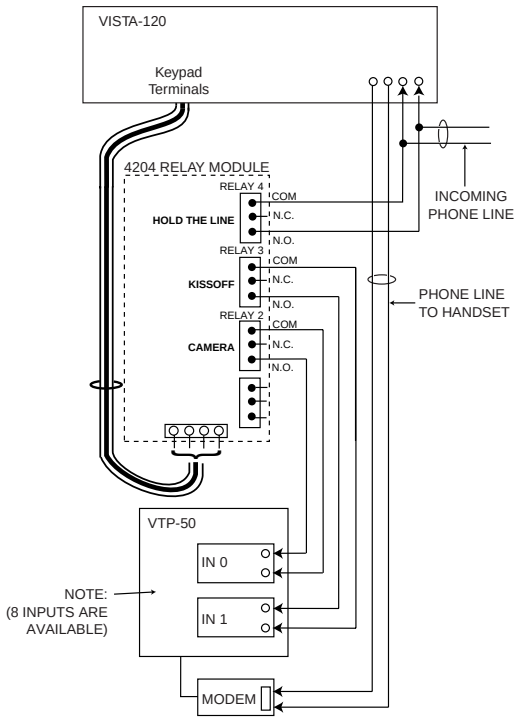

Figure 19. Connections To The Video Transmitter

SECTION 13

Voltage Triggers

This section provides the following information:

- General information about the voltage triggers
- Ground Start trigger setup
- Open/Close trigger setup
- Keyswitch setup
- Remote keypad sounder setup
- Long Range Radio or other transmission media triggering

General Information

Connector J7, located on the right hand side of the main PCB, provides 4 trigger outputs. These outputs may be configured in a number of ways, depending upon the requirements of the installation. They may be used for:

- Operating the 675 Ground Start Module
- Operating the 4146 Keyswitch LEDs
- Operating a remote piezo sounder that imitates the keypad sounder
- Triggering auxiliary alarm signaling equipment (such as long range radio transmitters)
- Operating an Audio Alarm Verification (AAV) module (see previous section on *AUDIO ALARM VERIFICATION*.

These output triggers can be enabled by partition via programming field **2*20**.

The pin assignments of this connector are shown below. Use only the 4142TR 9-wire cable (available as an option) for making connections to this connector.

Output 1:

Operates, by default, as a trigger for the 675 ground start module. This output may optionally be programmed to operate as an open/close trigger, a remote keypad sounder output, or an AAV module output (programmed in data field **1*46**). Only one of these options may be used at a time.

Output 1 Rating: When Activated: 10 - 13.8 VDC through 4K ohms
When De-activated: 100 ohms to ground

Outputs 2 & 4:

Operates, by default, as Fire and Silent Panic/Duress triggers, respectively. These triggers may optionally be programmed to act as Arm and Ready status indicators when it is desired to use the 4146 keyswitch (programmed in data field ***15**). Output 2 can alternatively be programme selected to be a CPU fail output.

Output 2 & 4 Rating: When Activated: 10 - 13.8 VDC through 5K ohms
When De-activated: 1K ohms to ground

Output 3:

Operates as a Burglary/Audible Panic trigger. There are no other options for this output.

Output 3 Rating: When Activated: 10-13VDC through 5K ohms
When De-activated: 1K ohms to ground

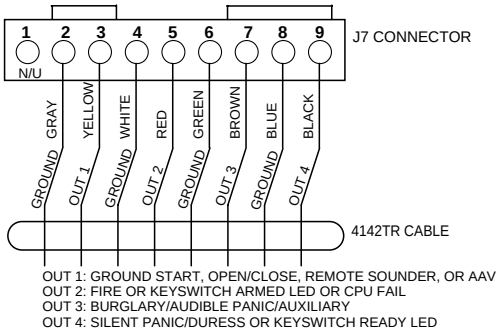

Figure 20: J7 Connector For Voltage Triggers

Ground Start Trigger Setup

Output 1 may be used to trigger an optional 675 Ground Start module for installations having telephone lines which require ground start instead of loop start operation to obtain dial tone from the telecom central office.

When the control has a message to transmit to the central station, it will seize the line, go off hook, and then trigger the 675 module to connect the "RING" side of the telephone line to earth ground. The panel will cause the module to break the connection between "RING" and earth ground when it obtains a dial tone.

1. Connect the 675 Ground Start Module to the panel's J7 connector trigger output 1, to auxiliary power, and to the "RING" side of the telephone line as shown in the diagram below.
2. Use the following procedure to determine which side of the telephone line is the "RING" side:
   a. Connect the "+" lead of a DC voltmeter to earth ground, and the "-" lead to one side of the telephone line.
   b. The wire which reads +50VDC is the "RING" side.
3. Programme field 1*46 must be set to **0**.

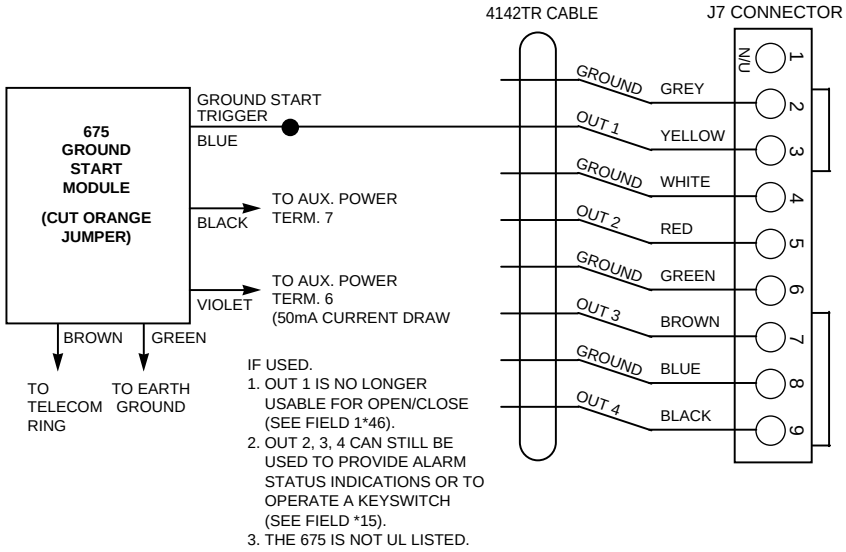

Figure 21. Ground Start Module Connections

Open/Close Trigger Setup

Output 1 may alternately be programmed to change states when the system is armed in the away mode and then disarmed. If field 1*46 is set to **1**, the output will be set high when the system is in the "disarmed" state, and will switch to "0" volts when the system is armed in the "away" mode. This trigger will not change state unless *all* partitions are armed, and will change state again as soon as one partition is disarmed.

Remote Keypad Sounder

Output 1 may alternately be programmed for a remote keypad sounder. You may use an Ademco PAL 328N piezoelectric sounder for installations where you want the sounds produced by the keypad's built-in piezo sounder to be duplicated in another location for one partition. The panel will send all sounds remotely (i.e. alarm, trouble, chime, entry/exit, etc.) except for the short clicks associated with keypad key depression.

One application of this feature might be to produce chime sounds in a location which is distant from the panel's keypads. You can also accomplish this by using relay outputs (see *RELAY OUTPUTS AND POWERLINE CARRIER DEVICES* section).

- Connect the Ademco piezo between the panel's auxiliary power and the J7 connector trigger output as shown in the Remote Keypad Sounding Connections diagram.

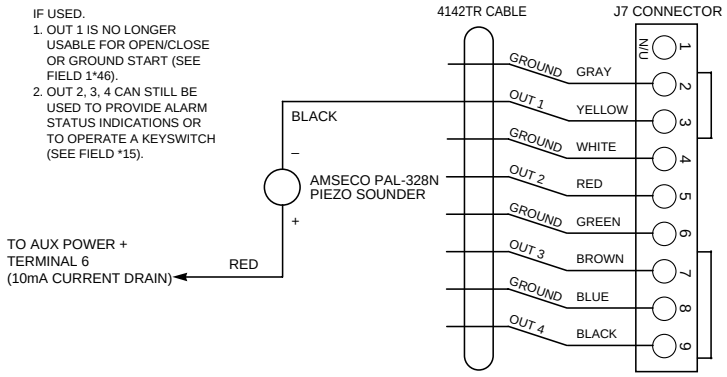

Figure 22. Remote Keypad Sounding Connections

Keyswitch Setup

If using an optional Remote Keyswitch for remote arming and disarming of the system, its switch must be connected to Zone 7 and its Ready and Armed status LEDs must be connected to the trigger outputs and programmed in order to become operational.

Note that a zone 7 keyswitch may be used in one partition only.

The keyswitch must be connected to Zone 7, which is then no longer available as a protection zone. A momentary short across this zone will arm the partition in the "AWAY" mode. If the short is held for more than 3 seconds, the partition will arm in the "STAY" mode. After the partition has been armed, the next time Zone 7 is shorted, the partition will disarm.

1. Connect the 4146 keyswitch's normally open momentary switch to Zone 7.
2. Connect a 2k EOL resistor across the switch regardless of whether or not zones 2-8 are selected to use EOL resistors.
3. Connect the keyswitch Armed and Ready LEDs to the J7 connector as shown.
4. Connect an optional closed circuit tamper switch (ex. No. 112) in series with zone 7.
5. Assign the keyswitch to its appropriate partition in programme field *15. Enable open/close reporting (user #0) for the keyswitch in field *40 (if desired).

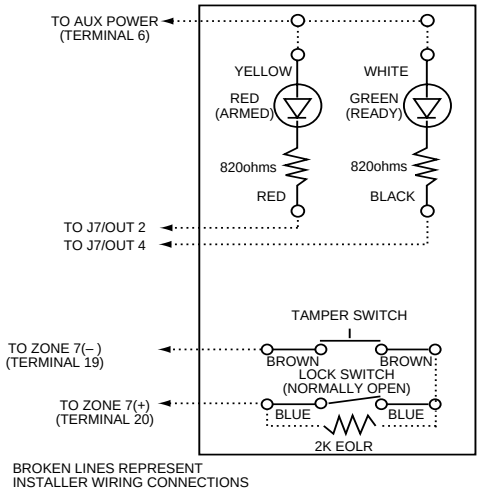

NOTE:
When the keyswitch is removed from the wall, the tamper switch will open causing a fault (trouble or alarm) on zone 7 and causing the panel to disable keyswitch operation until the partition is disarmed from a keypad.

LED indications are defined as follows:

Green	Red	Meaning
Off	Off	Disarmed & Not Ready
On	Off	Disarmed & Ready
Off	On Steady	Armed Away
Off	Slow Flash	Armed Stay
Off	Rapid Flash	Alarm Memory

Figure 23a. Remote Keyswitch Wiring

Keyswitch By Partition Configuration

In addition to being able to support a 4146 keyswitch on zone 7 of the control, you can add one keyswitch per partition via the use of a DPST or a DPDT keyswitch, wherein the key is removable in two positions: AWAY and OFF (disarm). Ademco does not manufacture a packaged keyswitch with status LEDs (if status LEDs are desired, each must be driven by a programmed relay output).

To use this configuration, connect each switch to Ademco's 4193SN 2-zone serial number RPM as shown below.

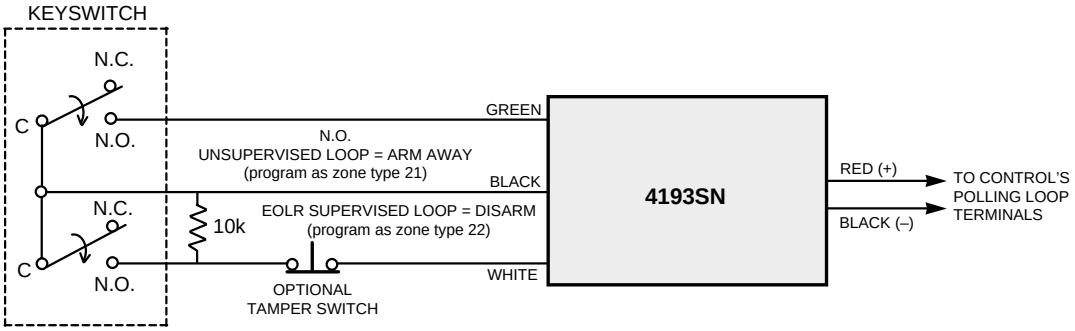

Figure 23b. Keyswitch By Partition Wiring Connections

NOTE: The switch shown is Chicago Lock Company model EXA-112-2.

When the switch is NOT activated or is in the NC position, the partition is armed AWAY. When the switch is activated, the partition is disarmed. The unsupervised loop's zone must be assigned to zone type 21 (arm away) and the supervised loop's zone must be assigned to zone type 22 (disarm).

PROGRAMMING NOTE: Each zone of the 4193SN must be "enrolled" individually, but when the switch is turned, both zones activate. Therefore, before "enrolling" the serial number of a zone of the 4193SN, temporarily disconnect the wire from the side of the switch NOT being enrolled. After that zone is enrolled into the system, reconnect the wire, then temporarily disconnect the other wire to "enroll" the other zone.

Auxiliary Alarm Signaling Equipment

The J7 header provides triggers for fire alarm, burglary/audible panic alarm, silent/duress alarm. These triggers are programmed as the defaults for Outputs, 2, 3, and 4. These may be used to trip auxiliary alarm signaling equipment such as Long Range Radios, Voice Diallers, Direct Wire Transmitters.

The triggers for Fire (Output 2) and Silent Panic/Duress (Output 4) may be used to operate keyswitch armed and ready LEDs *instead* when field ***15** is enabled.

When used as alarm triggers, these outputs are normally low, and go high when the corresponding alarm condition occurs. These triggers remain high until the security code + OFF is entered at the keypad, with the exception of the Silent Panic/Duress trigger, which is a 2-second pulse. The diagram that follows shows how to make connections to the radio.

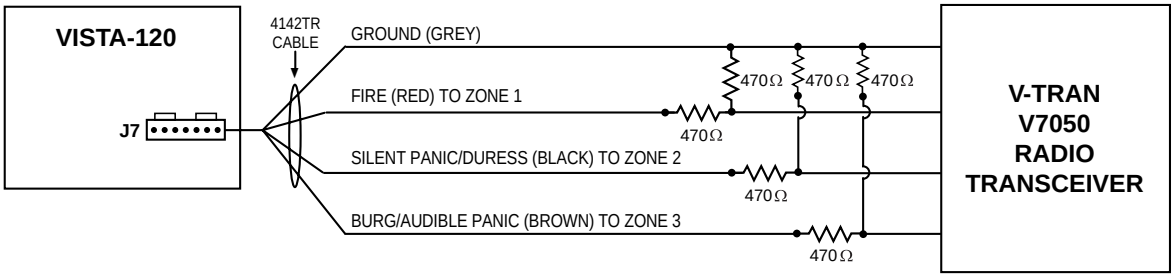

Figure 24: Auxiliary Alarm Signaling Equipment

SECTION 14

External Sounds

General Information

The Control provides one bell/siren relay output used to power external alarm sounders. This output is rated at 10-13.8VDC, 2.8A maximum (including auxiliary current drain).

Exceeding the prescribed current limits will overload the power supply or may possibly trip the bell output circuit protector.

Wiring

Make connections to terminals 4 (positive output) and 5 (negative return).

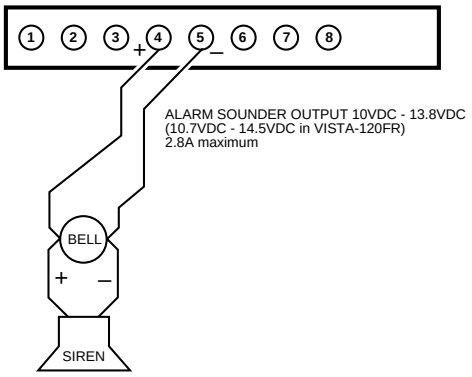

Figure 25. External Sounder Connections

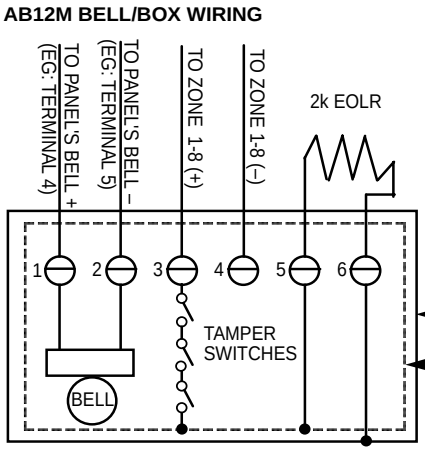

AB12M WIRING NOTES:

- Program the zone which monitors AB12M tamper for day trouble/night alarm (type 05) or 24 hour audible alarm (type 07) response. A 24 hr. alarm response must be used in multiple partition systems.
- Wire the VISTA-120 door tamper switch in series with the AB12M tamper zone.
- Program bell output for 16 or more minute timeout and for confirmation of arming ding.
- All wiring from AB12M to panel must be run in conduit.

AB12M OUTER BOX

INNER LINER

Figure 26: AB12M Bell Box Wiring

The total current drain from this output can be up to 2.8 amps. A battery must be installed since current in excess of 750mA is supplied by the battery. Up to two 702 sirens can be used, wired in series. Up to two 719 sirens can be used wired in parallel.

Programming Option

Programme field *08 permits the external sounder output to be altered so that it is activated normally to charge the battery in a self-actuated external sounder and is interrupted for alarm conditions (continuosly for intrusion/audible panic sounding and pulsed for fire alarm sounding).

Compatible Sounders

702	Outdoor Siren	Self-contained siren (driver built-in) and weatherproof for outdoor use. Can be wired for either a steady or yelp sound and is rated at 120 dB @ 3m. This siren can also be tamper protected, or can be mounted in a metal cabinet (716), which can be tamper protected.
719	**Compact Outdoor Siren**	Compact, self-contained siren (driver built-in), and weather proof for outdoor use. Can be wired for either a steady or yelp sound, and is rated at 90 dB @ 3m. A 708BE cabinet is available, which can be tamper protected if necessary.
747	**Indoor Siren**	Attractive, self-contained indoor siren (driver built-in),
747F		provides steady or warble tones and is rated at 95dB @ 3m.
ABB1031	**Motor Bell & Box**	AMSECO motor bell & box, rated at 81 dB @ 3m.
PA400B (beige) **PA400R (red)**	**Indoor Piezo Sounder**	System Sensor indoor piezo sounder. (red or beige), rated at 90 dB @ 3m.
AB12M	**Armoured Bell**	For High Security Commercial Burglary installations.

SECTION 15

Event Log Options

This section provides the following information:

- General information about the Event Log
- Event Log printer connections
- Displaying/Printing the Event Log

General Information

This system has the ability to record up to 224 events of various types in a history log (224 event capacity). Each event is recorded in one of five categories with the time and date of its occurrence (if real-time clock is set). These categories are:

- Alarm
- Supervisory/check
- Bypass
- Open/close
- System conditions

The log may be viewed (Display Mode) on an alpha keypad, or can be printed (Print Mode) on a serial printer (connected to the system via a 4100SM serial interface module.

Event Log Printer Connections

- Connector J8, located above connector J7 on the right side of the main PC board, provides triggers for powerline carrier devices (see Final Power Up section) and provides pins for connection to a local serial printer via the 4100SM serial interface module, in applications where you want to print the event log on a local printer.
- Mount the 4100SM using its clip bracket to attach it to the side wall of the control cabinet. Make connections between J8, the 4100SM module and the serial printer as shown below. Refer to the event logging commands paragraph for a description of the commands which initiate event log printing.

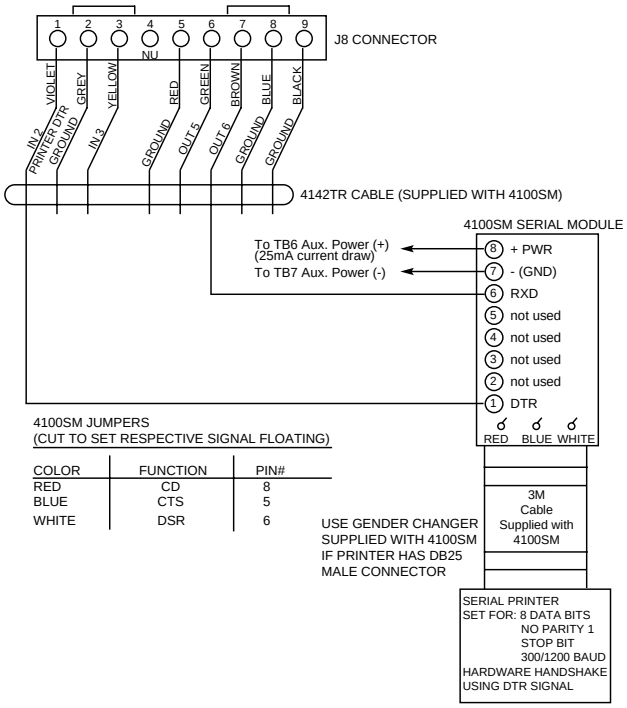

Figure 27. Event Log Printer Connections

NOTES

1. Printer must be configured as follows:
   - 8 data bits, no parity, 1 stop bit
   - 300 or 1200 baud (1200 preferred)
   - Hardware handshaking using DTR signal

2 The 4100SM module package includes a 3m RS232 cable. You can use a longer cable or an extension cable if the Control and serial printer are separated by more than 3m. The total cable length should be less than 15m.

3. Most printers either ignore the CTS, DSR and CD signals, or require them to be high (i.e. 3-15VDC as measured on RS232 DB25 connector pins 5, 6 & 8 respectively with respect to ground pin 7). The 4100SM module sets these pins high. If the printer being used will not operate with these pins high, then clip the blue (CTS), white (DSR) or red (CD) jumpers on the 4100SM module to set the corresponding signal floating. Important pins on the RS232C cable are pin 3 (data out), pin 7 (ground) and pin 20 (DTR - ready).

4. The DTR signal, as measured at 4100SM TB1, should be high (9.5-14VDC) when the printer is powered, properly connected, on-line and ready to print. This signal will be low (0-1.5VDC) when the printer is not powered, not properly connected, off-line or out of paper. The Control will not send data to the printer unless the DTR signal is high.

Event Logging Procedures

In order for proper time and date stamping to occur, the system's real-time clock must be set. Refer to the *SETTING THE REAL TIME CLOCK* section.

If you have selected the printer to be "on-line" (field 1*72), events will print automatically, as they occur. To display or print on demand, the following commands apply:

Commands	
Display Mode:	installer or master code + [#] + [6] + [0]
Print Mode:	installer or master code + [#] + [6] + [1]
Clear Event Log:	installer or master code+ [#] + [6] + [2]
To EXIT Event Log:	Press [✳] at any time.

Display/Printing: After entering either the Display or Print mode, the following will be displayed:

```
ENTER0=RECENT
1=COMPLETE
```

The Event Log holds up to 224 events, and can display or print all events in a category (complete), or only those events in a category occurring since the last Clear Event Log command (recent). Note that once the Event Log is full, the oldest event will be erased upon the logging of any new event. Press the desired display mode key, 0 or 1.

```
SCAN LOG BY PART
0=NO   1-8=PART #
```

The system allows viewing of any partition's event log. Enter the partition number for the partition whose events are to be displayed. Entering 0 (NO) will display all events that occurred in the system regardless of partition. Events are displayed in chronological order, from most recent to oldest.

For display and printing purposes, events are stored on a partition by partition basis (except system events), and are grouped into five categories as follows.

Use the [3] & [1] keys to scroll to the next and previous screens respectively:

ALARM EVENT LOG TYPE CCC UUU	Displays time/date for zones that have either caused an alarm or have been restored in selected partition.
CHECK EVENT LOG TYPE CCC UUU	Displays time/date for zones that have caused a trouble or supervisory condition in selected partition.
BYPASS EVENT LOG TYPE CCC UUU	Displays time/date for zones that have been bypassed in selected partition.
OP/CL EVENT LOG TYPE CCC UUU	Displays time, date and user number for each arming and disarming of the system for the partition selected.
SYSTEM EVENT LOG TYPE CCC UUU	Displays time/date for system problems, such as AC Loss, communication failure, etc., regardless of partition.
ALL EVENT LOG TYPE CCC UUU	Displays all categories of events in chronological order, from most recent to oldest.

To display the events in a particular category, press [8] at the desired category screen.

If in Display Mode, the most recent event is displayed. Press [1] to display older events, press [3] to go forward in time.

If in Print Mode, the first press of [8] will cause the printer to print all events in that category, with each event automatically scrolled on the display keypad. The following is a typical display:

P8 01/01 12:02AM BURGLARY 003	Shows burglary alarm occurred in zone 3 of partition 8, at 12:02AM on January 1.

After the last event in the selected category has been displayed (using either the [1] or [3] keys), the following will appear for a few seconds:

END OF EVENT LOG TYPE CCC UUU

CLEAR EVENT LOG 0=NO 1=YES	Press [1] if Event Log is to be cleared from memory. All events in the log will still be displayed if the COMPLETE option is selected. Only those events occurring from the time of the CLEAR command will be displayed if RECENT display option is selected. Press [0] if event log is **not** to be cleared at this time. If [1] is pressed, the following will appear:
ARE YOU SURE? 0=NO 1=YES	Press [1] if it is desired to clear the event log. Press [0] if event log is not to be cleared.

SCREEN DEFINITIONS

RECENT	Events since last CLEAR
COMPLETE	Displays all events
TYPE	Type of event (Burg., Fire, etc.)
CCC	Zone (contact) number
UUU	User number

EVENT LOG PRINTER and DISPLAY CODES

AC Power Fail	AC LOSS
AC Power Restore	AC RESTORE
Auto Disarm	DISARM-AUTO
Backup Battery Test Failed	BAT TST FAIL
Burglary Alarm	BURGLARY
Burglary Alarm Cancel	CANCEL
Burglary Alarm Restore	BURG RST
Communication Restore	COMM RESTORE
Dialer Restored to Service	DIALER RST
Dialer Shutdown	DIALER SHUT
Disarmed	DISARMED
Duress Alarm	DURESS
Duress Restore	DURE RST
Entry to Test Mode	TEST ENTRY
Event Log	LOG OVERFLOW
Event Log Cleared	LOG CLEARED
Event Log at 50% Capacity	LOG 50% FULL
Event Log at 90% Capacity	LOG 90% FULL
Exit Error Occurred	EXIT ERR
Exit From Programme Mode	PROGRAM EXIT
Exit From Test Mode	TEST EXIT
Failure to Communicate	FAIL TO COMM
Fire Alarm	FIRE
Fire Alarm Restore	FIRE RST
Fire Zone Trouble	FIRE TRB
Fire Zone Trouble Restore	FRTR RST
Intrusion Verify	INTRSN VERIF
Non-Burglar Alarm	AUXILARY
Non-Burglar Restart	AUX RST
Panel is Calling Download Computer	CALL BACK
Panic Alarm	PANIC
Panic Alarm Restore	PNC RST
Poll Loop Restore	EXP RST
Polling Loop RPM Restore	RPM RST
Poll Loop Short	EXP SHRT
Poll Loop Smoke Det. Tested†	TESTED
Poll Loop Smoke Det. Not Tested†	UNTESTED
Poll Loop Smoke Det. Test Failed†	FAILED
Polling Loop Short	EXP TRBL
Polling Loop Tamper	EXP TMPR
Printer Failure	PRINTER FAIL
Printer Restore	PRINTER RST
Programmed Access Schedule Change	ACC SKED CHG
Programme Change	PROG CHANGE
Programme Mode Entered	PROGRAM ENTRY
Programmed Schedule was Changed	SCHEDULE CHANGE
Real-Time Clock was Set	TIME SET
RF Expander Module Fail	RF EXPND
RF Expander Module Restart	RF RST
RF Receiver Trouble	RF TRBL
RF Receiver Trouble Restore	RF RST
RF Transmitter Low Battery	RF LBAT
RF Transmitter Low Battery Restore	RFLB RST
RF Transmitter Low Battery Test	RF LB OK
RF Transmitter/Recvr Supervision Fail	RF SUPR
RF Transmitter/Recvr Supvs, Trble Rest.	RF RST
Scheduled System Arming Failed	ARM FAILED
System Armed	ARMED
System Armed STAY Mode	ARMED-STAY
System Armed by Downloader	ARMED-REM
System Armed Using Quick-Arm	ARMED-QUICK
System Armed with RF Key	ARMED-KEY
System Armed Using Schedule	ARMED-AUTO
System Armed Earlier Than Schedule	ARMED-EARLY
System Armed Later Than Schedule	ARMED-LATE
Sys Batt Fail or Disconnection	BATTERY FAIL
System Battery Restore	LOW BATTERY
System Correction of Internal Time	TIME ERROR
System Did Not Arm Using Schedule	MISS ARM
System Did Not Disarm by Schedule	MISSED DISRM
System Disarmed Remotely	DISARMED-REM
System Disarmed by RF Key	DISARMED-KEY
System Disarmed Earlier than Schedule	DISRMD-EARLY
System Disarmed Later than Schedule	DISRMD-LATE
System Low battery	LOW BATTERY
Supervised Relay Trouble	RLY TRBL
Supervised Relay Restore	RLY RST
System Restored After Shutdown	SYSTEM RST
System Watchdog Timer Reset	SYSTEM RESET
Tamper	TAMPER
Tamper Restore	TMPR RST
Test Report Transmitted	SELF TEST
User Code Added	Uxxx ADD BY
User Code Changed	Uxxx CHG BY
User Code Deleted	Uxxx DEL BY
Zone Bypass	BYPASS
Zone Trouble	TROUBLE
Zone Trouble Restore	TRBL RST

† Occurs after fire walk test activated.

SECTION 16

Final Power-Up Procedure

This section provides the following information:

- Earth ground considerations
- Connecting the AC transformer
- Connecting the backup battery
- Auxiliary and Polling Loop Current Drain Worksheets

General Information

- You can power the control from a 1361 transformer, rated 16.5VAC, 40VA, which plugs directly into a 24 hour, 120VAC, 60 Hz outlet.
- If using power line carrier devices, you can use the 4300 transformer instead in 120VAC, 60Hz countries, and the XF10 in 220/240VAC, 50Hz countries where transformers can be located outside of the control cabinet (e.g. Australia).

Earth Ground Considerations

In order for the lightning transient protective devices in this product to be effective, the designated earth ground terminal (terminal 30), must be terminated in a good earth ground. We recommend using 1.3mm diameter copper wire run at a maximum length of 7.5m. The following are examples of good earth grounds available at most installations:

- **Metal Cold Water Pipe:** Use a non-corrosive metal strap (copper is recommended) firmly secured to the pipe to which the ground lead is electrically connected and secured.
- **AC Power Outlet Ground:** Available from 3-prong power outlets only. To test the integrity of the ground terminal, use a three-wire circuit tester with neon lamp indicators.

Connecting the Transformer

1. Use the Polling Loop Current Drain and Auxiliary Device Current Drain Worksheets found later in this section to make sure that the currents consumed by the devices connected to the system do not exceed the system's respective ratings.

Failure to observe the polling loop current rating will cause polling loop malfunction (CHECK 997 will be displayed). Failure to observe the auxiliary output current rating will result in a battery which does not charge properly or possibly a tripped circuit breaker.

---

2. Connect all installed devices to the control.
3. Wire the transformer to the panel (before connecting the battery) or wire the 4300 or XF10 transformer (if using Powerline Carrier devices) in countries where the transformer can be located outside of the control cabinet (refer to the following diagrams).
4. Plug the transformer into a 24 hour, uninterrupted, AC mains outlet. After a few seconds, the keypad display will appear.

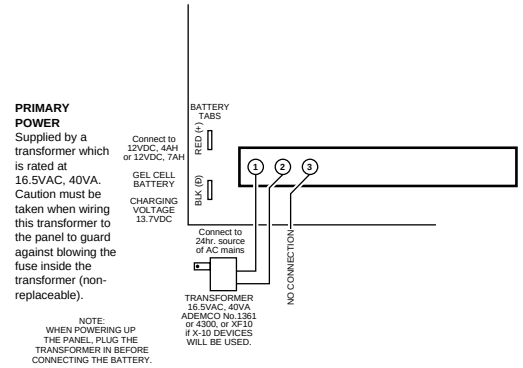

Figure 28. 1361 Transformer and Battery Connections

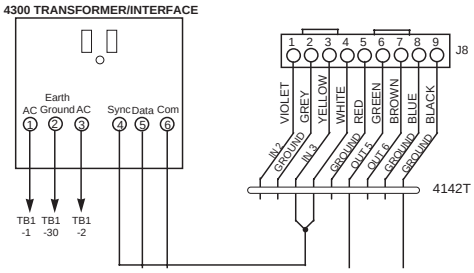

Figure 29a. 4300 Transformer Connections

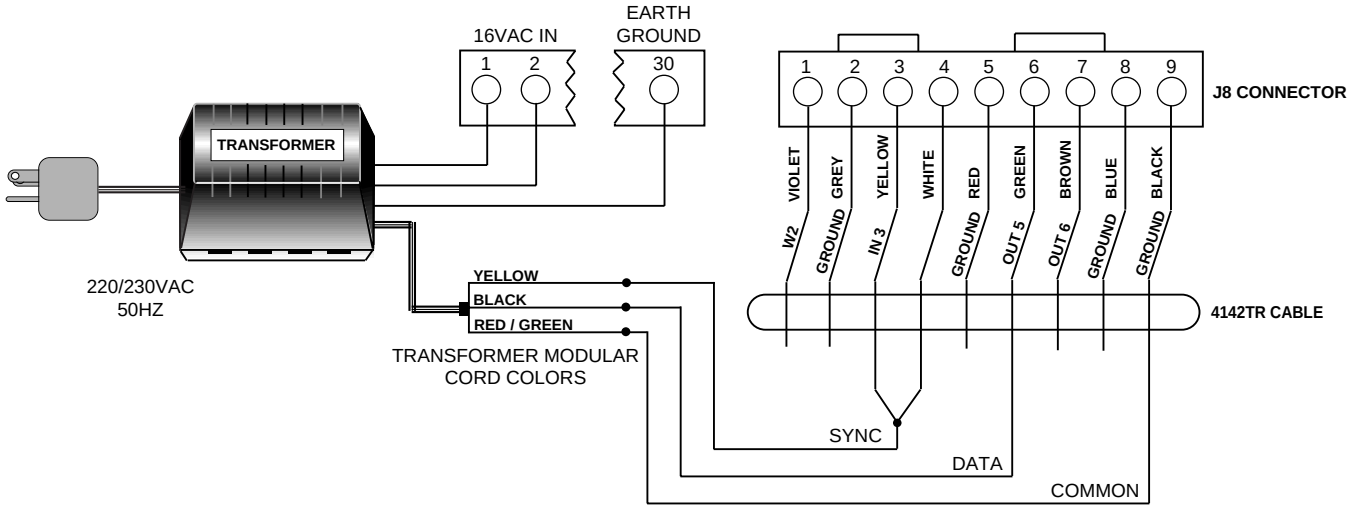

Figure 29b. XF10 Transformer Connections

Connecting The Battery

In the event of an AC power loss, the Control panel will still operate for a period of time (time period varies depending on size of battery used) because the control has a back-up, rechargeable gel type (sealed) lead acid battery. ADEMCO 467 (12V, 4AH) and ADEMCO 712BNP 12V, 7AH batteries are recommended.

The standby battery is automatically tested every 4 minutes for 13 seconds (or every 50 seconds for 1.5 seconds, as a function of programme selection) and every 24 hours for 10 minutes, beginning 24 hours after exiting programming mode. In addition, entry into the test mode will cause a battery test to be initiated. A "SYSTEM LOBAT" indication will display if the battery voltage is low (less than approx. 11.5VDC).

1. Use the Battery Standby Table to select the appropriate battery for the installation.
2. Connect the battery. **Do not connect the battery until all devices have been wired to the control.**

BATTERY STANDBY TABLE

	AUXILIARY STANDBY			
	CURRENT DRAIN			
AMP-HRS.	200mA	400mA	600mA	750mA
4.0	6 hrs.	4 hrs.	3 hrs.	2.5 hrs.
6.0-7.0	11 hrs.	7 hrs.	5.5 hrs.	4 hrs.

NOTE: These figures are approximate, and may vary depending upon the age, quality, and capacity of the battery at the time of the AC mains loss.

Calculating the Battery Size Needed

Use the following formula to determine the battery size needed:

[Total Current Drain (Amps)] X [Number of Hours Standby Needed] = [Battery Ampere Hours].

Example: If the total current drain is 550mA (.55 Amps), and 24 Hr. standby is needed: .55 X 24 = 13.2 Ampere/Hour battery. In this example, two 7 Amp/Hr batteries connected in parallel must be used.

Polling Loop Current Drain Worksheet

RPM DEVICE	CURRENT	# UNITS	TOTAL CURRENT
4194WH Contact	1 mA		
4191SN Contact	1mA		
4193SN	1.5mA		
4293SN	1mA		
4939SN-WH Contact	1mA		
4959SN O/H Door Contact	1mA		
4192SD Photo Smoke Detector	0.4 mA		
4192SDT Smoke w/Heat	0.4 mA		
4192CP Ion Smoke Detector	0.4 mA		
4275EX Dual PIR	1 mA		
4278EX/4278EX-SN Quad PIR	1 mA		
4190 2-Zone RPM	1 mA (LOW) 2 mA (HIGH)		
4208U 8-Zone RPM	29 mA		
4208UXM MK3 8-Zone RPM	25mA		
7500 Glass Break	1.5 mA		
9500 Glass Break	1.5 mA		
998MX PIR	1 mA		
	TOTAL **		

** If the total current drain exceeds 128 mA, a 4297 Loop Extender module must be used. This module is powered by the control's auxiliary power output and provides a separate polling loop output which can support an additional 128mA.

Auxiliary Device Current Drain Worksheet

DEVICE	CURRENT	# UNITS	TOTAL CURRENT
6139 Keypad	100mA		
675 Ground Start Module	50 mA		
Built-in Polling Loop	(total poll loop worksht)		
4281 RF Receiver	35mA		
5881/5882 RF Receiver	50mA		
5882EU RF Transceiver	60mA		
4297 Poll Loop Extender	50 mA		
4204 Relay Module	15mA standby 40mA per active relay		
			TOTAL (750mA max)

* If using wired devices such as PIRs, refer to the specifications for that particular unit's current drain.

SECTION 17

Access Control
(via ADEMCO PassPoint ACS)

This section provides the following information:

- General Information
- Access Control of an Entry/Exit Point
- Wiring the Vista Gateway Module
- Programming the Vista Gateway Module

General Information

The Vista-120 supports the capability to interact with the Ademco PassPoint Access Control System, (PassPoint ACS). The Vista-120 processes fire, burglary, arm, disarm information, etc. The PassPoint ACS processes card reader information and controls the locking and unlocking of doors. The sharing of information between the two systems is provided by the Vista Gateway Module, (VGM).

The VGM is connected between the ECP bus (keypad terminals) of the control and the network bus of the PassPoint ACS, (see figure 14-1). The control sends the VGM its status information, event log entries and entry/exit requests, (inputs programmed with response type Access Point), from wired/wireless keypads, wired zones, and RF transmitters. The VGM then, reformats and retransmits this information to the Main Logic Board, (MLB) on the PassPoint ACS network bus.

The Vista-120 can control access points on the PassPoint ACS.

The PassPoint ACS can control on the Vista-120:

- Relays
- Arming/Disarming Schedules
- Keypad Display
- Time/Date Synchronisation of the Two Systems

See the documentation included with the PassPoint ACS for details.

The PassPoint ACS can dedicate some of its inputs for use as regular Vista-120 wired zones, (zone response type ACS). The PassPoint ACS can also utilise the Vista-120 dialler for reports to the central station.

Access Control of an Entry/Exit Point

The control can send entry and exit requests to the PassPoint ACS utilising keypads, wired zones, and RF transmitters. A zone is programmed with a response type 27, (Access Point) and an appropriate input type, (wired/wireless keypad, wired zone, RF zone).

Using the Alpha Keypad

There are three entries that can be entered at the keypad to provide access to a door.

- Code + #73 (unlocks door for time programmed in ACS software)
- Code + #74 (prompts for specific point to be unlocked)
- Code + #75 (prompts for specific point and desired function)
  This entry requires the VGM and the PassPoint ACS. The functions available are Grant, Protect or Bypass. Grant temporarily unlocks a door to force an access. Protect unlocks the door only when a valid access is received. Bypass permanently unlocks the door to allow continuous access.

Programming the Keypad

1. Enter the ZONE PROGRAMMING section in the #93 Menu Mode.
2. Programme the zone with a response type 27 (Access Point).
3. Enter the access point number (00-31) of the door and indicate whether this is an entry or exit keypad.
4. Enter the partition number,
5. Enter the input type as Keypad Input (09)
6. Enter the keypad ecp address.

See the ZONE PROGRAMMING section for a detailed explanation.

Using an RF Transmitter Zone

An RF button type transmitter (5804/5804EU), can be used to provide access to or egress from up to 4 doors. One button will control one door. Also a button can be used to provide access or egress due to a panic or duress condition.
An RF transmitter (5816/5816EU) can be used with a remote switch to provide an exit in case of a fire alarm.
The PIR (5890/5888EU) can be used to provide exit while preventing entry through a door.
The smoke detector (5808/5808EU), can be used to provide egress in emergency situations.

Programming the RF Transmitter

1. Enter the ZONE PROGRAMMING section in the #93 Menu Mode.
2. Programme the zone with a response type 27 (Access Point).
3. Enter the access point number (00-31) of the door.
4. Enter whether RF device is for entry or exit.
5. Enter the partition number
6. Enter the input type supervised RF (03), unsupervised RF (04), or button RF (05).
7. Enter the loop number
8. Enroll the serial number.

See the ZONE PROGRAMMING section for a detailed explanation.

RF buttons and pendants must be assigned to a user number in order to function. See the USER ACCESS CODES section for the procedure.

Wireless Keypads

The wireless keypads (5827 & 5827BD) can provide another way of entering or exiting the premise. They function the same as the alpha keypads, except when the code + # 73 is entered. This entry will momentarily allow access to ALL access points in the partition to which the keypad is assigned

Programming the Wireless Keypad

1. Enter the partition to which the keypad is assigned in field 1*48.

Using ACS Zone Inputs

If the PassPoint ACS has uncommitted zones, these may be used by the Vista-120 as wired zones.

Programming the ACS Zone Inputs

1. Enter the ZONE PROGRAMMING section in the #93 Menu Mode.
2. Programme this zone as any other zone and indicate the input type as ACS (10).
3. Enter the PassPoint ACS's zone ID (00-31).

See the ZONE PROGRAMMING section for a detailed explanation.

Control of Lighting and Appliances

Lighting and appliances can be controlled when an access or exit event occurs. Lights or appliances can be automatically turned on or off when a valid entry or egress request is presented at an access point. The Vista-120 relays or the ACS relays or triggers would be used with keypads and/or RF transmitters whose response type is Access Point (27) to control these devices.

Programming the Control of Lighting and Appliances

1. Enter the RELAY PROGRAMMING section in the #93 Menu Mode.
2. Programme all the information for the relay
3. Select the relay type, ECP (1) for the 4204 and X10 (2).

See the RELAY PROGRAMMING section for a detailed explanation.

Access Control Dialler Events

All PassPoint ACS events can be sent to the Vista-120's dialler via the VGM. These events will also be logged into the control's event log. This is enabled in the PassPoint ACS. *See the PassPoint ACS documentation for a detailed explanation.*

Wiring the Vista Gateway Module

The Vista Gateway Module is connected between the ECP bus, (Vista-120 keypad terminals) and the network bus of the PassPoint Access Control System. See Figure 30 for the proper wiring connections:

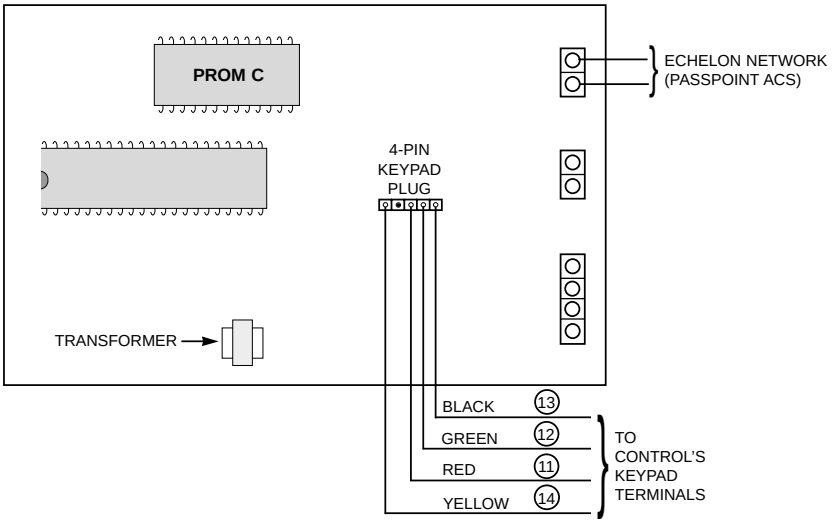

Figure 30 Wiring the Vista Gateway Module

Programming the Vista Gateway Module

Set the VGM's ecp address by running the ACSTERM, which configures the PassPoint ACS. *See the PassPoint ACS documentation for a detailed explanation.*

1. Enter "M" (menu mode), and then an 8 digit user code.
2. Select (1<ENTER>),
3. Configure the access system
4. Enter programme mode (1<ENTER>).
5. Select configure modules (3<ENTER>)
6. Go to the module number that the VGM is located at on the Echelon Bus of the PassPoint ACS. This screen will have arbitrary dialler information displayed. Ignore this screen.
7. Enter (<CTRL>Z). This screen contains the VGM ecp address entry.
8. Enter the desired ecp address. This address must match the address programmed in the DEVICE PROGRAMMING section of the #93 Menu Mode of the Vista-120.

PART 2

PROGRAMMING THE SYSTEM

SECTION 18

The Mechanics of Programming

This section provides the following information:

- Using Data Field Programme Mode
- System and communication defaults
- Entering Data Field Programme Mode
- Moving from one level (page) of programme fields to another
- Entering and viewing data fields
- Programming partition-specific data fields
- #93 Menu Mode Programming

Using Data Field Programme Mode

Data Field programme mode is the programme mode through which many system options are programmed. The field numbers on the programme form show the number of entries required for each field. When an entry is completed, the keypad "beeps" three times and advances to the next field. At this point, you can either make the required entry in the new field, or press [*] + the next field number you want to programme.

There are several "question and answer" modes, which we call "Menu" modes that can be accessed once Data Field programme mode has been entered. These modes prompt the user for information.

System and Communication Defaults

- The system is shipped with a set of pre-programmed default values that are designed to meet the needs of many installations. These can be changed by the installer to suit specific needs if desired.
- There are four sets of pre-programmed communication defaults available, including Low Speed, 4+2 Express, Ademco High Speed, and Ademco Contact ID. Loading one of these defaults automatically programs industry standard codes that will suit most of your needs.
- These defaults can be changed directly from the keypad, or they can be changed by using V-LINK downloading software (be sure that the software version used includes a VISTA 120 with scheduling menu selection). Downloading can be performed either remotely from an IBM compatible computer (using an approved modem) or at the job site (direct-wire download using the 4100SM Serial Module)

The factory loaded defaults (*97) enable keypad addresses 00-03 only. A keypad set to one of these addresses must be used to programme the system.

Entering Data Field Programming Mode

1. Enter programme mode using either method A or B:

   A) Press both the [*] and [#] keys at the same time within 30 seconds after power is applied to the Control.

   B) Enter the [Installer Code] + [8] + [0] + [0] + [0] keys. The factory installer code can be changed once in the programme mode (field *00).

Local keypad programming can be disabled through V-Link downloading software. If this is done, programming can only be accomplished via the downloading software.

2. After entry into the programme mode, the following will be displayed:

Program Mode *Fill # View -00

3. Following this display, enter ✳ and the first field number to be programmed.

Enter the first field number to be programmed (ex. *00, installer's code) and make the desired entry. When the field is complete, the keypad will normally "beep" three times and will advance to the next field. If you do not desire to change the next field, press [✳]and the next field number to be programmed.

First Page of Fields (*00-*90)

press *99 or *98 to exit programme mode

Moving from One Page of Programming to Another

- The data fields are grouped into three levels (referred to as "pages"). The first page is accessed as soon as programming mode is entered.
- The second and third pages of data fields are indicated at the keypad by a "1" or "2" respectively in front of the 2-digit field address. The words "ALT PROGRAM MODE" along with a "100" or "200", depending on which page of programme fields is accessed, to indicate the higher page of fields.

1. To access the next level of fields, press *94.
2. Then press [✳]+ [XX], where XX=the last two digits of the programme field, and make the desired entry.
3. To return to the previous page of fields, press *99.

press *94 to move to 2nd page **press *99 to move back to 1st page**

Second Page of Fields (1*01-1*77)

press *94 to move to 3rd page **press *99 to move back to 2nd page**

Third Page of Fields (2*00-2*24)

Viewing Data Fields

To view the contents of a data field, press [#] plus the 2-digit field address. The field's entries will be displayed, but no changes can be made.

Entry Errors

- If an address is improperly entered, the keypad will display FC.
- If a programme entry is improperly entered (for example, a larger number than that which is permitted), the keypad display will go blank.
- In either of the above cases, simply re-enter ✳ + the correct field number.

	SUMMARY OF DATA FIELD PROGRAMMING COMMANDS
***94**	Next page of fields
***99**	Previous page of fields or exit programming mode with no installer lockout
***91**	Select partition for programming partition-specific fields
***98**	Exit programming mode with installer lock-out

Programming System-Wide Data Fields

Values for some programming fields are system-wide (global), and some can be different for each partition (partition-specific). Note that the partition-specific programming fields are automatically skipped when programming the global fields. If the system has only 1 partition, the partition-specific fields *will not* be automatically skipped. To programme system-wide data fields, do the following:

1. Enter Programme Mode: Installer code + **8 0 0 0**.
2. When the programme screen is displayed, press ***00** to begin programming the Installer Code data field.
   When you have completed the entry, the keypad sounds three beeps and automatically displays the next programme field in sequential order.
3. To programme specific data fields out of sequence, press [✳] plus the 2-digit field address of the field number you want to programme, then make the required entry.
   If the number of digits that you enter in a data field is less than the maximum permitted (ex. phone number), the keypad displays the last entry and waits.

To proceed, enter ✳ + the next data field you wish to programme (ex. press *05).
Partition-Specific programming fields are skipped.

4. To change to the next page of fields, press ***94**.
   To return to the previous page of fields, press ***99**.

Programming Partition-Specific Data Fields

To program partition-specific data fields once in programme mode, do the following:

1. Press ***91**, which will prompt you for the partition number desired.
2. Enter a partition-specific field number (ex. *09) to begin programming. When the first field's entry is completed, the next partition-specific field will automatically be displayed. When all partition-specific fields are programmed, the system returns to the global programming fields (page 1 fields). To return to the global programme fields before finishing all fields, enter any global field number.
3. Repeat this procedure for each partition in the installation.

PROGRAMMING PARTITION-SPECIFIC FIELDS

Press *91 to select a partition

↓

Enter the partition to be programmed

↓

Enter a partition-specific field # and make entry

↓

After partition -specific fields are programmed, press *91 to select next partition.

Enter any global field number to return to the global fields at any time.

#93 Menu Mode Programming

The #93 Menu Mode is a mode through which much of the system's programming is done. It offers main menu selections for the following:

Zone Programming
Serial Number Programming
Alpha Programming
Device Programming
Relay Programming
Relay Voice Descriptors
Custom Index Programming (VIP Module substitute words)

Press 0 (NO) or 1 (YES) in response to the displayed menu selection. Pressing 0 will display the next choice in sequence. The keypad will then prompt you with questions regarding the programming of a particular zone or device.
The following is a list of commands used while in the menu mode.

#93 Menu Mode Key Commands

#93	Enters Menu mode
[✳]	Serves as ENTER key. Press to have keypad accept entry.
[#]	Backs up to previous screen.
0	Press to answer NO
1	Press to answer YES
00+[✳]	Escapes from menu mode, back into data field programming mode, if entered at the first prompt of each main menu option.

SECTION 19

Zone Index & Zone Type Definitions

This section provides the following information:

- Zone number designations
- Zone Type Definitions

Zone Index

The VISTA-120 has 128 physical zones, as well as supervisory zones for relays, ECP devices (devices which communicate through the keypad terminals), and system troubles. These zones are designated as follows:

ZONE No.	ZONE FUNCTION	ACTUAL ZONE
001 - 128	Protection zones	As indicated
601 – 696	Relay zones (to supervise relay, use the Zone Programming menu to enter response type 5 or 19 for that relay's zone number)	6 + 2-digit relay number (e.g. relay number 03, if supervised, is zone 603
800 - 830	ECP Device Supervisory Zones (includes keypads, wireless receivers, VIP Module, relay modules, etc.)	8 + 2-digit Device Address, e.g., Device Address 01, if supervised, is zone 801. The 4285 VIP module is zone 804 (since its Device Address must be set to 4).
900 - 990 & 997	System Supervisory Zones	988: 2nd Wireless Receiver - not receiving signals 990: 1st Wireless Receiver - not receiving signals 997: Polling Loop overload
995, 996, 999	Keypad Panics	995: 1+✳ panic (A key) 996: 3 + # panic (C key) 999: ✳ + # panic (B key)

Response types for zones are enabled in #93 Menu mode Zone Programming. Supervisory zones should be given a response type of either 19 (24-Hr. Trouble) or 05 (Trouble-by-Day, Alarm-by-Night).

Zone Response Type Definitions

Each zone must be assigned a zone response type, which defines the way in which the system responds to faults in that zone. In addition, there are three keypad activated zones (PANIC keys) for each partition, a polling loop supervision zone, and two RF supervisory zones, one for each RF Receiver installed. The following table lists the zone numbers and the types of sensors that can be used with each in this system:

Zone	Sensors
1	2-wire smoke detectors (if used)
7	keyswitch (if used)
8	latching type glass break detectors (if used)
1-9	traditional wired zones
1-63	5700 series wireless devices
1-128	5800 series wireless devices
10-128	polling loop devices
995	*/1 (A key) panic
996	#/3 (C key) panic
999	*/# (B key) panic

Zone types are defined on the next page.

ZONE RESPONSE TYPE DEFINITIONS

Type 00: Zone Not Used

Programme a zone with this zone type if the zone is not used.

Type 01: Entry/Exit #1 Burglary.

This zone type provides entry delay whenever the zone is faulted if the control is armed in the Away or Stay modes. When the panel is armed in the Instant or Maximum modes, no entry delay is provided. Exit delay begins whenever the control is armed, regardless of the arming mode selected. These delays are programmable. This zone type is usually assigned to sensors or contacts on doors through which primary entry and exit will take place.

Type 02: Entry/Exit #2 Burglary.

This zone type provides a secondary entry delay whenever the zone is faulted if the panel is armed in the Away and Stay modes. When the panel is armed in the Instant or Maximum modes, no entry delay is provided. Secondary exit delay begins whenever the control is armed, regardless of the arming mode selected. These delays are programmable. This zone type is usually assigned to sensors or contacts on doors through which more time is needed to get to and from the keypad. Delay times for this zone type must be greater than Zone Type 01. (Ex.: a garage, loading dock, or basement door)

Type 03: Perimeter Burglary

This zone type gives an instant alarm if the zone is faulted when the panel is armed in the Away, Stay, Instant or Maximum modes. This zone type is usually assigned to all sensors or contacts on seldom used exterior doors and on windows.

Type 04: Interior, Follower.

This zone type gives a delayed alarm (using the programmed Entry /Exit time) if the Entry/Exit zone is faulted first. Otherwise this zone type gives an instant alarm. This zone type is active when the panel is armed in the Away or Maximum modes. Maximum mode eliminates the entry delay. **This zone type is bypassed automatically when the panel is armed in the Stay or Instant modes**. This zone type is usually assigned to a zone covering an area such as a foyer, lobby, or hallway through which one must pass upon entry or exit(After faulting the entry/exit zone to reach the keypad to disarm the system.) Since this zone type is designed to provide an instant alarm if the entry/exit zone is not violated first, it will protect an area in the event an intruder hides on the premises prior to the system being armed, or gains access to the premises through an unprotected area.

Type 05: Trouble by Day/Alarm by Night.

This zone type will give an instant alarm if faulted when armed in the Away, Stay, Instant or Maximum (night) modes. During the disarmed state (day), the system will provide a latched trouble sounding from the keypad (and a central station report, if desired). This zone type is usually assigned to a zone which contains tamper switches, or to a zone covering a "sensitive" area such as a stock room, drug supply room, etc. This zone type can also be used on a sensor or contact in an area where immediate notification of an entry is desired. There are programming options to prohibit bypass of this zone type except by installer and to prohibit restoration of the system (or partition) to the disarmed, ready to arm state subsequent to a trouble or alarm condition related to this zone type, except by the installer.

Type 06: 24-hour Silent Alarm.

This zone type sends a report to the Central Station but provides no keypad display or sounding. This zone type is usually assigned to a zone containing an Emergency button.

Type 07: 24-hour Audible Alarm.

This zone type sends a report to the Central Station, and provides an alarm sound at the keypad, and an audible external alarm. This zone type is usually assigned to a zone that has an Emergency button.

Type 08: 24-hour Auxiliary Alarm.

This zone type sends a report to Central Station and provides an alarm sound at the keypad. **(No bell/siren output is provided).** This zone type is usually assigned to a zone containing a button for use in personal emergencies, or to a zone containing monitoring devices such as water sensors, temperature sensors, etc.

Type 09: Supervised Fire. (No Verification)

This zone type provides a fire alarm on short circuit and a trouble condition on open circuit. The bell/siren output will pulse when this zone type is shorted. This zone type is always active and cannot be bypassed. **This zone type can be assigned to any wired zone except zone 9, and can be assigned to certain wireless system zones.**

Type 10 : Interior w/Delay.

This zone type gives entry and exit delays (using the programmed entry/exit time), if tripped when the panel is armed in the Away mode. This zone type is also active during Maximum mode, but no entry delay is provided (alarms occur immediately if zone is tripped). **This zone type is bypassed when the panel is armed in the Stay or Instant modes.** Delay begins whenever sensors in this zone are violated, regardless of whether or not an entry/exit delay zone was tripped first. If an entry/exit zone is not tripped first, the entry/exit delay for a type 01 zone is used.

Type 19: 24 Hour Trouble

An open or short on a zone with this zone type causes a trouble response. No external alarm sounders are activated.

Type 20: Arm-Stay*

This is a special purpose zone type used with 5800 series wireless pushbuttons or a enroll mode polling loop device, and which will result in arming the system in the STAY mode when the zone is activated.

Type 21: Arm-Away*

This is a special purpose zone type used with 5800 series wireless pushbuttons or a enroll mode polling loop device, and which will result in arming the system in the AWAY mode when the zone is activated.

Type 22: Disarm*

This is a special purpose zone type used with 5800 series wireless pushbuttons or a enroll mode polling loop device, and which will result in disarming the system when the zone is activated.

Type 23: No Alarm Response

This zone type can be used on a zone when an output relay action is desired, but with no accompanying alarm (ex. lobby door access). There are programming options to event log and communicate zone faults for this zone type.

* Note that these zone types are for use by 5800 series devices or serial numbered polling loop devices *only*.

Type 27: Access Point

This zone type can be used on zones that are to signal to the Ademco Passpoint ACS to request unlatching of a door lock linked to this zone.

Type 28: Main Logic Board (MLB) Supervision

This zone type assigns a zone to supervise the ACS MLB. If communication between the MLB and the Vista Gateway Module (VGM) fails, this zone will be displayed on the keypad as having a "CHECK" condition. Also, if this zone fails, all Access Control System, (ACS) input zones will display "Check".

NOTE FOR PANIC KEYS: Keypad panic zones share the same zone response type for all 8 partitions, but panics may be individually enabled for each partition.

IMPORTANT! FAULT ANNUNCIATION
Polling loop and RF troubles (zones 988, 990 & 997) will report as trouble conditions only, and as such, should be assigned zone type 05 if annunciation is desired. See SUPERVISION notes in POLLING LOOP and WIRELESS EXPANSION sections for more information.

Zone Type Defaults

Following are the zone type defaults for zones on the VISTA-120:

Zone No.	Zone Type
001	09
002	09
003	03
004	03
005	03
006	03
007	03
008	03
009–128	00
601-632	05
800–831	00
988	00
990	00
995	00
996	00
997	19
999	06

SECTION 20

Data Field Descriptions

The following is a description of all data fields provided by this control. Make entries as described for each field.

*00 INSTALLER CODE [| | |]

0001-9999 = 4-digit installer's code

The Installer's Code is reserved for installation company use, and is the only code that can be used to enter Programme mode from the keypad. This code cannot be used to disarm the system if it was not used to arm the system. This code cannot reenter programming mode if exited by the *98 command.

*01 INSTALLER CODE RESTRICTION [0] ☐

1= Yes,Master Code keying opens a 15 second time window in which the Installer Code can be used (Norwegian requirement)

0= No, normal usage of Installer Code during disarmed period

*03 FINAL CONTACT SET (partition-specific) [0] ☐

1= Yes, the exit delay will be infinitely long and the system will arm 5 seconds after the Zone Type 01 exit door opens and closes or closes if already open and that condition was allowed prior to arming

0= No

*04 AUTOBYPASS EXIT ROUTE FAULTS (partition-specific) [0] ☐

1= Yes, autobypass of unsealed burglary zones after a 2nd attempt to arm within 15 seconds after arming is rejected and the open zones are displayed (Swedish requirement)

0= No

*05 ARM WITH LOW BATTERY [0] ☐

1= Yes, allowing the user to override a system low battery condition and arm the system or a partition

0= No, arming is prohibited when a low system battery is present (ANPI requirement)

*06 ZONE TYPE 5 ALWAYS ALARM [0] ☐

1 = fault of a type 5 (tamper) zone shall cause a full alarm in any arming mode (disarmed or armed)

0 = fault in a type 5 zone shall cause a trouble in the disarmed state and a full alarm in any armed mode

*07 ALLOW ARMING WITH FAULTS IN EXIT ROUTE [0] ☐

1 = arming can proceed with zone faults present in any of the exit route zones (zone types 1, 2, 4 and 10), wherein a fault remaining in any of these zone types at the end of exit delay (for AWAY/MAXIMUM arming and in zone types 1 and 2 for STAY/INSTANT arming) will result in a burglary alarm. Automatic bypass of the faulted zones is achieved (instead of alarm) if field 1*20 is also enabled.

0 = all zones must be intact in order for arming to take place

*08 SELF ACTIVATING SIREN OUTPUT [0] ☐

1= Yes, alarm output is normally activated and turns off during alarms (ANPI requirement)

0= No, alarm output is normally off and activates during an audible alarm

***09** **ENTRY DELAY #1** (partition-specific) [02] [|]

01-15 times 15 seconds
00 = no delay
Entry delay defines the delay time which allows users to reenter the premises through a door that has been programmed as an entry delay door (zone type 01)and disarm the system without sounding an alarm. The system must be disarmed within this period or an alarm will occur. Maximum delay of 225 seconds (entry **15** times 15 seconds).

***10** **EXIT DELAY #1** (partition-specific) [03] [|]

01-15 times 15 seconds
00 = no delay
Exit delay defines the delay period that allows users to leave the premises through a door that has been programmed as an entry/exit delay door(zone type 01) after arming the system without setting off the alarm.), up to a maximum delay of 225 seconds.

***11** **ENTRY DELAY #2** (partition-specific) [06] [|]

Entry Delay 2 is used for the zone assigned to Entry Delay #2 zone type. Note that this delay must be longer than Entry Delay #1.

***12** **EXIT DELAY #2** (partition-specific) [08] [|]

Exit delay 2 is used for the zone assigned to Exit Delay #2. Note that this delay must be longer than Exit Delay #1.

***13** **SOUNDER TIMEOUT** (partition-specific) [02] [|]

01-15 minutes
Defines the length of time an external sounder and the keypad's sounder will sound for all audible alarms. This duration can be overridden by the Fire Timeout Disable option (field *21) for fire alarms.

***14** **ZONE 9 RESPONSE TIME** [0] [ ]

1 = fast response mode (10msec) for appropriate devices wired to zone 9
0 = normal response, 350msec

***15** **KEYSWITCH ASSIGNMENT** [0] [ ]

1-8 = partition in which the zone 7 keyswitch is being used
0 = zone 7 keyswitch not used
Requires the use of zone 7 wired loop (zone 7 no longer available as protection zone when used for keyswitch operation). If the keyswitch is used, the fire and panic alarm voltage triggers automatically become ARMING and READY status outputs for support of the Keyswitch LEDs.

NOTE: Zone type 10 is automatically assigned to zone 7 if a keyswitch is used. Reports openings/closing by user "0" if reporting is enabled in field *40.

***16** **CONFIRMATION OF ARMING DING** (partition-specific) [0] [ ]

1= 1/2 second external alarm sounding ("ding") at the end of exit delay (or after kissoff from the central station, if sending closing reports.)
0 = no arming ding

***17** **AC MAINS LOSS KEYPAD SOUNDING** [0] [ ]

1 = enable sounding at the keypad (rapid beeping) when AC power is lost (sounding occurs about 2 minutes after actual AC loss)
0 = no AC power loss keypad sounding

***18** **MAINS PRESENCE DISPLAY** [0] [ ]

1 = Yes, display AC presence (AC) in lower right corner of keypad display
0 = No

*19 RANDOMISE AC MAINS LOSS REPORT [0] ☐

1 = randomise AC loss reporting between 30-60 minutes after an actual AC loss

0 = normal AC loss reporting (about 2 minutes after actual AC loss)

Selecting this option helps prevent an overload of AC loss messages at the central station during a community blackout.

*20 TELEPHONE MODULE PHONE CODE [00] [11] ☐ ☐

01-09 = first digit

11 (for ✳) or **12** (for #) = second digit

To disable the voice module, enter 00 for the 1st digit and enter 11 for the 2nd digit of the code (disable code = 00,11).

This is the 2-digit phone code used to access the system via the 4285 telephone module.

*21 PREVENT FIRE TIME-OUT [0] ☐

1 = disable (no timeout) the alarm sounder duration for any zone designated as a fire zone, regardless of partition, so that fire sounding continues until the system is reset

0 = the normal burglary alarm sounder duration (programmed in partition-specific field *13) should apply to fire alarms.

*22 KEYPAD PANIC ENABLE (partition-specific) [001] ☐☐☐

995 996 999

1 = enable the appropriate keypad panics used in this partition

0 = disable keypad panic**s**

*23 MULTIPLE ALARMS (partition-specific) [0] ☐

1 = enable multiple alarms

0 = disable multiple alarms

Determines whether or not more than one alarm can be sounded in a given zone during an armed period. Note that multiple alarm soundings will not occur more frequently than allowed by the programmed alarm sounder duration. This selection applies to local sounding and has no impact on the number of communication messages transmitted. Refer to Intermittent Sensor Suppression for limiting communication messages.

*24 IGNORE EXPANSION ZONE TAMPER [0] ☐

1 = disable (ignore) tamper

0 = tamper detection is desired (ANPI requirement)

Only applicable to certain polling loop sensors with tamper switches or 5800 series transmitters. This option is used to disable tamper detection on these devices.

*25 BURGLARY TRIGGER FOR RESPONSE TYPE 8 [1] ☐

1 = allow optional triggering of the voltage output on pin 7 of the J7 header to include zone response type 8 (24hr. auxiliary).

0 = only burglary and audible panic alarms (zone type 7) will trigger pin 7.

*26 INTELLIGENT TEST REPORTING [0] ☐

1 = no test report sent if any other type of report was sent since the last test report

0 = test reports are to be sent at the set intervals, regardless of whether or not other reports have been sent

*27 TEST REPORT INTERVAL [000] ☐☐☐

001-999 = test reporting interval in hours

000 = no test reporting is desired.

If a test report is desired, enter a test code in fields *81 & *82, location 7. Set first test report time in field *83.

*28 POWER UP IN PREVIOUS STATE [1] ☐

1 = upon power-up, after a prolonged power loss which caused the system's battery to discharge, the system will assume the system status prior to the power loss.

0 = the system will always power up in a disarmed state.

When the system powers up armed, an alarm will occur 3 minutes after arming if a zone is faulted. When so armed, reports closing as User #0 if open/close reporting for installer was enabled in field *39. Note that if the previous state was armed AWAY or STAY, the system may not respond to sensor changes for a small period of time (1-3 min.), which allows sensors such as PIRs to stabilise.

Note that authority levels 0 or 5 cannot be used to disarm the system if control powers up armed.

*29 QUICK ARM (partition-specific) [1] ☐

1 = enable arming of the burglary system in AWAY, STAY, INSTANT or MAXIMUM modes by using the # key instead of the security code. When armed, reports closing as User 0 if open/close reporting for User #2 (typically a master level user) was enabled for a given partition.

0 = Quick Arm is not desired. (The security code must always be used to disarm the system.)

Note that if quick arm is used, the installer code and authority level 5 code cannot disarm the system.

*30 MULTIFREQUENCY OR PULSE DIAL [0] ☐

1 = DTMF multifrequency service is being used

0 = pulse dial (decadic) phone service is used

If selecting multifrequency, make sure the subscriber has requested and is paying for multifrequency service. Note that whether or not multifrequency dialing for call placement is permitted, communication by the use of DTMF signaling (Ademco Expanded High Speed, Ademco 4+2 Express, Ademco Contact ID) will still take place. See field 1*33 for multifrequency w/pulse dial backup.

---

*31 PABX ACCESS CODE ☐☐☐

Enter up to four 2-digit numbers **00-09; B-F** (11-15).

If not required, enter nothing and proceed to next address; otherwise, enter prefix needed to obtain an outside Telecom line.

*32 PRIMARY SUBSCRIBER ACCT # ☐☐☐☐

(partition-specific) Enter 00-09; B-F (11-15) [15 15 15 15]

Enter a 3 or 4 digit (depending on report format) primary subscriber account number **00-09; B-F** (11-15).

Each number requires a 2-digit entry so as to allow entry of hexadecimal digits (B-F). If a 3 digit account number is to be used, only enter data in the first 3 locations, leaving the last one unfilled, by entering a *.

*33 PRIMARY PHONE NUMBER ☐☐☐☐☐☐☐☐☐☐☐☐☐☐☐☐☐

Enter the primary central station phone number, up to 17 digits, **0-9; enter #11 for *, #12 for #, and #13 for a 2 sec. pause.**

This is the phone number the control will use to transmit alarm and status messages to the central station. Do not fill unused spaces. Note that back-up reporting is automatic only if a secondary phone number is entered (8 calls are made to the secondary phone number if no acknowledgment is received after 8 attempts to the primary number).

*34 SECONDARY PHONE NUMBER

Enter the secondary phone number, up to 17 digits, **0-9; enter #11 for *, #12 for #, and #13 for a 2 sec. pause.**
It is used if communication on the primary number is unsuccessful, or if split/dual reporting is desired. Do not fill unused spaces. If this field is programmed, a secondary subscriber account number (field *90) *must* also be programmed (can be the same as the primary account number).

*35 DOWNLOAD PHONE NO.

Enter the downloading phone number, up to 17 digits, **0-9**; **enter #11 for *, #12 for #, and #13 for a 2 sec. pause.** Do not fill unused spaces.
This field is applicable only if downloading will be utilized.

*36 DOWNLOAD ID NO

Enter eight digits, **00-09; A-F** (10-15).
Only applicable if downloading will be utilized. Make entries as 2-digit numbers as follows:

00=0	02=2	04=4	06=6	08=8	10=A	12=C	14=E
01=1	03=3	05=5	07=7	09=9	11=B	13=D	15=F

*37 DOWNLOAD COMMAND ENABLES

Dialler Shutdwn	System Shutdwn	Restrict Access†	Remote Bypass	Remote Disarm	Remote Arm	Upload Programme	Download Programme

1 = enable a function
0 = disable a function

† **Restrict Download Access When Armed:** Can only arm unarmed partitions, upload the programme/event log, command relays, and request status

Each of the various remote functions can either be enabled or disabled through V-Link downloading software. Disabling a function means that you will not be able to perform that function with respect to this system. See field 1*53 to disable the download callback option.

*38 PREVENT ZONE XXX BYPASS (partition-specific) [000]

001-128 = zone number that cannot be bypassed by the user
000 = all zones can be bypassed
This selection does not affect fire zones, which the system prevents from being bypassed.

*39 OPEN/CLOSE REPORT FOR INSTALLER CODE

(partition-specific) [1]

1 = open/close reporting for the installer is desired
0 = no open/close reporting for the installer

*40 OPEN/CLOSE REPORTING FOR KEYSWITCH [0]

1 = enable open/close reporting for the keyswitch
0 = keyswitch open/close reporting is not desired

*41 NORMALLY CLOSED OR EOLR (ZONES 2-8) [0]

1 = end-of-line resistors are not used, in which case only **normally closed** devices must be used.
0 = end-of-line resistors used

*42 SUPPRESS FIRE ALARM RELAY [0]

1 = suppress fire alarm relay activation on 4204/Powerline Carrier Device relays
0 = 4204/Powerline Carrier Device fire alarm relay activities on fire alarms

***43 SUPPRESS WIRELESS SIREN ACTIVATION FOR FIRE ALARMS** [0] ☐

1 = suppress wireless siren activation on fire alarms (sounds for burg. Alarms)

0 = wireless siren sounds for fire alarms (and burglary alarms)

***44 RING DETECTION COUNT** [0] ☐

01-14 = ring counts of 1-14

00 = disable ring detection

15 = select answering machine defeat mode, which allows the system to receive calls even when a telephone answering machine is connected to the same phone line. In the answering machine mode, the caller should let the phone ring once, then hang up, and call again within 30 seconds. The system, upon hearing one ring followed by nothing, will not answer the first call, but will ready itself to pick up on the first ring of the next incoming call that is received within 30 seconds (the downloader calling again).

Only applicable if using a 4285 telephone module and/or if remote initiated downloading will be used.

***45 PRIMARY FORMAT** [0] ☐

0 = Low Speed **2** = Ademco Expanded High Speed

1 = Contact ID **3** = Ademco Express

Selects the reporting format for use on the primary telephone number.

***46 LOW SPEED FORMAT (PRIMARY)** [0] ☐

0 = Ademco Low Speed

1 = Sescoa/Radionics

***47 SECONDARY FORMAT** [0] ☐

0 = Low Speed **2** = Ademco Expanded High Speed

1 = Contact ID **3** = Ademco Express

Selects the reporting format for the secondary telephone number.

***48 LOW SPEED FORMAT (SECONDARY)** [0] ☐

0 = Ademco Low Speed

1 = Sescoa/Radionics

***49 CHECKSUM VERIFICATION** [0] ☐

1 = either or both primary/secondary formats send a verification digit to validate the message at the receiver without having to send two message rounds. Selection is valid for 3+1, 4+1, and 4+2 reports.

0 = no checksum verification

***50 SESCOA/RADIONICS SELECT** [0] ☐

0 = Radionics format with hexadecimal 0-9, B-F reporting

1 = SESCOA format with only numeric reporting (0-9).

Selection applies to both primary and secondary phone numbers.

***51 DUAL REPORTING** [0] ☐

1 = all reports sent to both primary and secondary phone numbers. If used with Split Reporting option **1** (1*34), alarms go to both primary & secondary numbers, while all other reports go to secondary only. If used with Split Reporting option **2**, alarms go to both lines, open/close and test messages go to secondary only, while all other reports go to primary.

0 = no dual reporting

***52 STANDARD/EXPANDED REPORT PRIMARY** [0] ☐

0 = standard reporting for the primary phone number

1 = expanded reporting for the primary phone number

Note: Expanded overrides 4+2 format.

***53 STANDARD/EXPANDED REPORT SECONDARY** [0] ☐

0 = standard reporting for the secondary phone number

1 = expanded reporting for the secondary phone number

Note: Expanded overrides 4+2 format.

***54 MAXIMUM No. OF DIALLER ATTEMPTS** [8] ☐

1-8 = number of dialler attempts

***55 TELEPHONE SYSTEM SELECTION** [00] ☐

00=Latin America, Spain, Italy, Eastern Europe, China
01= Australia †
02= Belgium†
03= Denmark†
04= Finland †
05= France †
06= Netherlands †
07= Norway †
08= Sweden
† options 01-07 require special hardware configuration

***56 CONTACT ID DATA ON KEYPAD BUS FOR ALTERNATIVE COMMUNICATIONS MEDIA REPORTING INSTEAD OF DIGICOM** [0] ☐

1= Yes
0= No

***57 CONTACT ID DATA ON KEYPAD BUS FOR BACK-UP ALTERNATIVE COMMUNICATIONS MEDIA REPORTING IF DIGICOM FAILS** [0] ☐

1= Yes
0= No

***58 SELECTION OF CONTACT ID MESSAGE DATA ON KEYPAD BUS FOR SUBSCRIBER ID#1** [0][0][0][0][0][0]

Alarms	Troubles	Bypasses	Open/ Close	System Conditions	Test Reports

1=Yes
0=No

***59 SELECTION OF CONTACT ID MESSAGE DATA ON KEYPAD BUS FOR SUBSCRIBER ID#2** [0][0][0][0][0][0]

Alarms	Troubles	Bypasses	Open/ Close	System Conditions	Test Reports

1=Yes
0=No

***60 VERIFIED ALARM REPORT ENABLE** [0] ☐

1= Yes, a special Contact ID report if 2 burglary alarms are detected within 45 minutes (Swedish requirement)
0= No

***61 ROBOFON VERSION OF CONTACT ID** [0] ☐

1= Yes (Swedish requirement)
0= No

***79 ZONE TYPE RESTORES FOR ZONE TYPES 1-8**

☐ ☐ ☐ ☐ ☐ ☐ ☐ ☐
1 2 3 4 5 6 7 8

1 = enable restore reporting for individual zone types
0 = no restore report for a zone type

***80 ZONE TYPE RESTORES FOR ZONE TYPES 9/10** ☐ ☐ 9 10

1 = enable restore reporting for individual zone types
0 = no restore report is desired for a zone type

***83** **FIRST TEST REPORT TIME** [ ] [ ] [ ]

00-07 = day that the first test report shall be transmitted

00-23 hours/00-59 min. = time that the first test report shall be transmitted

00 = immediately upon exiting programme mode

00 entry in the day location will cause the report to be sent at the next occurrence of the time that is set.

Day 01=Monday. See fields *81 & *82 for assigning the Test Report code.

***84** **INTERMITTENT SENSOR SUPPRESSION** (partition-specific) [03] [ ]

01-15 = number of messages (alarms or troubles) sent for a specific channel in an armed period (Intermittent Sensor Suppression)

00 = all alarm or trouble codes are reported.

***85** **ENABLE DIALLER REPORTS FOR PANICS & DURESS** (partition-specific) [0] [ ] [ ] [ ] [ ]

995 996 999 Duress

1 = enable panic/duress reporting for each location

0 = disable panic/duress reporting

***86** **REPORT/LOG ZONE TYPE 23** [0] [ ]

1 = faults of zone type 23 zones communicated in Contact ID format and logged in the event log.

0 = zone type 23 zone faults are not to be communicated or event logged

***87** **ENTRY WARNING** (partition-specific) [1] [ ]

1 = slow beeps that continue for the entire entry delay period

0 = 3 short beeps

***88** **BURG. ALARM COMM. DELAY** (partition-specific) [0] [ ]

1 = 16-second delay (no delay on 24-hour reports)

0 = no delay on burglary alarm communication

***89** **RESTORE REPORT TIMING** [0] [ ]

0 = instant restore report as zone restores

1 = reporting after siren timeout if zone restored

2 = restore report when system is subsequently disarmed

***90** **SECONDARY SUBSCRIBER ACCT #** [ ] [ ] [ ] [ ]

(partition-specific) [15 15 15 15]

00-09; B-F (11-15) = enter the 3 or 4 digit number (depending on report format) for the secondary subscriber account, . Each number requires a 2-digit entry so as to allow entry of hexadecimal digits (B-F). If a 3-digit number is to be used, only enter data in the first 6 locations, leaving the last two unfilled. Default=15 15 15 15. Erase the field by entering *90*.

NOTE: This field *must* be programmed if a secondary phone number is used (field *34). This account number can be the same as the primary account number.

1*00 **CONTACT ID REPORTING IN ASCII THROUGH PRINTER PORT** [0] [ ]

1= Yes

0= No, event log usage

1*01 **ASCII CONTACT ID REPORTING WITH OR WITHOUT ACK** [0] [ ]

1= ACK not required

0= ACK required

1*02 **ASCII CONTACT ID BAUD RATE** [0] [ ]

0= 1200

1= 2400

2= 4800

1*05 BYPASS ENABLE FOR FIRE ZONES [0] ☐

1= Yes, allow bypass of fire zones
2= No, fire zones cannot be bypassed

1*06 SUPPRESS ALL KEYPAD DISPLAYS WHEN SYSTEM IS ARMED [0] ☐

1= Yes
0= No

1*07 DISPLAY TRBL INSTEAD OF CHECK [1] ☐

1 = display the letters TRBL instead of CHECK when a zone or system trouble occurs.
0 = display the letters CHECK when a zone or system trouble occurs.

1*08 SUPPRESS USE OF "ARMED" LED ON KEYPADS [0] ☐

(For countries where Red is only for alarm)

1= Yes
0= No

1*09 SUPPRESS KEYPAD ARMING STATUS INDICATIONS WHEN SYSTEM IS ARMED [0] ☐

1= Yes
0= No

1*10 ALARM DISPLAY LOCK [0] ☐

1 = the keypad display for alarms will always display the first zone to go into alarm. Subsequent alarm zones shall only be displayed if the READY key is pressed.
0 = zones in alarm scroll continuously in numerical order

1*11 COMMON AREA 1 PARTITION [0] ☐

1-8 = common area 1 partition
0 = none

1*12 AFFECTS COMMON AREA 1 (partition-specific) [0] ☐

1 = this partition affects common area 1. This partition will cause common area 1 to disarm when this partition disarms.
0 = this partition does not affect common area 1

1*13 ARMS COMMON AREA 1 (partition-specific) [0] ☐

1 = arming this partition causes the system to attempt to arm the common area 1 partition automatically. Can only arm common area 1 if all other affecting partitions are armed. To enable this function, field 1*12 (partition-specific) must also be enabled.
0 = does not apply

1*14 COMMON AREA 2 PARTITION [0] ☐

1-8 = common area 2 partition
0 = none

1*15 AFFECTS COMMON AREA 2 (partition-specific) [0] ☐

1 = this partition affects common area 2. This partition will cause common area 2 to disarm when this partition disarms.
0 = this partition does not affect common area 2

1*16 ARMS COMMON AREA 1 (partition-specific) [0] ☐

1 = arming this partition causes the system to attempt to arm the common area 2 partition automatically. Can only arm common area 2 if all other affecting partitions are armed. To enable this function, field 1*12 (partition-specific) must also be enabled.
0 = does not apply

1*17 **COMMON AREA 3 PARTITION** [0] ☐

1-8 = common area 3 partition
0 = none

1*18 **AFFECTS COMMON AREA 3** (partition-specific) [0] ☐

1 = this partition affects common area 3. This partition will cause common area 3 to disarm when this partition disarms.
0 = this partition does not affect common area 3

1*19 **ARMS COMMON AREA 3** (partition-specific) [0] ☐

1 = arming this partition causes the system to attempt to arm the common area 3 partition automatically. Can only arm common area 3 if all other affecting partitions are armed. To enable this function, field 1*12 (partition-specific) must also be enabled.
0 = does not apply

1*20 **AUTO BYPASS FAULTED EXIT ROUTE ZONES** [0] ☐

1 = enable automatic bypass of exit route zones remaining faulted at the end of the exit delay. Must be selected only if field *07 is enabled.
0 = automatic bypass function is not desired

1*21 **EXIT DELAY RESET** [0] ☐

1 = reset Exit Delay to 60 seconds after door is closed
0 = Exit Delay not to be reset

1*22 **CROSS ZONING PAIR ONE** ☐☐ ☐☐

001-128 = first pair of zones which must both be faulted within a five minute period to cause an alarm
000, 000 = disable

1*23 **CROSS ZONING PAIR TWO** ☐☐ ☐☐

001-128 = second pair of zones which must both be faulted within a five minute period to cause an alarm
000, 000 = disable

1*24 **CROSS ZONING PAIR THREE** ☐☐ ☐☐

001-128 = third pair of zones which must both be faulted within a five minute period to cause an alarm
000, 000 = disable

1*25 **CROSS ZONING PAIR FOUR** ☐☐ ☐☐

001-128 = fourth pair of zones which must both be faulted within a five minute period to cause an alarm
000, 000 = disable

1*26 **PANIC BUTTON OR SPEED KEY** ☐ ☐ ☐ ☐
(partition-specific) A B C D

01-32 = the number of the multi-keystroke macro associated with each of the lettered keys on the keypad
00 = each of the lettered keys (with exception of the D key, where 00 signifies "not used") which shall remain single press panic keys.

1*27 **FIELD 1*31 RF TRANSMITTER CHECK-IN SUPERVISION INTERVAL TO BE MULTIPLE OF 1 HOUR INSTEAD OF 2 HOURS** [0] ☐

1 = 1 hour (must be 1 hour for CENELEC compliance)
0 = 2 hours

1*28 **RF TX LOW BATTERY SOUND** [0] ☐

0 = audible beep and display annunciation upon RF transmitter low battery condition is desired only in disarmed state.
1 = audible beep and display is desired in both armed and disarmed states.

1*29 **RF TX LOW BATTERY REPORT ENABLE** [0] ☐

1 = a trouble message for RF transmitter low battery conditions sent to the central station.

0 = no report for transmitter low battery is desired. Note that a trouble message will be sent for a transmitter supervision failure independent of this selection.

1*30 **RF RCVR SUPERVISION CHECK-IN INTERVAL** [06] ☐

02-15 times 2 hours = the check-in monitoring interval in 2-hour increments (4-30 hours).

00 = disable receiver supervision

If selected, failure of a receiver to receive any RF signal within the time entered will result in activation of the response type programmed for zone 990 for the first receiver and zone 988 for the second receiver and their related communication reports.

1*31 **RF TRANSMITTER CHECK-IN INTERVAL** [12] ☐

02-15 times 2 hours = the check-in monitoring interval in 2-hour increments (4-30 hours)

00 = disables transmitter supervision

If selected, failure of an individual transmitter to send a supervision signal within the time entered will result in a trouble response and related communication report.

1*32 **RECEIVER TYPE** [0] ☐

0 = none

1 = using 4281 series receivers

2 = using 5881 series receivers

1*33 **MULTIFREQUENCY DIALLING W/ PULSE DIAL BACKUP** [0] ☐

1 = enable pulse dial back-up dialling if communicator is not successful in dialling using multifrequency DTMF on first attempt.

0 = this option is not desired

1*34 **COMM. SPLIT REPORT SELECTION** [0] ☐

0 = split reporting disabled

1 = alarm, alarm restore & cancel reports sent to primary Telecom number, all others to secondary Telecom number

2 = open/close & test reports sent to secondary Telecom number and all other reports to primary.

This field allows certain reports to be directed to either the primary or secondary phone number. See *51 for split/dual reporting comments.

1*35 **LOW BATTERY TEST INTERVAL** [0] ☐

1 = 1.5 second test every 50 seconds (Norwegian requirement)

0 = 13 second test every 4 minutes (ANPI requirement)

1*36 **CPU FAIL TRIGGER OUTPUT** [0] ☐

1 = yes, Output trigger 2 on J7 to be CPU fail output, overriding any other selection for Output 2 (CENELEC requirement)

0 = no, normal use for Output 2

1*37 **TLM INPUT ON ZONE 9** [0] ☐

1 = yes, telephone line fault monitor output to be fed into zone 9

0 = no, normal use for zone 9

1*38 **USER RESET OF TAMPER ALARMS INSTEAD OF INSTALLER ONLY RESET** [0] ☐

1 = yes

0 = no (ANPI requirement)

1*39 USER BYPASS OF TAMPER FAULTS INSTEAD OF INSTALLER ONLY BYPASS [0] ☐

1 = yes
0 = no (ANPI requirement)

1*40 MAX. NUMBER OF ZONES THAT CAN BYPASSED PER PARTITION (partition-specific) [00] ☐☐

01-15, 00 = no restriction (must **not** be 00 for ANPI compliance)

1*41 BYPASS/UNBYPASS ZONES WHEN ARMED [0] ☐

1 = able to bypass and unbypass non-fire zones while the system is armed.
0 = zone bypass during the armed mode is not desired.

1*42 CALL WAITING DEFEAT [0] ☐

1 = the panel defeats call waiting on the first attempt (DO NOT enable unless call waiting is being used.
0 = no call waiting defeat

1*43 PERMANENT KEYPAD DISPLAY BACKLIGHTING [0] ☐
(partition-specific)

1 = backlighting for the keypad display remains on at all times.
0 = display remains unlit unless a key is pressed. The backlighting then turns off again after a period of keypad inactivity. Note that when a key is pressed, display backlighting turns on for **all** keypads in that partition.

1*44 WIRELESS KEYPAD TAMPER DETECT [0] ☐

1 = enable tamper detection on wireless keypad (ANPI requirement)
0 = tamper detection is not desired.
If this feature is enabled, any attempt to tamper by means of many trial entries at a wireless keypad will be blocked by the control panel. If more than 40 key depressions are received without a valid sequence (arm, disarm, etc.), the Control panel will disable the wireless keypad. The inhibit is removed once a valid key sequence is received from a wired keypad.

1*45 EXIT DELAY SOUNDING (partition-specific) [0] ☐

1 = beeps from the keypads during exit delay occur
0 = no keypad sound during exit delay

1*46 AUXILIARY OUTPUT MODE [0] ☐

0 = ground start output is required
1 = the auxiliary output is used to produce an open/close trigger (produced only if all partitions are armed);
2 = the auxiliary output will be used to produce keypad-like sounding at an auxiliary sounder (ex. PAL328N) This option applies only to the partition set in field *15.
3 = AAV module is being used

NOTE: Only one of the above options can be active within a system.

1*47 CHIME ON EXTERNAL SIREN (partition-specific) [0] ☐

1 = chime annunciation using the external alarm sounder.
0 = not desired

1*48 WIRELESS 5827/5827BD KEYPAD ASSIGNMENT [0] ☐

1-8 = the partition in which 5827/5827BD RF keypad is used
0 = no RF keypad is used

1*49 SUPPRESS TX SUPERVISION SOUND [0] ☐

1 = disable trouble sounding for transmitter check-in failure
0 = audible trouble sounding is desired

1*50 **No. of SECONDS ADDED PER DAY** [0] ☐

00-30 = the number of added seconds per day to correct the real-time clock

1*51 **No. OF SECONDS REMOVED PER DAY** [0] ☐

00-30 = the number of subtracted seconds per day to correct the real-time clock

1*52 **SEND CANCEL IF ALARM + OFF** (partition-specific) [0] ☐

1 = cancel reports to be sent when the system is disarmed after an alarm, regardless of how much time has gone by.

0 = cancel reports are to be sent within alarm sounder timeout period only.

1*53 **DISABLE DOWNLOAD CALLBACK** [0] ☐

1 = disable the callback requirement for downloading

0 = require a callback

1*54 **INTERNAL CLOCK SYNC** [0] ☐

1 = use internal crystal for real-time clock

0 = use AC sync for clock

1*55 **INTERNATIONAL DATE FORMAT** [1] ☐

1 = the event log date format shall be DDMMYY.

0 = the date format shall be MMDDYY.

1*56 **AC 60Hz or 50Hz** [1] ☐

1 = AC mains frequency is 50Hz; **0** = AC mains frequency is 60Hz.

This selection is used to synchronise the real-time clock and X-10 devices.

1*57 **ENABLE 5800 RF BUTTON GLOBAL ARM** [0] ☐

1 = have the system arm/disarm in accordance with the button's user's global arming settings.

0 = the button is not to be used to global arm the system (however, home partition arming will still occur).

1*58 **ENABLE 5800 RF BUTTON FORCE ARM** [0] ☐

1 = allow the RF Button user to force bypass all faulted zones. When attempting to arm the system, the keypad will beep once after pressing the button if any faulted zones are present. If this feature is enabled, the user should then press the button again within 4 seconds to force bypass those zones and arm the system.

0 = RF button forced bypassing is not desired.

1*59 **SUPRESS STATUS LED OUTPUT WHEN ZONE 7 KEYSWITCH ENABLED / RETAIN VOLTAGE TRIGG. OUTPUTS** [0] ☐

1 =yes; **0** = no

1*60 **ALARM VERIFICATION (audio)** [0] ☐

1 = 2-Way Audio (AAV) is being used. Zone 5 is then not available as a protection zone and is used only to provide feedback from the AAV that its function has ended. Control will send Contact ID Event Code 606 to signal the central station equipment to ready itself for an audio verification session.

0 = alarm verification is not being used.

1*61 **DISPLAY "TAMP[e]R"** [0] ☐

1 = yes, display "TAMPR" upon tamper condition

0 = no, display "CHECK" or "TRBL" depending on the state of field 1*07

1*62 **TAMPER DETECT IN TEST MODE** [0] ☐

1 = yes, terminate Test mode upon detection of tamper condition

0 = no, remain in Test mode upon tamper condition, display "FAULT"

1*66 **SILENCE SOUNDER DURING AAV** [0] ☐

1 = audio alarm verification (AAV) being used so that alarm sounders and keypad sounders can be silenced when listening microphones are on.

0 = AAV is not being used.

1*67 **VIDEO ALARM VERIFICATION** [0] ☐

1 = Video Alarm Verification (VAV) is being used. This selection enables transmission of Contact ID Event Code 609 to signal the central station equipment to ready itself for video image reception and processing.
0 = otherwise

1*70 **EVENT LOG TYPES** ☐ ☐ ☐ ☐ ☐

Alm Chck Byps O/C Systm

1 = enable each type of event for which event logging is desired.
0 = disable event logging for specific type

1*71 **12/24 HOUR TIME STAMP FORMAT** [0] ☐

1 = 24 hour format.
0 = standard 12 hour;

1*72 **EVENT LOG PRINTER ON-LINE** [0] ☐

1 = have the printer print events as they occur
0 = enable the printer such that the logs are only printed upon request.

1*73 **PRINTER BAUD RATE** [0] ☐

1 = printer is set for 300 baud.
0 = printer is set for 1200 baud (preferred).

1*74 **RELAY TIMEOUT XXX MINUTES** [000] ☐☐☐

000-127 = enter the relay timeout minutes, in multiples of 2 minutes, desired for #80 Menu Mode time driven event relay command numbers "04/09" and #93 Menu Mode Relay Programming output command "56" (refer to #93 and #80 Menu Mode sections in this manual).

1*75 **RELAY TIMEOUT YYY SECONDS** [000] ☐☐☐

000-127 = enter the relay timeout seconds desired for #80 Menu Mode time driven event relay command numbers "05/10" and #93 Menu Mode Relay Programming command "57" (refer to #93 and #80 Menu Mode sections in this manual.

1*76 **ACCESS CONTROL RELAY** (partition-specific) [00] ☐☐

01-96 = enter the relay number for the relay that will be used for access control.
00 = not used in this partition.

The system can be programmed to provide user activated access control. If enabled, the assigned relay will pulse for 2 seconds when the user enters his code and presses "0".

1*77 **LOG FIRST MAINTENANCE SIGNAL** [0] ☐

1 = log first maintenance signal from each smoke detector
2 = no logging

2*00 **NUMBER OF PARTITIONS** [1] ☐

1-8 = the number of partitions to be used in the system.

SUMMER TIME NOTE: Summer Time starts and ends at 2AM on the designated month and weekend.

2*01 **SUMMER TIME START/END MONTH** [04,10] ☐☐ ☐☐

00-12 = the months in which Summer time starts and ends.
00, 00 = Summer time does not apply to the user's region.
Standard setting for North America is 04,10.

2*02 **SUMMER TIME START/END WEEKEND** [1,5] ☐ ☐

1 = first **3** = third **5** = last **7** = third from last
2 = second **4** = fourth **6** = next to last
Standard setting for North America is 1,5.

Enter the start and end weekends for Summer time.

2*05 **AUTO-ARM DELAY** (partition-specific) [15] [|]

01-14 = (times 4 minutes) the time between the end of the arming window and the start of auto arm warning time
00 = no delay is desired.
15 = auto arming is not desired.

2*06 **AUTO-ARM WARNING PERIOD** (partition-specific) [15] [|]

01-15 = the time in one minute increments during which the user is warned by a keypad sounding and display to exit the premises prior to auto arming of the system.

2*07 **AUTO-DISARM DELAY** (partition-specific) [15] [|]

01-14 = (times 4 minutes) the time between the end of the disarming window and the start of auto disarming of the system.
00 = no delay is desired.
15 = auto disarming is not desired.

2*08 **ENABLE FORCE ARM FOR AUTO-ARM** (partition-specific) [0] [ ]

1 = the system should automatically bypass any faulted zones when it attempts to auto arm.
0 = otherwise

2*09 **OPEN/CLOSE REPORTS BY EXCEPTION** (partition-specific) [0] [ ]

1 = open/close reports sent **only if** the openings/closings occur **outside** the arm and disarm windows. Open reports will also be suppressed during the closing window in order to prevent false alarms if the user arms the system, then reenters the premises to retrieve a forgotten item. Note that openings/closings are still recorded in the event log.
0 = exception reporting is not desired.

Note: This field **must** be set to 1 if "No Opening" and "No Closing" reports are to be sent (2*13, 2*14).

2*10 **ALLOW DISARMING ONLY DURING ARM/DISARM WINDOWS** (partition-specific) [0] [ ]

1 = disarming of the system should be allowed only during the arming/disarming windows or if the system is in alarm (if 2*11 is set to "1"). Note that this applies **only** to operator level users. Installer, Master and manager level users can disarm the system at any time.
0 = disarming can occur at any time.

2*11 **ALLOW DISARM OUTSIDE WINDOW IF ALARM OCCURS** [1] [ ]

1 = allow the system to be disarmed outside the programmed disarm (opening) window if an alarm has occurred.
0 = allow disarming only during the disarm window, regardless of system status.

Used only if field 2*10 (partition-specific field) is set to 1. If field 2*10 is set to 0 for a partition, this field (2*11) has no effect for that partition.

2*18 **ENABLE GOTO FOR THIS PARTITION** [0] [ ]

(partition-specific)
1 = this partition is to be accessed from another partition's keypad using the GOTO command.
0 = otherwise

2*19 **USE PARTITION DESCRIPTORS** [1]

1 = partition descriptors will be programmed. If enabled, the normal keypad display will include a partition number and four-character descriptor).

0 = cause the keypads to display a non-partitioned system type of display (no partition number will appear).

2*20 **ENABLE J7 TRIGGERS BY PARTITION** [1]

(partition-specific)

1 = enable for displayed partition

0 = disable for displayed partition

2*21 **SUPERVISION PULSES FOR TRIGGER OUTPUTS** [000] F B S

1 = enable pulses for each type of trigger (burglary, fire, silent panic). This option causes the control to send periodic short pulses on the J7 radio triggers These pulses are used by the transmitter to determine that its connection to the control is still intact.

0 = not desired

Used for supervised connection to applicable Long Range Radio transmitters.

2*22 **DISPLAY FIRE ALARMS OF OTHER PARTITIONS** [1]

(partition-specific)

1 = allow fire alarms that occur on other partitions to be displayed at this partition's keypads.

0 = otherwise

2*23 **DISPLAY BURGLARY & PANIC ALARMS OF OTHER PARTITIONS** (partition-specific) [1]

1 = allow burglary and panic alarms that occur on other partitions to be displayed at this partition's keypads.

0 = otherwise

2*24 **DISPLAY TROUBLES OF OTHER PARTITIONS** [1]

(partition-specific)

1 = allow troubles that occur on other partitions to be displayed at this partition's keypads.

0 = otherwise

SECTION 21

#93 Menu Mode Programming

This section provides the following information:

- #93 Menu Mode main menu options
- Zone Programming
- Serial Number Programming
- Report Code Programming
- Alpha Programming
- Device Programming
- Relay Programming
- Relay Voice Descriptors
- Custom Index Programming (Telephone Module substitute words)

#93 Main Menu Options

The following fields should be programmed before beginning: 2*00: Number of Partitions; 1*32: RF receiver type.

After programming all system related programming fields in the usual way, press #93 while still in programming mode to display the first choice of the menu driven programming options, which are as follows:

ZONE PROG? 0=No 1=Yes	For programming the following: • Zone Number • Zone Response Type • Partition Number for Zone • Dialler report code for zone • Input Device Type for zone (whether RF, polling loop, etc.)
SEQUENTIAL LEARN? 0=no 1=yes	For programming the following: • Input Device Type for zone (whether RF, polling loop, etc.) • Enrolling serial numbers of 5800 series transmitters & serial polling loop devices into the system (all other zone characteristics must be pre-programmed).
REPORT CODE PROG? 0=no 1=yes	For programming the following: • Alarm report codes for zones • Restore & supervisory codes • All other system report codes
ALPHA PROG? 0=no 1=yes	For entering alpha descriptors for the following: • Zone Descriptors • Installer's Message • Custom Words • Partition Descriptors • Relay Descriptors

DEVICE PROG? 0=no 1=yes	For defining the following device characteristics for addressable devices, including keypads, RF receivers (4281/5881/5882EU), 4204 output relay modules, and 4285 VIP Module and VGM • Device Address • Device Type • Keypad Options (incl. partition assignment) • RF House ID
RELAY PROG? 0=no 1=yes	For defining output relay functions.
RLY VOICE DESCR? 0=no 1=yes	For entering voice descriptors for relays/Power Line Carrier devices to be used with the 4285 VIP Module
CUSTOM INDEX ? 0=no 1=yes	For creating custom word substitutes for Telephone Module annunciation.
CLEAR RF SERIAL#? 0=no 1=yes	For deleting all RF serial numbers presently enrolled in the system.

Press 0 (NO) or 1 (YES) in response to the displayed menu selection. Pressing 0 will display the next choice in sequence.

The following is a list of commands used while in the menu mode.

#93 Menu Mode Key Commands

#93	Enters Menu mode
[✳]	Serves as ENTER key. Press to have keypad accept entry.
[#]	Backs up to previous screen.
0	Press to answer NO
1	Press to answer YES
00	Escapes from menu mode, back into data field programming mode, if entered at the first prompt of each main menu option.

Zone Programming (this section has been revised from previous manuals)

Enter Programming mode [Installer Code] + **8 0 0 0**. The following fields should be programmed before beginning:
2*00: Number of Partitions; 1*32: RF Receiver Type.
Also, before programming wireless zones, the RF receiver must be enabled in Device Programming Mode (procedure described later in Device Programming section).

Then press #93 to display "ZONE PROG?".

```
ZONE PROG?
1=Yes  0=No
```

Press 1 to enter ZONE PROGRAMMING mode. The following screens will appear. Press [✳] to display the next screen. Press # to display a previous screen.

If the system has been set up to use 5800 series RF, and a programme tool has not been programmed, the following "PROGRAM TOOL" prompt will be displayed. If the system has not been set up to use 5800 series RF or a programme tool has already been programmed, the system will advance to the "ENTER ZN NO." prompt.

```
PROGRAM TOOL?
0 = NO, 1 = YES    0
```

If a programme tool is being used, enter "1." If not using a tool, enter "0". When a "0" is entered, the system will advance to the "ENTER ZN NO." prompt.

```
010 INPUT S/N: L
      Axxx-xxxx
```

If "1" is entered, the system will prompt for the unit's serial number. Enter the programme tool's serial number using one of the following methods:

a) Enter the 7-digit serial number for the transmitter

or

b) Press any button on the transmitter. The keypad should beep three times and display the serial number of the tool.

```
010  PROG AS BR: 3
    A123-4567
```

In this example, the serial number is A123-4567. Once enrolled, the upper left-hand button of the programme tool can be pressed to ready the system for enrolling a device into the system.

The serial number for the programme tool will only remain in the system until the programming mode is exited. (Entering #97 will not delete the tool.)

Press [*] to continue or press the [#] key to back the system up to the "PROGRAM TOOL? " prompt.

```
ENTER ZN NO.
000 = QUIT          020
```

Zone Number Entered

Enter the zone number to be programmed (protection zones 001-128, relay zones 601-696,† ECP device supervisory zones 800-831, system supervision zones 988, 990,992 [duress], 997 or keypad panic zones 995, 996, 999). Press [✳] to accept entry.

† Programme relay zone numbers only if either of the following is true:
A: Supervision of a relay is desired (enter zone response type 5 or 19).
B: You are using **only** the relay output(s) of a 4208UXM or 4101 polling loop relay module without using a protection zone on the module. This allows enrollment of the serial number of the relay module, which is required for the control to identify and communicate with the respective relay output. (If using a protection zone on these modules, you need only enter the protection zone number for enrolling the serial number. See Relay Programming V-PLEX ZONE # prompt.)

```
020  ZT  P  RC  In:L
     00  1  00  RF:N
```

A summary screen for that zone will appear. ZT=Zone Type, P=Partition, RC=Report Code, In:=the input type of device, and L=the device's loop number to which the sensor is connected (some devices can support more than one zone by means of individual loops (ex. 5801, 5804, 5804EU, 5816, 5816EU, 5817, etc.)

020 Zone Response
Zone Disabled 00

Each zone in a system must be assigned a zone type, which defines the way in which the system responds to faults in that zone. Refer to *ZONE TYPE DEFINITIONS* section for detailed definitions of each zone type. Enter the zone response type for this zone. The screen will automatically display the zone type for the number entered. Press [✳] to accept entry.

† For 5800/5800EU series RF devices or serial number multiplex devices only.

Zone Types are as follows:

00 Assign for unused zones
01 Entry/Exit #1, burglary
02 Entry/exit #2,
03 Perimeter, burglary
04 Interior, follower, burglary
05 Trouble by day/Alarm by night, burglary
06 24 hour silent alarm
07 24 hour audible alarm
08 24 hour auxiliary
09 Fire
10 Interior, delay, burglary
19 24 hour Trouble
20 Arm-stay†
21 Arm-away†
22 Disarm†
23 No alarm response (ex. relay action)
27 Access Point
28 MLB Supervision (if VGM installed)

010 ACCESS POINT
(00-31) 01

If response type 27 was selected, this prompt will be displayed. Enter the access point to be controlled by the input type **(00-31)**.

010 ENTRY OR EXIT
0

Select whether the access point is an entry or exit point.
0 = entry
1 = exit

020 Partition

Enter the partition number (1-8) in which this zone is located.

020 Report Code

Enter the report code for this zone.

020 Input Type
RF Trans. RF:

Note that input types 4 & 5 are valid for certain 5800/5800EU series transmitters only (ex. 5801, 5802, 5802CP, 5804EU& 5804). When using 5700 series transmitters, always set the input type to 3 (RF). The zone number of the transmitter identifies whether or not supervision is required (ex. 5700 wireless zone number 63 is not supervised).

Enter the input device type as follows: 0 = not used; 1=wired; 3=supervised RF transmitter (RF type); 4=unsupervised RF transmitter (UR type); 5=RF button type transmitter (BR type); 6=serial number polling loop device (SL type); 7=DIP switch type polling loop device; 8=right loop of DIP switch type device; 9=keypad input (code + #73, code + #74); 10=PassPoint ACS input.

Right loops refer to the use of the right loop on a 4190WH zone expander module and/or 4278 series PIR, which allow hard-wired devices to be monitored by the polling loop.

If wired, DIP switch polling loop, or 5700 series devices are being programmed, after completing this entry, the summary display appears. Press [✳] to continue. The display will now return to the "Enter Zone Number" prompt for programming the next zone into the system. If all zones are programmed, enter **00** and press (✳) to exit back to normal programming mode.

If either 5800 series RF or polling loop serial number devices are being programmed, continue to the next prompt.

010 SMART CONTACT 1 = YES 0 = NO	If input type 6 was selected, this prompt will be displayed. Enter **1** for devices that monitor maintenance signals (ex. 5192SD, 5192SDT, 5808). Otherwise, enter **0**.
10 V-PLEX RELAY? 1 = YES 0 = NO	If input type 6 was selected, this prompt will be displayed. Enter 1 if using 4208UXM or 4101SN relay module for this zone. Otherwise, enter 0.
010 CONS ECP ADDR (01-31) 01	If input type 09 was selected, this prompt will be displayed. Enter the ecp address of the keypad that is being used for entry/exit for this access point (01-31).
010 ACS ZONE NO (00-31) 01	If input type 10 was selected, this prompt will be displayed. Enter the Passpoint ACS zone ID that this Vista zone maps to (00-31).
	Press [*] to continue.
010 LOOP # 1	The cursor should now be flashing on the loop number. The default is "1." To accept this, press [*]. If a different loop number is being used on this device, enter the loop number (1-4) and press [*] to continue. (Refer to the transmitter's instructions for loop numbers.) **The loop number must be entered here, whether using Zone Programming or Sequential Mode to enroll serial numbers.** If you want to delete the serial number, enter "0" and press [*]. The system will then prompt, "DELETE S/N?" Press the "1" (YES) key to complete the delete sequence. This process deletes the serial number only, ***not*** the loop number. The assumption is that the proper loop number was programmed, but the wrong serial number was enrolled.
010 LEARN S/N? 1 = YES, 0 = NO 1	If the device's serial number has not been previously "enrolled," you may enter the enrollment mode now by either entering "1" (YES) ***or*** by pressing the upper left-hand button of the programme tool. **If using the programme tool, move to the physical location of the device to be enrolled before pressing the button.** A single short beep will verify that the button has been pressed. The system will respond to the first serial number transmitted after the "1" key on the keypad or the button of the programme tool is pressed. Enter "0" (NO) to enroll later. (If "0" is entered, the system will advance to the summary screen prompt.)
010 INPUT S/N Axxx-xxxx	This prompt is displayed if "1" (YES) is entered in response to the "Learn S/N?" prompt. The serial number may be enrolled by one of two methods: a) Enter the 7-digit serial number printed on the device using an alpha keypad, OR b) Activate the device (e.g., press a button, open or close a door, etc.).
010 INPUT S/N A022-4064	The system will enroll the serial number of the first device heard.

If the serial and loop number combination is already present in the system, the keypad will sound a single long beep and display the word "DUPLICATE" along with the serial number, and the number of the zone containing the serial/loop number combination.

The system will then enter an optional confirmation mode so that the operation of the actual programmed input can be confirmed. Activate the loop input or button that corresponds to this zone. **We recommend that you confirm the programming of every device before proceeding to the next zone.**

```
010  CONFIRM  RF:1
  A022-4064       1
```

When the system sees activity on the appropriate input, it will beep three times and display the confirmation message.

At any time during this step, you may press the [*] key on the keypad or the upper left-hand button of the programme tool if you are satisfied with the serial and loop number combination that has been enrolled, regardless of whether or not the enrolled input has been "confirmed."
If the incorrect device has been enrolled, press the [#] key on the keypad or upper right-hand button on the programme tool to delete the serial number and return to the "LEARN S/N" prompt. A single long beep will be heard from the keypad to verify pressing of the upper right-hand button. Then, press "1" (Yes) or press the upper left-hand button of the programme tool (a single short beep will verify the system is ready for enrolling) and re-activate the proper device loop input.

```
010  ZT  P   RC  B  INL
  s  03  2   3C  0  RF1
```

The summary screen for the zone will appear. Note that an "s" indicates that a serial number has, in fact, been enrolled. Press [*] to accept the zone information.
If you want to delete the serial number, press [#]. This will bring you back to the “INPUT TYPE” prompt. Press [*] to change input type, loop number, and serial number.

When you have finished programming all zones, test each using the system's TEST mode. Do not use the Transmitter ID Sniffer mode for this, as it will only check for transmission of one zone on a particular transmitter, NOT the zones assigned to each additional loop, and will not verify polling loop type zones.

Sequential Mode Programming (this section has been revised from previous manuals)

Usually, serial numbers are enrolled during zone programming. If not, use #93 menu mode to enroll serial numbers (for example, if all other programming was done via downloading).

Use this mode only after all other zone information has been programmed, including transmitter loop numbers.

1. Enter data field programming mode: installer code + **8 0 0 0**.
2. From data field programming mode, press **#93** to display the "ZONE PROG?" prompt.
3. Press **0** (NO) repeatedly until the "SEQUENTIAL LEARN?" prompt appears.

SEQUENTIAL LEARN? 0=no 1=yes	To enroll or delete a device's serial number, enter **1** (yes). Enter **0** to move to skip to the next main menu option.

If the system has been set up to use 5800 series RF, and a programme tool has not been programmed, the following “PROGRAM TOOL” prompt will be displayed. If the system has not been set up to use 5800 series RF or a programme tool has already been programmed, the system will advance to the “TECHNOLOGY TYPE” prompt.

PROGRAM TOOL? 0 = NO, 1 = YES 0	If a programme tool is being used, enter "1." If not using a tool, enter "0". When a “0” is entered, the system will advance to the “TECHNOLOGY TYPE” prompt.
010 INPUT S/N: L Axxx-xxxx	If "1" is entered, the system will prompt for the unit’s serial number. Enter the programme tool’s serial number using one of the following methods: a) Enter the 7-digit serial number for the transmitter, or b) Press any button on the transmitter. The keypad should beep three times and display the serial number of the tool.
010 PROG AS BR: 3 A123-4567 3	In this example, the serial number is A123-4567. Once enrolled, the upper left-hand button of the programme tool can be pressed to ready the system for enrolling a device into the system. **The serial number for the programme tool will only remain in the system until the programming mode is exited. (Entering *97 will not delete the tool.)** Press [*] to continue or press the [#] key to back the system up to the “PROGRAM TOOL ?” prompt.
TECHNOLOGY TYPE WIRELESS 0 Default	Enter the type of device(s) to be enrolled as follows: 0 = Wireless (Default) 1 = Polling Loop 2 = Both Press [✳] to continue.
ENTER ZN NO. (000 = QUIT) 010 Zone Number Entered	Enter the first zone number to be enrolled (e.g., zone 010). Press [✳] to continue. The system will, starting with this zone number, search for the first device which had ***all*** of the following attributes pre-programmed in Zone Programming: **a) An input type of RF, UR, BR, or SL (if serial polling loop devices enabled) programmed** **b) A loop number programmed** **c) No serial number programmed**

If the first zone number entered does ***not*** have one or more of the above attributes, the system will search its database for the first zone that does and will display it on the next screen.

010 INPUT S/N Axxx xxxx	This prompt is displayed when the system has found the next zone which needs to be enrolled. The system will respond to the first serial number transmitted. A serial number may be enrolled by one of two methods: a) Enter the 7-digit serial number printed on the device. or b) Activate the device (e.g., press a button, open or close a door, etc.).

If you do ***not*** wish to enroll the zone displayed, press the # key on the keypad or the upper right-hand button on the programme tool (a long beep will be heard to verify). The following prompt will appear:

010 LEARN S/N? 0 = NO, 1 = YES 0	To enroll now, enter "1" (YES). If "0" (NO) is entered, the following prompt will appear.
ENTER ZN NUM. (000 = QUIT) 010	Enter the next zone number to be enrolled (e.g., zone 010). The system will search for that zone and will display the “ENTER ZONE NO.” prompt. If you wish to exit the enrollment mode completely, enter **000** and press [*].
010 INPUT S/N A 022-4064	The system will enroll the first serial number heard, display the serial numbers, and cause the keypad to beep twice. If the serial and loop number combination is already present in the system, the keypad will sound a single long beep and display the word "DUPLICATE" along with the serial number, and the number of the zone containing the serial/loop number combination. The system will then enter an optional confirmation mode so that the operation of the actual programmed input can be confirmed. Activate the loop input or button that corresponds to this zone. **We recommend that you confirm the programming of every device before proceeding to the next zone.**
010 CONFIRMED SL:1 A022-4064	When the system sees activity on the appropriate input, it will beep three times and display the confirmation message. Press [*] or the upper left-hand button of the programme tool when you are ready to enroll the next serial number device. The system will search for the next zone that does not have a serial number associated with it. If one is found, the system will return to the “INPUT S/N” prompt for the remaining zones. After all zones have been displayed, whether enrolled or not, the "ENTER ZN NO." prompt will appear. Enter "000" to exit the Sequential mode and return to data field programming mode.

At any time during this step, you may press the [*] key on the keypad or the upper left-hand button of the programme tool if you are satisfied with the serial and loop number combination that has been enrolled, regardless of whether or not the enrolled input has been "confirmed." This will ready the system to enroll the next serial number device.
If the incorrect device has been enrolled, press the [#] key on the keypad or the upper right-hand button of the programme tool to delete the serial number and return to the "LEARN S/N" prompt. A single long beep will be heard from the keypad to verify pressing of the upper right-hand button. Then, press "1" (Yes) or press the upper left-hand button of the programme tool (a single short beep will verify the system is ready for enrolling) and re-activate the proper device or device loop input.

When you have finished programming all zones, test each using the system's TEST mode. Do not use the Transmitter ID Sniffer mode for this, as it will only check for transmission of one zone on a particular transmitter, NOT the zones assigned to each additional loop, and will NOT verify polling loop type.

Report Code Programming

All report codes are entered using #93 menu mode programming, either through Report Code Programming, or through the Zone Programming mode while entering other zone information. In the Vista-120, reports are divided into six categories. These categories represent the main menu options found in the Report Code Programming mode. Reports and the categories in which they are found are as follows:

ALARM CODES	**RESTR, SUPV. CODES (for groups of 16 zones)**	**SYSTEM GROUP #1**
Zone Alarm Reports	Alarm Restore Trouble Trouble Restore Bypass Bypass Restore	Closing (arm away) Opening (disarm) System Low Battery Low Battery Restore AC Mains Loss AC Mains Restore Periodic Burg. Test Power Cancel Programme Tamper Callback Request
SYSTEM GROUP #2	**SYSTEM GROUP #3**	
Arm Stay Early Open Time Set, Log Reset Log 50%, 90% Full Event Log Overflow Autobypass by Zone Autobypass by User Recent Close	Early Close Late Open Late Close Failed to Open Failed to Close Auto-Arm Failed Schedule Change	

The programming sequence that follows assumes that you will be entering all reports for the system at one time. In actuality, you may skip from one main menu option to another by pressing 0 (N) to each main menu option. Main menu options are highlighted in bold text.

To enter report codes, do the following:

Enter Programme mode [Installer Code] + **8 0 0 0**. Then press #93. Enter (N) to the main menu options until the Report Code Programming option is displayed.

REPORT CODE PROG 1 = YES 0 = NO 0

Press 1 (Y) to enter to Report Code Programming mode.

Zone Alarm Reports

ALARM, ID DIGIT? **1 = YES 0 = NO 0**	Press 1 (Y) to enter alarm report codes for zones. Press 0 (N) to skip to the next main menu option.
ENTER ZONE NO. 000 = QUIT 001	Enter the zone number for which you are entering the report code. Press ✳ to continue.
001 REPORT CODE 1st 00 2nd 00 00	Enter the first digit of the alarm report code (double-digit entry) and press ✳. Enter the 2nd digit of the alarm report code. Press ✳.
ENTER ZONE NO. 000 = QUIT 001	Enter the zone number for which you are entering the report code. When all zone alarm codes have been programmed, enter 000 to Quit. Press ✳.
QUIT REPORT MENU 1 = YES 0 = NO 0	If you have completely finished entering report codes, press 1 (Y) to quit Report Code Programming mode. If you wish to enter other system report codes, enter 0(N) and press ✳.

Restore/Supervisory Codes

RESTR, SUPV. CODE **1 = YES 0 = NO 0**	Press 1 (Y) to enter restore and supervisory codes for zones.
ENTER ZN FOR GRP 000 = QUIT 001	Enter one zone for each group of 16 zones (001-016, 017-032, etc.)
ALARM RESTORE GRP 001-016 00	Enter the first digit of the alarm restore report code for this group of zones (double-digit entry). The second digit will be the ID (second) digit of the alarm report code for each zone (if programmed). Press ✳ to continue.
TROUBLE GRP 001-016 00	Enter the first digit of the trouble report code for this group of zones (double-digit entry). The second digit will be the ID (second) digit of the alarm report code for each zone (if programmed). Press ✳ to continue.
TROUBLE RESTORE GRP 001-016 00	Enter the first digit of the trouble restore code (single-digit entry) and press ✳. The second digit will be the ID (second) digit of the alarm report code for each zone (if programmed). Press ✳ to continue.
BYPASS GRP 001-016 00	Enter the first digit of the bypass report code (double-digit entry) and press ✳. The second digit will be the ID (second) digit of the alarm report code for each zone (if programmed). Press ✳ to continue.
BYPASS RESTORE GRP 001-016 00	Enter the first digit of the bypass restore report code (double-digit entry) and press ✳. The second digit will be the ID (second) digit of the alarm report code for each zone (if programmed). Press ✳ to continue.
ENTER ZN FOR GRP 000 = QUIT 017	Enter one zone for each group of 16 zones. When finished entering restore and supervisory codes for all zone groups, enter 000 and press ✳ to continue.
QUIT REPORT MENU 1 = YES 0 = NO 0	If you have completely finished entering report codes, press 1 (Y) to quit Report Code Programming mode. If you wish to enter other system report codes, enter 0 (N) and press ✳to continue.

System Group 1 Codes

SYSTEM GROUP #1?
1 = YES 0 = NO 0

To enter System Group #1 codes, press 1 (Y).

CLOSE
1st 00 2nd 00

Enter the first digit of the Closing (Arm-Away) report. Press ✳. Enter the second digit of the report. If the user number is desired as the second digit, enter 01 (not necessary for Contact ID or High Speed formats). Press ✳to continue.

Enter the rest of the codes in the same manner. Other codes in System Group #1 are:

- Opening (Disarm)
- System Low Battery
- Low Battery Restore
- AC Mains Loss
- AC Mains Restore
- Periodic Test
- Power
- Cancel
- Programme Tamper
- Callback Request

Once you have entered these report codes, the system will prompt:

QUIT REPORT MENU
1 = YES 0 = NO 0

If you have completely finished entering report codes, press 1 (Y) to quit Report Code Programming mode. If you wish to enter other system report codes, enter 0 (N) and press ✳.

System Group 2 Codes

SYSTEM GROUP #2 ?
1 = YES 0 = NO 0

To enter System Group #2 codes, press 1 (Y).

STAY
1st 00 2nd 00

Enter the first digit of the Arm-Stay report. Press ✳. Enter the second digit of the report. If the user number is desired as the second digit, enter 01 (not necessary for Contact ID or High Speed formats). Press ✳ to continue.

Enter the rest of the codes in the same manner. Other codes in System Group #2 are:

- Time Set, Log Reset
- Log 50%, 90% Full
- Event Log Overflow
- Autobypass by Zone
- Autobypass by User
- Recent Close

Once you have entered these report codes, the system will prompt:

QUIT REPORT MENU
1 = YES 0 = NO 0

If you have completely finished entering report codes, press 1 (Y) to quit Report Code Programming mode. If you wish to enter other system report codes, enter 0 (N) and press ✳ continue.

System Group 3 Codes

SYSTEM GROUP #3 ?
1 = YES 0 = NO 0

To enter System Group #3 codes, press 1 (Y).

EARLY OPEN
1st 00 2nd 00

Enter the first digit of the Early Opening report code. Press ✳. Enter the second digit of the report Code. If the user number is desired as the second digit, enter 01 (not necessary for Contact ID or High Speed formats). Press ✳ to continue.

Enter the rest of the codes in the same manner. Other codes in System Group #2 are:

- Early Close
- Late Open
- Late Close
- Failed to Open
- Failed to Close
- Auto-Arm Failed
- Schedule Change

Once you have entered these report codes, the system will prompt:

QUIT REPORT MENU
1 = YES 0 = NO 0

If you have completely finished entering report codes, press 1(Y) to quit Report Code Programming mode. If you wish to enter other system report codes, enter 0(N) and press ✳ to continue.

Programming Alpha Descriptors

General Information

- You can programme a user friendly English language description/location keypad display for all protection zones, relays, keypad panics, polling loop short, and RF receiver supervision troubles.
- Each description can be composed of a combination of words (up to a maximum of 3) that are selected from a vocabulary of 244 words stored in memory, and any word can have an "s" or " 's " added to it.
- In addition, up to 20 installer-defined words can be added to those already in memory. Thus, when an alarm or trouble occurs in a zone, an appropriate description for the location of that zone will be displayed at the keypad.
- A custom installer's message can be programmed for each partition which will be displayed when the system is "Ready" (ex. THE PETERSON'S).

1. To programme alpha descriptors, enter Programming mode, then press #93 to display "ZONE PROG?"
2. Press 0 (NO) twice to display "ALPHA PROG?".
3. Press 1 to enter ALPHA PROGRAMMING mode.
   There are 6 sub-menu selections that will be displayed one at a time.
   Press 1 to select the mode desired.
   Press 0 to display the next mode available. The alpha menu selections are:

ZONE DESCRIP.?	for entering zone descriptors.
DEFAULT SCREEN?	for creating custom message; displayed when system ready.
CUSTOM WORD?	for creating custom words for use in descriptors.
PART DESCRIP?	for creating 4-character partition names.
EXIT EDIT MODE?	Press 1 to exit back to #93 Menu Mode.

4. Refer to the sections that follow for adding alpha descriptors.

Zone Descriptors

1. **Select ZONE DESCRIPTOR mode.**
   The keypad keys perform the following functions:
   [3] Scrolls both alphabet and actual words in ascending alphabetical order.
   [1] Scrolls both alphabet and actual words in descending alphabetical order.
   [2] Adds or removes an "s" or " 's " to a vocabulary word.
   [6] Switches between alphabet and actual word list; used to accept entries.
   [8] Saves the zone description in the system's memory.
   [#] # plus zone number displays the description for that zone.
2. **Enter the zone number to which you want to assign a descriptor.**
   Ex.. Key *001 to begin entering the description for zone 1, (key *002 for zone 2, *003 for zone 3 etc.). The following will be displayed: * ZN 001 A
   Note that the first letter of the alphabet appears after the zone number, and that the zone number is automatically included with the description.
3. **Enter the descriptor for that zone**.
   Use one of two methods as follows:
   (assume, for example that the desired description for zone 1 is BACK DOOR)
   a) Press [#] followed by the 3 digit number of the first word from the fixed dictionary shown later in this section (e.g., [0][1][3] for BACK).
      Press [6] in order to accept the word and proceed, or press [8] to store the complete descriptor and exit, **or...**

b) Select the first letter of the desired description (note that "A" is already displayed). Use the [3] key to advance through the alphabet and the [1] key to go backward.
Press the [3] key repeatedly until "B" appears (press [1] to go backwards if you happen to pass it), then press key [6] to display the first available word beginning with B.
Press the [3] key repeatedly to advance through the available words until the word BACK is displayed.

To add an "s" or " 's," if you need to, press the [2] key. The first depression adds an "s," the second depression adds an " 's, " the third depression displays no character (to erase the character), the fourth depression adds an "**s**," etc.

4. **Accept the word.**
To accept the word, press the [6] key, which switches back to alphabet list for the next word, or press [8] to store the complete descriptor and exit.

5. **Select the next word.**
For selection of the next word (DOOR), repeat step 3a (word #057) or 3b, but selecting the word "DOOR".
To accept the word, press the [6] key, which again switches back to alphabet list.

6. **Store the descriptor.**
When all desired words have been entered, press key [8] to store the description in memory.

7. To review the zone descriptors, key [#] plus zone number (e.g., #01).
To edit zone descriptors, key [*] plus zone number (e.g., *01)

8. Exit zone description mode: enter 00.

Custom Words

Up to 20 installer-defined words can be added to the built-in vocabulary. Each of the 20 "words" can actually consist of several words, but bear in mind that a maximum of 10 characters can be used for each word string.

1. Select CUSTOM WORD mode. The keys perform the following functions:
[3] Advances through alphabet in ascending order.
[1] Advances through alphabet in descending order.
[6] Selects desired letter; moves the cursor 1 space right.
[4] Moves the cursor one space to the left.
[7] Inserts a space at the cursor location, erasing any character at that location.
[8] Saves the new word in the system's memory.
[*] Returns to description entry mode.

2. Enter the custom word number 01-20 you want to create.
For example, if you are creating the first word (or word string), enter 01; when creating the second word, enter 02, and so on. A cursor now appears at the beginning of the second line.

3. Type the word using one of two methods as follows:
a) Press the [#] key, followed by the two digit entry for the first letter you would like to display (e.g., [6][5] for "A"),
When the desired character appears, press the [6] key to select it. The cursor will then move to the right, in position for the next character. Press [#] plus the two digit entry for the next letter of the word.
OR...
b) Use the [3] key to advance through the list of symbols, numbers, and letters. Use the [1] key to move back through the list.
When you have reached the desired character, press the [6] key to select it. The cursor will then move to the right, in position for the next character.

5. Repeat step 3 to create the desired custom word (or words).
Use the [4] key to move the cursor to the left if necessary,
Use the [7] key to enter a blank (or to erase an existing character).
Each word or word string cannot exceed 10 characters.

6. Save the word by pressing the [8] key.
   This will return you to the CUSTOM WORD? display. The custom word (or string of words) will be automatically added to the built-in vocabulary at the end of the group of words beginning with the same letter.
   Custom words are retrieved as word numbers 250 to 269 for words 1 to 20 respectively, when using method 3a to enter alpha descriptors.
   When using method 3b, each word will be found at the end of the group of words that begin with the same letter as it does.
7. Repeat steps 2 through 6 to create up to 19 additional custom words (or word strings).
8. Exit Custom Word Mode by entering 00 at the custom word prompt.

Partition Descriptors

1. Select "Part DESCRIPT." mode. The system will ask for the partition number desired. Enter the number as a single key entry 1-8.
2. Follow the same procedure as for CUSTOM WORDS, except that partition descriptors are limited to four (4) characters (ex. WHSE for warehouse).

Custom Message Display (Installer's Message)

Normally, when the system is in the disarmed state, the following display is present on the keypad.

```
****DISARMED****
  READY TO ARM
```

Part or all of the above message can be modified to create a custom installer message for each partition. For example, ****DISARMED**** on the first line or READY TO ARM on the second line could be replaced by the installation company name or phone number for service. Note that there are only 16 character spaces on each of the two lines. To create a custom display message, proceed as follows:

1. Select DEFAULT SCREEN mode. Enter the partition number for this message. Press [*] to accept entry. The following will appear:

```
****DISARMED****
  READY TO ARM
```

   A cursor will be present at the extreme left of the first line (over the first "star"). The [6] key is used to move the cursor to the right and the [4] key to move the cursor to the left. Key [7] may be used to insert spaces or erase existing characters.
2. Create the message. For example, to replace READY TO ARM with the message SERVICE: 424-0177, proceed as follows:
   Press the [6] key to move the cursor to the right, and continue until the cursor is positioned over the first location on the second line.
   Press the [3] key to advance through the alphabet to the first desired character (in this case, "S"). Use the [1] key to go backward, when necessary. When the desired character is reached, press [6].
   The cursor will then move to the next position, ready for entry of the next character (in this example, "E"). When the cursor reaches a position over an existing character, pressing the [3] or [1] key will advance or back up from that character in the alphabet.
   Repeat until all characters in the message have been entered.
3. Save the message.
   Store the new display message in memory by pressing the [8] key.
4. The system will ask for a new partition number.
   Enter 0 to quit or 1-8 for a new partition number.

ALPHA DESCRIPTOR VOCABULARY

(For Entering Alpha Descriptors. To select a word, press [#] followed by the word's 3-digit number.)

NOTE: This vocabulary is not to be used for relay voice descriptors. See the RELAY VOICE DESCRIPTORS section when programming relay voice descriptors.

000 *(Word Space)*
• **001 AIR**
• **002 ALARM**
003 ALCOVE
004 ALLEY
005 AMBUSH
• **006 AREA**
• **007 APARTMENT**
008 ART
• **009 ATTIC**
010 AUDIO
011 AUXILIARY
• **012 BABY**
• **013 BACK**
• **014 BAR**
015 BARN
• **016 BASEMENT**
• **017 BATHROOM**
• **018 BED**
• **019 BEDROOM**
020 BELL
• **021 BLOWER**
• **022 BOILER**
023 BOTTOM
024 BOX
025 BREAK
• **026 BUILDING**
027 BURNER
028 CABINET
• **029 CALL**
030 CAMERA
031 CAR
032 CASE
033 CASH
034 CCTV
035 CEILING
036 CELLAR
• **037 CENTRAL**
038 CIRCUIT
039 CLIP
• **040 CLOSED**
041 COIN
042 COLD
043 COATROOM
044 COLLECTION
045 COMBUSTION
• **046 COMPUTER**
047 CONTACT
• **048 DAUGHTERS**
049 DELAYED
• **050 DEN**
051 DESK
• **052 DETECTOR**
• **053 DINING**
054 DISCRIMINATOR
055 DISPLAY
056 DOCK
• **057 DOOR**
058 DORMER
• **059 DOWN**
• **060 DOWNSTAIRS**
061 DRAWER
• **062 DRIVEWAY**
063 DRUG
• **064 DUCT**
• **065 EAST**
066 ELECTRIC
067 EMERGENCY
068 ENTRY
• **069 EQUIPMENT**
070 EXECUTIVE
• **071 EXIT**
072 EXTERIOR
• **073 FACTORY**
074 FAILURE
075 FAMILY
• **076 FATHERS**
• **077 FENCE**
078 FILE
• **079 FIRE**
• **080 FLOOR**
081 FLOW
082 FOIL
• **083 FOYER**
084 FREEZER
• **085 FRONT**
086 FUR
087 FURNACE
088 GALLERY
• **089 GARAGE**
• **090 GAS**
091 GATE
• **092 GLASS**
093 GUEST
094 GUN
• **095 HALL**
• **096 HEAT**
097 HIGH
098 HOLDUP
099 HOUSE
100 INFRARED
• **101 INSIDE**
102 INTERIOR
103 INTRUSION
104 JEWELRY
• **105 KITCHEN**
• **106 LAUNDRY**
• **107 LEFT**
108 LEVEL
• **109 LIBRARY**
• **110 LIGHT**
111 LINE
112 LIQUOR
• **113 LIVING**
• **114 LOADING**
115 LOCK
116 LOOP
117 LOW
• **118 LOWER**
• **119 MACHINE**
120 MAGNETIC
121 MAIDS
122 MAIN
• **123 MASTER**
124 MAT
• **125 MEDICAL**
126 MEDICINE
127 MICROWAVE
128 MONEY
129 MONITOR
• **130 MOTHERS**
• **131 MOTION**
132 MOTOR
133 MUD
• **134 NORTH**
135 NURSERY
• **136 OFFICE**
137 OIL
• **138 OPEN**
139 OPENING
• **140 OUTSIDE**
141 OVERFLOW
142 OVERHEAD
143 PAINTING
• **144 PANIC**
145 PASSIVE
• **146 PATIO**
147 PERIMETER
• **148 PHONE**
149 PHOTO
150 POINT
151 POLICE
152 POOL
• **153 POWER**
154 QUAD
155 RADIO
• **156 REAR**
157 RECREATION
158 REFRIG
159 REFRIGERATION
160 RF
• **161 RIGHT**
• **162 ROOM**
163 ROOF
164 SAFE
165 SCREEN
166 SENSOR
• **167 SERVICE**
• **168 SHED**
169 SHOCK
• **170 SHOP**
171 SHORT
172 SHOW
• **173 SIDE**
174 SKYLIGHT
175 SLIDING
• **176 SMOKE**
177 SONIC
• **178 SONS**
• **179 SOUTH**
180 SPRINKLER
181 STAMP
• **182 STATION**
183 STEREO
184 STORE
• **185 STORAGE**
186 STORY
187 STRESS
188 STRIKE
189 SUMP
190 SUPERVISED
191 SUPERVISION
192 SWIMMING
193 SWITCH
194 TAMPER
195 TAPE
196 TELCO
197 TELEPHONE
198 TELLER
• **199 TEMPERATURE**
200 THERMOSTAT
• **201 TOOL**
202 TRANSMITTER
203 TRAP
204 ULTRA
• **205 UP**
• **206 UPPER**
• **207 UPSTAIRS**
• **208 UTILITY**
209 VALVE
210 VAULT
211 VIBRATION
212 VOLTAGE
213 WALL
214 WAREHOUSE
215 WASH
• **216 WEST**
• **217 WINDOW**
218 WINE
• **219 WING**
220 WIRELESS
221 WORK
222 XMITTER
223 YARD
224 ZONE (No.)
• **225 ZONE**
226 0
227 1
228 1ST
229 2
230 2ND
231 3
232 3RD
233 4
234 4TH
235 5
236 5TH
237 6
238 6TH
239 7
240 7TH
241 8
242 8TH
243 9
244 9TH
250 Custom Word 1
to
269 Custom Word 20

CHARACTER (ASCII) CHART (For Adding Custom Words)

32	(space)	42	*	52	4	62	>	72	H	82	R
33	!	43	+	53	5	63	?	73	I	83	S
34	"	44	,	54	6	64	@	74	J	84	T
35	#	45	-	55	7	65	A	75	K	85	U
36	$	46	.	56	8	66	B	76	L	86	V
37	%	47	/	57	9	67	C	77	M	87	W
38	&	48	0	58	:	68	D	78	N	88	X
39	'	49	1	59	;	69	E	79	O	89	Y
40	(	50	2	60	<	70	F	80	P	90	Z
41	)	51	3	61	=	71	G	81	Q		

***Notes:** This factory-provided vocabulary of words is subject to change.

Bulleted words in **bold face type** are those that are also available for use by the 4285 VIP module. If using a VIP module, and words other than these are selected for alpha descriptors, the voice module will not provide annunciation of those words.

Device Programming

This menu is used to programme keypads, receivers and relay modules.
From Data Field Programming mode, press **#93** to display "ZONE PROG?". Press **0** repeatedly to display "DEVICE PROG?".

DEVICE PROG? 1=YES 0=NO	Press **1** to enter DEVICE PROGRAMMING mode.
DEVICE ADDRESS 01-30, 00=QUIT	The device address identifies the device to the control. Enter the 2-digit device address number to match the device's physical address setting (01-30). Press [✳] to accept entry. **Note:** Device Address 04 must be used for the 4285 Voice Module, if one is utilized. If not, it can be used for another device type.
DEVICE TYPE	Select the type of addressable device as follows: **00** = device not used **01** = keypad (6139) **03** = RF receiver (4281/5881/5882) **04** = output relay/trigger module (4204) **05** = telephone module (4285) **06** = LRR or Contact ID on keypad bus **09** = Vista Gateway Press [✳] to accept entry.
01 CONSOLE PART.	If device type 01 was selected, this prompt will appear. Enter the addressable device's default partition number (01 to maximum number of partitions programmed for system in field 2*00). This is the primary partition for which the device is intended to be used. Enter "9" to make this "Master" keypad for the system. Press [✳] .
01 SOUND OPTION	Addressable keypads can be individually programmed to suppress arm/disarm beeps, entry/exit beeps and chime mode beeps. This helps prevent unwanted sounds from disturbing users in other areas of the premises. Enter a number **00-03** for the keypad sounding suppression options desired for the keypad as follows: **00** = no suppression. **01** = suppress arm/disarm & entry/exit beeps. **02** =suppress chime mode beeps only. **03** = suppress arm/disarm, entry/exit **and** chime mode beeps. The screen will display the next device number to be programmed. Press **00** + [✳] to exit Menu Mode. Press *99 to exit programme mode. Enter the [Installer Code] + OFF to cancel the system's settling delay.
01 KEYPAD GBL 1=YES 0=NO	If device type 01 was selected, this prompt will appear. Press 1 to enable this particular keypad to execute global arm/disarm functions.
03 RF EXPANDER HOUSE ID 00	If device type 03 is selected, this prompt will appear. Enter the 2-digit House ID (**00-31**). This is required for 5700 series systems only, or if using a wireless keypad (5827/5827BD) with a 5800 series system.
04 MODULE PART.	If device type 05, telephone module was selected, enter the partition number 1-8 in which the telephone module is located. Press [✳] .

Device Address **00** is always set as an alpha keypad assigned to Partition 1 with no sounder suppression options.

Relay Programming

The system supports up to 32 X-10 and/or relay outputs, plus up to 64 polling loop trigger/relay outputs. Once a device is programmed, there is no distinction between an X-10, triggers, or relay output device.

Relays can be used to perform different functions and actions. Each relay must be programmed to begin one of four types of ACTIONS at a designated START event, and end that ACTION at a designated STOP event. The options used to start and stop these devices are described below, followed by the actual screen prompts and available entries.

The letter(s) in parentheses after each function described below, such as (A) after ACTION, are those that appear in the various summary displays of programmed data during programming.

ACTION (A) The "ACTION" of the device is how the device will respond when it is activated by the "START" programming. There are four different choices of actions:

- ACTIVATE for 2 SECONDS and then reset.
- ACTIVATE and REMAIN ACTIVATED until stopped by some other event.
- PULSE ON and OFF until stopped by some other event.
- NO RESPONSE when the device is not used.

START *(STT)* The "START" programming determines when and under what conditions the device will be activated. The following START options are available:

1) a. **EVENT (EV)** is the condition (Alarm, Fault, Trouble) that must occur to a zone or group of zones (zone list) in order to activate the device. These conditions apply ***only*** when a zone list is used. The different choices for "EVENT" are listed below and in "Programming Relays & Powerline Carrier devices" in the section that follows.

- ALARM — Relay action begins upon any alarm in an assigned zone in the zone list.
- FAULT — Relay action begins upon any opening (or short) of an assigned zone in the zone list.
- TROUBLE — Relay action begins upon any trouble condition on an assigned zone in the zone list.
- NO RESPONSE — Relay action is not dependent upon one of the above events.

b. **ZONE LIST (ZL)** is a group of zones to which the "EVENT" applies in order to activate a particular device. Note that there are a total of 15 zone lists that can be programmed in field *81 mode. When the selected EVENT (Alarm, Fault or Trouble) occurs in **any** zone in the selected "Start" ZONE LIST (01-15), activation of the selected device will START.

2) a. **ZONE TYPE/SYSTEM OPERATION (ZT).** If all zones to be used to start this device have the same response type, and there are no other zones of this type which are **not** to activate this device, then "ZONE TYPE" may be used instead of using a "ZONE LIST" and "EVENT" to activate the device.

If a system operation, such as "DISARMING," is to activate the device, the appropriate choice would also be entered under the "ZONE TYPE" option. **The "ZONE TYPE" option functions independently of** the "EVENT/ZONE LIST" combination.

If a specific "ZONE TYPE" is chosen, any zone of that response type going into alarm, trouble, or fault will cause the device to activate as selected in "ACTION." If the same "ZONE TYPE" is also chosen for the STOP programming, any zone of that type that *restores* will de-activate the device.

If a System Operation, such as "DISARMING" or "ANY FIRE ALARM," is to activate the device, the appropriate choice would also be entered under the "ZONE TYPE" option. The selected operation will cause the device to activate as selected in "ACTION." The different choices for "ZONE TYPE" and "SYSTEM OPERATION" are listed in "Programming Relays & Powerline Carrier devices" later in this section, and in the Programming Form.

The “ZONE TYPE” option functions independently of the “EVENT/ZONE LIST” combination.

b. **PARTITION No. (P).** The device's "Start" ZONE TYPE/SYSTEM OPERATION may be limited to an occurrence on either one partition (1-8) or any partition (0).

STOP (STP): The "STOP" programming determines when and under what conditions the device will be de-activated. The following options are available:

1) a. **RESTORE ZONE LIST (ZL)**. If a "ZONE LIST" is used as the “Stop” event, the device will de-activate when **all** the zones in that list restore from a previous fault, trouble, or alarm condition. This will occur regardless of what is programmed to "START" the device; therefore, a "RESTORE ZONE LIST" would normally only be used when a "ZONE LIST" is used to start the device.

2). a. **ZONE TYPE/SYSTEM OPERATION (ZT).** Instead of using a "RESTORE ZONE LIST", a specific zone (response) type or system operation action can be selected to de-activate the device.

If a specific "ZONE TYPE" is chosen, any zone of that response type that restores from a previous alarm, trouble, or fault condition will cause the device to de-activate.

If a "SYSTEM OPERATION" is chosen, that operation will cause the device to de-activate. The different choices for "ZONE TYPE" and "SYSTEM OPERATION" are listed in “Programming Relays & Powerline Carrier devices” later in this section, and in the Programming Form.

b. **PARTITION No. (P).** The device's "Stop" Zone Type/System Operation may be limited to an occurrence on either one partition (1-8) or any partition (0).

Programming Output Devices

1. From data field programming mode, press **#93** to display the "ZONE PROG?" prompt.
2. Press **0** (NO) to each menu option until the "RELAY PROG" prompt appears. Press **1** (YES).

   While in this mode, press [✳] to advance to next screen. Press **#** to backup to the previous screen.

```
Enter Relay No.
(00=Quit)     01
```

Enter the relay (output device) identification number **01-96**. This is a reference number only, used for identification purposes. The actual module address and relay number is programmed in the last two prompts. Press [✳] .

```
01  A  EV  ZL  ZT  P
STT 0  0   00  00  0
```

The keypad will display a summary START screen. Press [✳] to continue.

```
01      A   ZL  ZT  P
STOP  0   00  00  0
```

The keypad will display a summary STOP screen. Press [✳] to continue.

```
01  Relay Action
No Response
```

The Relay Action is the way in which the relay will respond when activated by the "start" event. Enter the desired action for this relay as follows: **0**=not used; **1**=closed for 2 secs.; **2**=stay closed; **3**=pulse on/off

```
01  Start Event
Not used
```

A relay may be activated either by an Event used in conjunction with a Zone List, **or** by a Zone Type/System Operation. If using an Event/Zone List combination, enter the event code as follows: **0**=not used; **1**=alarm; **2**=fault; **3**=trouble; **4**=restore

If not using a Zone List to activate the relay, enter **0.** Press [✳] to continue.

01 Start: Zn LIST No list	A Zone List is a set of zones that can be used to initiate the start or stop relay action. If a zone list is being used to start this relay action, enter the Zone List number **01-15**. If a zone list is not being used, enter **00**. Press ✳ to continue.
01 Start: Zn Typ	A Zone Type/System Operation can be used **instead** of an Event/Zone List combination to start the relay action. If a Zone Type/System Operation is being used, enter the 2-digit code as listed below. Press ✳ to continue.

Choices For Start/Stop Zone Types
00 = No Response (Not Used)
01 = Entry/Exit #1
02 = Entry/exit #2
03 = Perimeter
04 = Interior Follower
05 = Trouble Day/Alarm Night
06 = 24 Hr Silent
07 = 24 Hr Audible
08 = 24 Hr Aux
09 = Fire Alarm or Trouble
10 = Interior w/Delay
19 = 24 Hour Trouble
23 = No Alarm Response
(for output relay activation, such as for access control purposes)
26 = Verified Alarm
27 = Access Point
28 = ACS MLB Supervision Fail

Choices For Start/Stop System Operation:
20 = Arming-Stay
21 = Arming-Away
22 = Disarming (Code+Off)
31 = End of Exit Time
32 = Start of Entry Time
33 = Any Burglary Alarm
34 = Code + # + 71 Key Entry
35 = Code + # + 72 Key Entry
36 = At Bell Timeout **
37 = 2 Times Bell Timeout**
38 = Chime
39 = Fire Alarm
40 = Bypassing
41 = AC Power Fail
42 = System Battery Low
43 = Communication failure
44 = RF low battery
45 = polling loop failure
51 = RF receiver failure
52 = kissoff
54 = fire zone reset
55 = disarm + 1 minute
56 = XX minutes (enter XX in field 1*74; stop condition only)
57 = YY seconds (enter YY in field 1*75; stop condition only)
58 = Duress
60 = Audio/Video Alarm Verification
** Or at Disarming, whichever occurs earlier

If using options 56 and/or 57 (usually as the STOP Zone Type), data fields 1*74 and 1*75 for the respective relay timeouts for minutes and seconds must be programmed.

01 Start Part	If the starting event will be limited to occurring on a specific partition, enter the partition number (**1-8**) in which the start event will occur. Enter **0** for any partition. Press ✳ to continue.
01 Stop: Zn LIST No list	If a zone list is being used to stop this relay action, enter the zone list number **01-15**. The **restore** of all zone s on the Zone List will stop the relay. If a zone list is not being used, enter **00**. Press ✳ .
01 Stop: Zn Typ	If a Zone Type/System Operation is being used to stop the relay action, enter the 2-digit code as listed in the start Zone Type/System Operation prompt paragraph. Press ✳ to continue.
01 Stop Part	This is the partition to which the stop condition will be limited. Enter **0** for any partition. Enter **1-8** for specific partition number. Press ✳ .
Relay Group	Relays may be grouped for common activation by time driven events (commands **06-10**--see Section 20: *SCHEDULING OPTIONS* for more information). Enter **0** (no group) or **1-8** for a specific group number. Press ✳ to continue.
Restriction 1=yes 0=no	The system may have some devices which are not intended to be under end user control, such as relays activating fire doors or machinery. Enter **1** if the end user will be restricted from accessing this relay. Press ✳ to continue.

Relay Type	Enter **0** for polling loop trigger or relay. Enter **1** for 4204 relay outputs. Enter **2** for Powerline Carrier devices. Press ✳ to continue.
V-PLEX ZONE #	For polling loop trigger outputs (4208UXM)/4101SN), enter the protection zone number (010-128) linked to each output, if used. If not using a protection zone on these modules, enter the relay zone number (601-696). Be sure to enroll the module's serial number (see Zone Programming ZONE NUMBER prompt). Press ✳ to continue.
ECP ADDRESS	For relay module (4204) outputs, enter the actual relay module's address (01-15) as set by its DIP switches.
MODULE RELAY #	For 4204 relay outputs, enter the specific relay number on that module (**1-4**). Press ✳ to continue.
House Code	For Powerline Carrier devices, enter the numerical equivalent of the House Code of the device as follows: A=00 E=04 I=08 M=12 B=01 F=05 J=09 N=13 C=02 G=06 K=10 O=14 D=03 H=07 L=11 P=15
Unit Code	Enter the numerical unit code of the Powerline Carrier device (00-31). Press ✳ to continue. The keypad will display the Start and Stop summary screens again. Press ✳ to continue.

3. When all relays have been programmed, enter **00** at the "ENTER RELAY NO." prompt.
4. If defining a Zone List, continue to the next procedure in this section. If not, enter **00** + ✳ at the next two prompts. Then enter *99 to exit programming completely. After exiting, enter the [Installer Code] + OFF to cancel the system's settling delay.
5. If supervision of the relay is desired, enter a response type for the relay's corresponding supervisory zone. This is equal to 6 + 2-digit relay number. For example, if you are programming relay no. 1, the relay's supervisory zone would be 601. Programme this zone for response type 19 (24 hr. trouble) or 05 (trouble by day, alarm by night) in #93 Programming Mode.

Zone List Programming

After all relays have been programmed, upon entering **00** at the "ENTER RELAY NO." prompt, you will be asked to enter a Zone List. If a Zone List number was used to start/stop a relay, you must define the zones belonging to that list:

Enter Zone LIST 00=QUIT 00	Enter the zone list number **01-15**. Enter **00** to quit.
001 Enter Zn Num. 000=QUIT 000	Using three-digit entries, enter each zone to be included in this zone list. Press ✳ after each zone number is entered. When all zones have been entered, enter 00, then press ✳
001 Del Zn LIST? 0=No 1=Yes	Enter **0** to save the zone list entered. Enter **1** to delete that zone list.
001 Delete Zone? 0=No 1=Yes	Enter **1** to delete one or more zones in that zone list. Enter **0** if no changes are necessary. If 1 is entered, the next screen will appear, otherwise the "Enter Zone List" prompt will reappear.
001 Zn to Delete? 000=QUIT 000	Enter each zone number to be deleted from the zone list, pressing ✳ after each number.

View Zn LIST 00=QUIT 00

This will appear if **00** is pressed at the ENTER ZONE LIST prompt. Enter the zone list number that you wish to view. Press [✳] to continue.

XX ASSIGNED ZONE 000=QUIT 000

Press [✳] to scroll through all zones in that list. Enter **00** +[✳] to quit.

Press *99 to exit programme mode or continue to the next procedure in this section to programme Relay Voice Descriptors. Upon exiting programme mode, enter the [Installer Code] + OFF to cancel the system's settling delay.

Relay Voice Descriptors

If using the 4285 VIP Module, voice descriptors can be programmed for each of the 96 relays/Powerline Carrier/output trigger devices used in the system. These descriptors will be announced by the voice module when accessing the relays via the # 70 relay access mode via telephone.

Each voice descriptor can consist of up to 3 words selected from the relay voice descriptor vocabulary list (found later in this section).

The index numbers from this vocabulary list are to be used for relay voice descriptors only. For normal system voice annunciation (eg. alarms, troubles, status), use the highlighted words in the alpha vocabulary list found in the alpha programming section.

To enter relay voice descriptors, do the following:

1. From data field programming mode, press **#93** to display the "ZONE PROG?" prompt.
2. Press **0** (NO) to each menu option until the "RLY VOICE DESCR?" prompt is displayed. Follow the instructions below. While in this mode, press [✳] to advance to next screen. Press [#] to backup to previous screen.

RLY VOICE DESCR? 0=no 1=yes

Press **1** to programme voice descriptors for relays.

ENTER RELAY NO. 00=QUIT 01

Enter the 2-digit relay/X-10 module/trigger number (**01-96**) for the relay desired, or enter **00** to quit relay voice descriptor programming mode. Press [✳] .

01 ENTER DESC d1

From the relay voice descriptor vocabulary list, enter the 3-digit index number for the first word of the relay descriptor phrase. Press [✳] .

01 ENTER DESC d2

From the relay voice descriptor vocabulary list, enter the 3-digit index number for the second word of the relay descriptor phrase. If second word is not desired, press **000**. Press [✳] .

01 ENTER DESC d3

From the relay voice descriptor vocabulary list, enter the 3-digit index number for the third word of the relay descriptor phrase. If third word is not desired, press **000**. Press [✳] to accept entry.

The ENTER RELAY NO. prompt appears. Enter the next relay to be programmed. When all output devices have been programmed, enter **00** to quit.
Enter *99 to exit programme mode.

Enter the [Installer Code] + OFF to cancel the system's settling delay.

Relay Voice Descriptors and Custom Word Substitutes Vocabulary

Word	Index
Air	116
Alarm	255
And	067
Apartment	117
Appliances	161
Area	118
Attic	119
Baby	120
Back	121
Bar	122
Basement	021
Bathroom	051
Battery	053
Bed	092
Bedroom	015
Blower	123
Boiler	124
Bright	162
Building	125
Burglary	039
Call	009
Central	089
Chime	054
Closed	126
Computer	127
Console	066
Daughter's	208
Den	052
Detector	128
Device	060
Dim	163
Dining	031
Door	016
Down	008
Downstairs	184
Driveway	130
Duct	131
East	132
Eight	077
Eighth	221
Equipment	133
Exit	004
Factory	134
Father's	211
Fence	135
Fifth	218
Fire	040
First	136
Five	074
Floor	029
Four	073
Fourth	217
Foyer	137
Front	087
Garage	023
Gas	138
Glass	139
Hall	050
Heat	010
Inside	209
Kitchen	022
Laundry	140
Left	027
Library	141
Light	019
Living	030
Loading	142
Lower	094
Machine	143
Master	144
Medical	014
Mother's	212
Motion	145
Nine	078
Ninth	222
No	165
North	146
Not	012
Off	011
Office	147
On	058
One	070
Open	148
Outside	210
Panic	013
Partition	090
Patio	149
Phone	061
Power	063
Pump	166
Rear	088
Right	028
Room	018
's	007
Second	056
Service	150
Seven	076
Seventh	220
Shed	151
Shop	152
Side	153
Six	075
Sixth	219
Smoke	024
Son's	223
South	155
Stairs	006
Station	156
Storage	157
Sun	154
System	062
Temperature	158
Third	159
Three	072
Tool	213
Two	071
Up	025
Upper	187
Upstairs	183
Utility	185
West	215
Window	017
Wing	216
Zero	069
Zone	002

Custom Word Substitutes for VIP Module Annunciation

A substitute word can be programmed for each of the 20 custom words used in your alpha zone descriptions. This substitute word will be announced by the VIP module in place of the custom word that is displayed on the alpha keypad. For example, an alarm display of "John's Bedroom" could be announced as "Son's Bedroom," since there is no annunciation for the custom word "John." Note that if a substitute word is not assigned, the VIP module will not annunciate the zone descriptor at all, but will only annunciate the zone number.

To enter custom words substitutes, do the following:

1. From data field programming mode, press **#93** to display the "ZONE PROG?" prompt.

2. Press **0** (NO) to each menu option until the "CUSTOM INDEX " prompt is displayed.

```
CUSTOM INDEX?
0=no     1=yes
```

Enter **1** at this prompt.

```
CUSTOM WORD NO.
00=QUIT
```

Enter the custom word number (**01--20**) for which a voice substitute is desired. Enter **00** to quit this programming mode. Press [✳] to accept entry.

```
01 ENTER INDEX#
```

Enter the 3-digit substitute word index number from the relay voice descriptor and custom word substitutes vocabulary list found in the Relay Voice Descriptors section. Press [✳] .

The "CUSTOM WORD NO." prompt will be displayed. Enter the next custom word number to be substituted or enter **00** to quit.

RF Serial Number Clear Mode

This mode may be used in the event that an undesired transmitter has been enrolled during sequential enrolling, causing each subsequent serial number to be assigned to an incorrect zone. Performing this operation will delete all RF serial numbers, leaving all other zone information intact. You may then return to Sequential mode to re-enroll wireless transmitters.

The RF Serial Number Clear mode will not delete polling loop serial numbers.

To clear all RF wireless serial numbers, do the following:

1. Enter programming mode: installer code + 8 0 0 0.
2. From programming mode, press #93 to display the "ZONE PROG?" prompt.
3. Press 0 (NO) repeatedly until the "CLEAR RF SERIAL #?" prompt appears.

CLEAR RF SERIAL#? 1 = YES, 0 = NO 0	Enter "1" to clear all RF wireless serial numbers. The "ARE YOU SURE?" prompt is displayed as follows:
ARE YOU SURE? 1 = YES, 0 = NO 0	Enter "1" to clear all RF serial numbers. Re-enter the Sequential mode to enroll wireless transmitters.

SECTION 22
Scheduling Options

This section provides the following information:

- Main features of scheduling
- Time Window Definitions
- Open/Close Schedule Definitions
- Programming in the #80 Scheduling menu mode
- Programming:
  - Time Windows
  - Open/Close Schedules
  - Holiday Schedules
  - Time Driven Events
  - Access Schedules

Introduction To Scheduling

This section describes the scheduling features provided with this control panel.

General	• The scheduling features of this control allow certain operations to be automated, such as auto-arming, auto-disarming, auto-bypassing and un-bypassing of zones, and activating relay outputs (using powerline carrier devices or 4204 modules). • The system uses time windows for defining open/close schedules, holiday schedules and user defined temporary schedules. Scheduled events are programmed by user-friendly menu modes of programming (#80, #81 & #83 modes), explained in detail in this section. These menus take you step by step through the options.
Auto Arming	• The system can automatically arm (AWAY mode) itself at the end of a pre-determined closing (arming) time window, if the system has not been armed manually. Auto arming can be delayed three ways: by use of the auto arm delay, the auto arm warning, or by manually extending the closing (arming) time window with a keypad command. The system can also automatically bypass any open zones when auto arming.
Auto-Arm Delay	• Auto-arm delay provides a delay (grace period) before auto arming. It starts at the end of the closing window. Delay is set in 4 minute increments, up to 56 minutes in partition-specific programme field 2*05. The expiration of this delay causes auto-arm warning to start.
Auto-Arm Warning	• The auto-arm warning causes the keypad sounder to warn the user of an impending auto-arm. The warning can be set to start 01 to 15 minutes prior to arming in partition-specific programme field 2*06. During this period the keypad will beep every 15 seconds and display "AUTO ARM ALERT" ("AA" on non-alpha keypads). The beeps may be silenced by pressing any key on a keypad. When the remaining time drops below 60 seconds, the keypads will begin to beep every 5 seconds. The panel will arm at the conclusion of the auto-arm warning period.

Extend Closing Window	• A user can manually extend the arm (closing) time window by 1 or 2 hours. This is done by entering a keypad command (security code + #82), which then prompts the user to enter the desired extension time of 1 or 2 hours (refer to the SYSTEM OPERATION section of the Installation Instructions). This feature is useful if a user must stay on the premises later than usual.
Force Arm	• The Enable Force Arm option causes the panel to attempt to bypass any faulted zones prior to auto-arming (panel will perform a force-arm). This option is set in partition-specific programme field 2*08.
Auto Disarming	• The system can automatically disarm at the end of a pre-determined time window, if the system has not been disarmed manually. The disarming time can be delayed by using the auto disarm delay feature. In addition, the system can restrict disarming to a pre-determined time.
Disarm Delay	• Auto-disarm delay provides a delay before Auto disarming. This delay is added to the end of the disarm window. The delay is set in 4 minute increments, up to 56 minutes, in partition-specific programme field 2*07.
Restrict Disarming	• This option, set in partition-specific field 2*10, allows disarming by operator level users only during the disarm time window, the arming window (in case user needs to reenter premises after arming), or when the system is in alarm.
Exception Reports	• This option allows a means of reporting openings and closings by exception (sent only if event occurs outside of the predetermined opening/closing time windows). • The system sends missed open/close reports if no opening/closing occurs by the end of the corresponding window.
Time Driven Events	• By using time windows, the system can automatically activate and de-activate relays and/or power line carrier (X-10) devices at pre-determined times to turn lights or other devices on and off.: • The system can perform the same actions on a daily basis, or can be made to perform an action only once (i.e., turn on the porch light this Wednesday at 8:00pm). • The system also provides up to 20 "timers" available to the end user for the purpose of activating output devices at preset times and on preset days.
Limitation of Access By Time	• A user's access can be limited to a certain time period, during which he can perform system functions. Outside this time, that user's code will be inactive. The system provides up to 8 Access Schedules, each consisting of two Time Windows (one for opening, one for closing) for each day of the week and two time windows for holidays. The access schedules are programmed via #80 Menu Mode, and enabled for a given user when that user is added to the system. If a user tries to operate the system outside of the schedule, the alpha keypad will display "Access Denied."

Time Windows Definitions

Time Windows

- Scheduled events are based on time windows, which are simply periods of time during which an event may take place. Time windows are defined by a start time and stop time. The system supports up to 20 Time Windows. The windows are shared by the 8 partitions, and the windows are used for open/close schedules as well as for time driven event control.

Example

- To understand time windows and scheduling, take for example a store that has the following hours:

  Monday to Thursday: 9am to 6pm
  Friday 9am to 9pm
  Saturday 10am to 4pm
  Sunday Closed
  Holidays Closed

  Assume the owner desires the following time windows to allow time for employees to arm or disarm the system:

  Monday to Thursday: Open (disarm) 8am to 9am
  Close (arm) 6pm to 6:30pm
  Friday Open (disarm) 8am to 9am
  Close (arm) 9pm to 9:30pm
  Saturday Open (disarm) 9am to 10am
  Close (arm) 4pm to 4:30pm
  Sunday & Holidays Closed

- To provide these schedules, the following five time windows need to be programmed:

Window	Start	Stop	Purpose
1	8am	9am	Monday-Friday open window
2	9am	10am	Saturday open window
3	4pm	4:30pm	Saturday close window
4	6pm	6:30pm	Monday-Thurs. close window
5	9pm	9:30pm	Friday close window

- Using the #80 Menu Mode (described in a later section), the installer can programme open/close schedules by assigning each time window to a day of the week (windows are entered as 2-digit entries):

Mon	Tue	Wed	Thu	Fri	Sat	Sun	Hol
Op/Cl	Op/Cl	Op/Cl	Op/Cl	Op/Cl	Op/Cl	Op/Cl	Op/Cl
01/04	01/04	01/04	01/04	01/05	02/03	00/00	00/00

  Note: 00 is entered for those days on which the store is closed.

  When programmed, employees can arm and disarm the system within the open and close time windows respectively without causing a report to be sent to the central station (reporting by exception). At the end of these windows, the system can be programmed to automatically arm/disarm if an employee fails to arm/disarm manually (auto arm/auto disarm).

  Time driven events can be activated at different times using a window as follows:

- At the beginning of a time window
- At the end of a time window
- During a time window active period only (on at beginning of window, off at end)
- At both the beginning and end of the time window (Ex: to sound a buzzer at the beginning and end of a coffee break)

Open/Close Schedule Definitions

General Daily Schedule	• The Open/Close scheduling is controlled by one of three individual schedules. Each schedule consists of one time window for openings and one time window for closings. There are three types of schedules available: Daily, Holiday, and Temporary. • Each partition can have one daily schedule consisting of one opening window and one closing window per day.
Holiday Schedule	• A holiday schedule will override the regular daily schedule on selected holidays throughout the year.
Temporary Schedule	• The temporary schedule provides a method for the end user to override the daily and holiday schedules. It consists of one opening window and one closing window for each day of the week. The schedule automatically takes effect for up to one week, after which it is deactivated. This schedule is programmed using the #81 Temporary Schedule Menu Mode. Refer to that section for procedures.
Additional Schedules	• Additional opening and closing schedules can be programmed using the **time-driven event** programming options. For example, a schedule for normal store opening/closing can be programmed with open/close schedules, and another open/close schedule for beginning and ending lunch hour can be programmed using the time driven event schedule programming. Refer to the Time Driven Events paragraph later in this section for detailed information.
Open/Close Reports by Exception	• The system can help reduce communication traffic to the central station by using the exception reporting feature, set in partition-specific programme field 2*09. The Open/Close by exception option suppresses these reports from being sent to central station if an arm or disarm is done within the expected time window. Reports are only sent if the open/close occurs outside the assigned time window. The system keeps a record of **all** openings/closings in its event log. • In the event an opening occurs immediately following a closing during the closing window (a person who arms the system forgets something and has to reenter), the opening report (although outside of the opening window) will not be sent. (as long as the reentering occurs within the closing window); otherwise a report **will** be sent). This feature is designed to prevent false alarms to central station. • The following diagram gives an example of how the open/close by exception reporting works.

Example of Open/Close Exception Reporting & Scheduling

6:01PM 5:59AM	6AM 9AM	9:01AM 3:59PM	4PM 6PM	6:01PM 5:59AM
"Early opening" reports will be sent if system is disarmed before opening window begins. expires.	Opening Window No reports sent if system disarmed during this time window.	Auto-disarm delay begins . Auto-disarm occurs after delay. (if auto-disarm is enabled) "Missed opening" reports will be sent if user disarming has not occurred at expiration of opening window. "Late opening" reports will be sent if disarm occurs after the opening window expires "Early closing" reports will be sent if user arming occurs before the closing window begins.	Closing Window No reports sent if system armed* during this time window. * or disarmed if user reenters premises.	Auto-arm delay begins Auto-arm warning begins. Auto-arm occurs after warning expires. (if auto arm is enabled) "Missed closing" reports will be sent if user arming has not occurred at expiration of closing window. "Late closing" reports will be sent if system is armed after the closing window

Programming with #80 Scheduling Menu Mode

The #80 Scheduling Menu Mode is used to programme most of the scheduling and timed event options.
To enter this mode, the system must first be in normal operating mode (all partitions disarmed). Enter [Installer Code] + # + 80.
The following can be programmed while in this mode:

- Define time windows
- Assign open/close schedules to each partition
- Assign holiday schedules
- Programme time-driven events (for system functions and relay activation)
- Assign access control schedules

Some scheduling features are programmed in data field programming mode (installer code +800). The general programming mode scheduling fields are listed below.

System Wide Fields:	1*74 -1*75	Relay timeout values
	2*01-2*02	Summer time options
	2*11	Allow Disarming outside window if alarm occurs
Partition specific fields:	1*76	Access control relay for this partition
	2*05	Auto-arm delay value
	2*06	Auto-arm warning time
	2*07	Auto-disarm delay value
	2*08	Force arm enable
	2*09	Open/close reporting by exception
	2*10	Restrict disarm only during windows

Event driven relay activation options are programmed using the #93 Menu Mode, Relay Programming. These actions are in **response** to a programmed action. However, relay activation can also be time driven, and thus be used to initiate a desired action. Time driven relay activation options are programmed using the #80 Scheduling Menu Mode. Refer to the Time Driven Event Programming section for procedures.

Steps To Programming Scheduling Options

To use #80 Scheduling Menu Mode, do the following:

Using the worksheets:

- Define time windows (up to 20)
- Define the daily open/close schedules (one schedule per day, per partition)
- Define the holidays to be used by the system (up to 16)
- Define the holiday schedules (up to 8, one per partition)
- Define temporary schedules
- Define limitation of access times (up to 8 schedules)
- Define the time driven events (up to 20)

Using #80 Scheduling Menu Mode:

- Programme the time windows
- Programme the open/close schedules
- Programme the time driven events
- Programme the access schedules

Basic Scheduling Menu Structure

To programme schedules, enter: [Installer Code] + # + 80.
There are 5 sets of scheduling menus as shown below. Entering "1" at a displayed main menu prompt selects that menu. Prompts for programming that feature will then appear. Enter "0" to skip a menu screen and display the next menu option.

```
Time Window  ?
1 Yes   0 = No    0
```

Enter 1 to programme time windows. Refer to the Programming Time Windows section for detailed procedures. Enter 0 to move to the Open/Close Schedules prompt.

```
O/C Schedules  ?
1 Yes   0 = No    0
```

Enter 1 to programme opening and closing schedules. Refer to the Programming Open/Close Schedules section for detailed procedures. Enter 0 to move to the Holidays prompt.

```
Holidays  ?
1 Yes   0 = No    0
```

Enter 1 to programme holiday schedules. Refer to the Holiday Programming section for detailed procedures. Enter 0 to move to the Timed Events prompt.

```
Timed Events  ?
1 Yes   0 = No    0
```

Enter 1 to programme timed events for relay outputs, power line carrier devices, additional schedules or other system functions. Refer to the Programming Timed Events section for detailed procedures. Enter 0 to move to the Access Schedule prompt.

```
Access Sched. ?
1 Yes   0 = No    0
```

Enter 1 to programme access schedules. Refer to the Programming Access Schedules section for detailed procedures. Enter 0 to move to the "Quit?" prompt.

```
Quit  ?
1 Yes   0 = No    0
```

Enter 1 to quit #80 Scheduling Menu Mode and return to normal operating mode. Enter 0 to make any changes or review the scheduling programming options. If 0 is pressed, the TIME WINDOW menus are displayed.

Time Windows Definitions Worksheet

The system provides 20 time windows that are defined with start and stop times. These windows are used for various open/close and access schedules, as well as for output controls and are the basis of the scheduling system. These windows are shared among all 8 partitions. The following worksheets will help you define time windows and scheduling aspects of this system before programming the time window definitions for this installation. Note that time windows **can** span midnight.

Time Window	Start Time (HH:MM)	Stop Time (HH:MM)
1		
2		
3		
4		
5		
6		
7		
8		
9		
10		
11		
12		
13		
14		
15		
16		
17		
18		
19		
20		

Time windows are defined by a start and a stop time using the Time Windows programming menu.

Programming Time Windows

Enter Scheduling Mode by entering the installer code + # + 80. The keypad will display the Time Window programming prompt.

```
Time Window  ?
1 Yes    0 = No      0
```

Enter 1 at this main menu prompt to programme time windows.

```
Time Window # ?
01-20,  00 = Quit 01
```

Enter the 2-digit time window number to be programmed. Press * to accept the entry.
Enter 00 then * at the "TIME WINDOW #" prompt to quit Time Window programming and display the Quit ? prompt.

```
Quit ?
1 = YES  0 = NO  0
```

Enter 0 at the Quit ? prompt to return to the main menu choices and continue programming. Enter 1 to quit Scheduling Menu Mode.

```
01  TIME WINDOW
00:00AM  00:00AM
```

If a time window number was entered, the cursor will be positioned on the tens of hours digit of the start of window entry. Enter the desired start of window hour and press *. The cursor moves to the minutes. Enter the desired minutes and press *. Toggle the AM/PM indication by pressing any key 0-9 while the cursor is under the letter A/P position. Repeat for the end of window time entry .
When the entry is completed, the "TIME WINDOW #" prompt is displayed again. Enter the next time window number to be programmed and repeat the procedure.

When all time windows have been programmed, enter 00 at the TIME WINDOW # prompt to quit Time Window menus.

Since the time windows are shared among all partitions, it is important to make sure that changing a time window does not adversely affect desired actions in other partitions.

Daily Open/Close Worksheet

Write in the open & close time window numbers for each partition.

Part	Monday		Tuesday		Wednesday		Thursday		Friday		Saturday		Sunday		Holiday	
	Op	Cl	Op	Cl	Op	Cl	Op	Cl	Op	Cl	Op	Cl	Op	Cl	Op	Cl
1																
2																
3																
4																
5																
6																
7																
8																

Programming Open/Close Schedules

Each partition can be assigned one daily open/close schedule, plus a holiday open/close schedule. Temporary schedules are programmed separately, using the #81 Temporary Schedule Menu Mode. To programme additional open/close schedules, see the Time Driven Events section.
After entering Scheduling Menu Mode, press 0 until the O/C Schedules prompt appears.

O/C Schedules ? 1 Yes 0 = No 0	Enter 1 to programme opening and closing schedules.
Partition # ? 01-08, 00 = Quit 01	Enter the appropriate partition number to which the following open/close schedules will apply. Enter 00 then * at the "PARTITION #" prompt to quit O/C Schedules programming and display the Quit ? prompt.
	Enter 0 at the Quit ? prompt to return to the main menu choices and continue programming. Enter 1 to quit Scheduling Menu Mode.
Quit ? 1 = YES 0 = NO 0	
Mon P1 OP WIND.? 00:00 00:00 00	For each day in which an opening or closing schedule is desired, beginning with Monday, enter a time window number (01-20) for the displayed day's opening schedule. Enter 00 if no schedule is desired for a particular day. As the number is keyed in, the actual time that has been stored for that window will be displayed as a programming aid. Press the * key to accept the entry.
Mon P1 CL WIND.? 00:00 00:00 00	Enter the time window number for the displayed day's closing schedule. As the number is keyed in, the actual time that has been stored for the window will be displayed. Press the * key to accept the entry.
Tue P1 OP WIND.? 00:00 00:00 00	The keypad will now prompt for Tuesday's open/close schedule, etc. Follow the procedure for Mondays prompts. When the last day of the week has been programmed, the holiday opening and closing window prompts are displayed.
Hol P1 OP WIND.? 00:00 00:00 00	Enter the holiday opening time window number. Press the * key to accept the entry.
Hol P1 CL WIND.? 00:00 00:00 00	Enter the holiday closing time window number. Press the * key to accept the entry.
	When the entries are completed, the PARTITION # prompt is displayed again. Repeat this procedure for each partition in the system.

When all partitions have been programmed, enter 00 at the PARTITION # prompt to quit open/close schedules.

Holiday Definitions & Schedule Worksheet

Hol.	Partition								
	Month/Day	1	2	3	4	5	6	7	8
1	/								
2	/								
3	/								
4	/								
5	/								
6	/								
7	/								
8	/								
9	/								
10	/								
11	/								
12	/								
13	/								
14	/								
15	/								
16	/								

Programming Holiday Schedules

Up to 16 holidays can be defined for the system. After entering Scheduling Menu Mode, press 0 until the Holidays ? prompt appears.

```
Holidays  ?
1 Yes    0 = No      0
```

Enter 1 to programme holiday schedules.

```
HOLIDAY NUMBER ?
01-16,  00=Quit 01
```

Enter the 2-digit holiday number to be programmed and press * to accept entry.
Enter 00 then * at the Holiday Number prompt to quit the Holiday menus and display the Quit ? prompt.

```
Quit ?
1 = YES  0 = NO  0
```

Enter 0 at the Quit ? prompt to return to the main menu choices and continue programming. Enter 1 to quit Scheduling Menu Mode.

```
01 ENTER DATE
      00/00
```

The cursor will be positioned on the tens of months digit. Enter the appropriate month, then press * to proceed to the day field. Enter the appropriate day for the holiday and press * to accept the entry.

```
Part ?  12345678
 Key 0-8  x   x
```

Holidays can be set for any partition as follows. Press 0 to turn all partitions on or off, or else use keys 1-8 to toggle the letter x under the partition to which this holiday will apply. Press the * key when all desired partitions have been assigned.
The Holiday Number prompt will be displayed again. Repeat the procedure for each holiday to be programmed.

When all holidays have been programmed, enter 00 at the HOLIDAY NUMBER prompt to quit the holiday menus.

Time-Driven Events

These are the schedules used to activate outputs, bypass zones, etc. based on a time schedule. There are 20 of these events that may be programmed for the system, with each event governed by the previously defined time windows.
The actions that can be programmed to automatically activate at set times are relay commands, arm/disarm and zone bypassing commands, and open/close access conditions.

To fill out the worksheet:

1) **First enter the schedule number (01-20) and time window number (01-20),** and note the day of the week the action is desired.

2) **Enter the code for the desired action and action specifier.** The action codes are the events that are to take place when the scheduled time is reached. Each action also requires an action specifier, which defines what the action will affect (relay, relay group, partition, zone list, user group). The action specifier varies, depending on the type of action selected.
   The following is a list of the "Action" codes (desired actions) used when programming time driven events. Note that these codes are independent of the "relay codes" programmed during the #93 Menu Mode–Relay Programming mode.

Relay Commands

Action Code		Action Specifier
01	Relay On	Relay #
02	Relay Off	Relay #
03	Relay Close for 2 seconds	Relay #
04	Relay Close XX minutes (set in field 1*74)	Relay #
05	Relay Close YY seconds (set in field 1*75)	Relay #
06	Relay Group On	Relay Group #
07	Relay Group Off	Relay Group #
08	Relay Group Close for 2 seconds	Relay Group #
09	Relay Group Close XX minutes (set in field 1*74)	Relay Group #
10	Relay Group Close YY seconds (set in field 1*75)	Relay Group #

Arm/Disarm Commands

Activation times 1 (Beginning), 2 (End), 3 (During) are the only valid choices for automatic arming and disarming functions.
"During" can be used to arm or disarm the control for specific time only. For example, if "during" is selected with arm-stay, the system will arm-stay at the beginning of the window and disarm at the end of the window.

Action Code		Action Specifier
20	Arm-Stay	Partition(s)
21	Arm Away	Partition(s)
22	Disarm	Partition(s)
23	Force Arm Stay (Auto-bypass faulted zns)	Partition(s)
24	Force Arm Away (Auto-bypass faulted zns)	Partition(s)

The auto-arm warning (field 2*06) applies.

Bypass Commands

Activation times 1 (Beginning), 2 (End), 3 (During) are the only valid choices for bypass commands. If 3 (During) is selected for auto-bypassing, the system will bypass the zone(s) specified on a particular Zone List at the beginning of the window and unbypass the zone(s) at the end of the window. If it is selected for auto unbypassing, the system will remove the bypass of the zone(s) at the beginning of the window and will restore the bypass of the zone(s) at the end of the window.

Action Code		Action Specifier
30	Auto bypass - Zone list	Zone list #
31	Auto unbypass - Zone list	Zone list #

Open/Close Windows

Activation time 3 (During) is the only valid choice for these commands.

Action Code		Action Specifier
40	Enable Opening Window by partition	Partition(s)
41	Enable Closing Window by partition	Partition(s)
42	Enable Access Window for Access group	Access Group

3) **Enter the desired Activation time,** which refers to when the action is to take place relative to the time window. Select from:

Activation Time	Description
1	Beginning of time window
2	End of time window
3	During time window active period only (On at beginning of window, off at end). This can be used in conjunction with the arm, disarm or bypass commands to control a part of the system during the window. For example, if bypass is selected to activate during the window, the zones in the zone list will be bypassed at the beginning of the window and unbypassed at the end of the window.
4	Beginning and end of time window (ex. -Coffee break buzzer). In this example, if relay pulse was selected, the relay would pulse for 2 seconds at the beginning of the window, signaling the beginning of the coffee break. At the end of the window it would pulse again, signaling the end of coffee break.

Time Driven Events Worksheet

Sched. Num.	Time Window	Day(s) M	T	W	T	F	S	S	H	Action Desired	Action Specifier	Activation Time
1												
2												
3												
4												
5												
6												
7												
8												
9												
10												
11												
12												
13												
14												
15												
16												
17												
18												
19												
20												

Time-Driven Event Programming

The following schedules can be used to activate outputs, bypass zones, arm/disarm the system, etc. based on a time schedule. Up to 20 events can be programmed for the system. Time windows must first be defined in order to be used to trigger events.

If using Time Driven Events to control relays and/or Powerline Carrier devices, the following menu items must first be programmed using #93 Menu Mode - Relay Programming:

- Enter Relay No. (reference identification number)
- Relay Group (if applicable)
- Restriction
- Relay Type (4204 or X-10)
- House code and Unit code if X-10 devices
- ECP address and specific Relay No. if 4204 relays

After entering Scheduling Menu Mode, press **0** until the Timed Events ? prompt appears.

```
Timed Events  ?
1 Yes    0 = No     0
```

Enter **1** to programme timed events using relay outputs or X-10 devices.

```
TIMED EVENT  # ?
01-20, 00=Quit 01
```

Enter the timed event number to be programmed (01-20) and press the ✳ key. The system will then prompt the user to enter the desired action to be taken.
Enter **00** at the TIMED EVENT prompt to quit the timed event menus and display the Quit ? prompt.

Enter **0** at the Quit ? prompt to return to the main menu choices and continue programming. Enter **1** to quit Scheduling Menu Mode.

```
Quit ?
1 = YES   0 = NO
0
```

```
01 ACTION ?
none              00
```

Enter the action code for the desired action for this event number from the list at the left. This could be an output command, an arming command, or any other time-driven event. Press ✳ to accept the entry and display the appropriate action specifier prompt as follows on the next page.

Action Codes:
01=Relay On
02=Relay Off
03=Relay Close for 2 seconds
04=Relay Close XX minutes
05=Relay Close YY seconds

Actions 01-05

```
01  RELAY # ?
                00
```

Enter the relay number and press ✳ to accept entry. The Time Window ? prompt appears.

06=Relay Group On
07=Relay Group Off
08=Relay Group Close for 2 seconds
09=Relay Group Close XX minutes
10=Relay Group Close YY seconds

Actions 06-10

```
01  RELAY GRP # ?
                00
```

Enter the relay group number and press ✳ to accept entry. The Time Window ? prompt appears.

20=Arm-Stay
21=Arm Away
22=Disarm
23=Force Arm Stay
24=Force Arm Away
40=Enable Open Window by part
41=Enable Close Window by part

Actions 21-24 and 40-41

```
PART?  12345678
Key 0-8    X  X
```

Enter the partition to which the action applies. Enter 0 to select all partitions. Enter a partition number again to deselect it. Press ✳ to accept entry. The Time Window ? prompt appears.

30=Auto bypass - Zone list
31=Auto unbypass - Zone list

Actions 30-31

```
01  ZONE LIST ?
ENTER 1-8        1
```

Enter the zone list number which contains the zones to be bypassed or unbypassed. Press ✳ to accept entry. The Time Window ? prompt appears.

42=Enable Access Window for Access group(s)

Action 42

```
GROUP ? 12345678
Key 0-8     X
```

Enter the group number to which the time window will apply. Press ✳ to accept entry. The Time Window ? prompt appears.

```
01 Time Window ?
00:00 00:00    01
```

Enter the time window number (**01-20**) for which this timed event is to occur. As the number is keyed in, the actual time that has been stored for the window will be displayed. Press the ✳ to continue.

```
01 Active time ?
                0
```

Enter the activation code number from **1-4** (listed below). As the number is keyed in, the activation time will be displayed. The choices are:

- **1:** Trigger at the start of the window
- **2:** Trigger at the end of the window
- **3:** Take effect only for the duration of the window
- **4:** Trigger at both the start and the end of the window. Example - coffee break buzzer.

Press the ✳ key when the desired choice is showing.

```
Days ?  MTWTFSSH
Key 0-8  x   x
```

The system will then ask for which days the event is to be activated. Press **0** to toggle all days on or off or else press keys **1-8** to toggle the letter x under the day on or off (Monday = 1, Holiday = H = 8).

When all entries have been made, the TIMED EVENT # prompt is displayed again. Repeat the procedure for each timed event required by the installation.

When all timed events have been programmed, enter **00** at the TIMED EVENT prompt to quit this set of menus.

Limitation of Access by Time Worksheet

Limitation of Access is a means by which a user's access code is limited to working during a certain period of time.. The system provides 8 Access Schedules, each of which consists of two time windows for each day of the week and two time windows for holidays (typically one for an opening time window and the second for a closing time window). If an Access Schedule has been programmed, a user required to follow that schedule would be assigned to an Access Group of the same number (1-8) when that user is added to the system. If no limitations apply, enter 0.

Holiday Note: Holidays used for access groups are those defined for partition 1 only.

Enter the appropriate time window numbers for each access group.

Acc	Monday		Tuesday		Wed.		Thursday		Friday		Saturday		Sunday		Holiday	
Sch	W1	W2	W1	W2	W1	W2	W1	W2	W1	W2	W1	W2	W1	W2	W1	W2
1																
2																
3																
4																
5																
6																
7																
8																

Access Control Schedules

Enter Scheduling Menu Mode [Installer Code] + # 80. After entering Scheduling Menu Mode, press 0 until the Access Sched. ? prompt appears.

```
Access Sched. ?
1 Yes   0 = No    0
```

Enter 1 to programme access schedules.

```
ACCESS SCHED # ?
01-08, 00 = Quit  01
```

Enter the access control schedule number between 01 and 08. Press * to accept entry.
Enter 00 at the Access Sched # prompt to quit the Access control menus and display the Quit ? prompt.

Enter 0 at the Quit ? prompt to return to the main menu choices and continue programming. Enter 1 to quit Scheduling Menu Mode.

```
Quit ?
1 = YES  0 = NO  0
```

```
MON A1 Window 1?
00:00 00:00     00
```

Enter the first time window number from 01-20 for which this access schedule applies for the displayed day. The actual time that has been stored for the window will be displayed. Press * to continue.

```
MON  A1  Window 2 ?
00:00 00:00     00
```

Enter the second time window number from 01-20 for which this access schedule applies for the displayed day. The actual time that has been stored for the window will be displayed. Press * to continue.

```
TUE A1 Window 1?
00:00 00:00     00
```

Repeat the procedure for the other days of the week. When the last day of the week has been programmed, the holiday opening/closing windows may be entered.

```
Hol  A1  Window 1 ?
00:00 00:00 00
```

Enter the first time window number for holidays for which this access schedule applies. As the number is keyed in, the actual time that has been stored for the window will be displayed. Press * to continue.

```
Hol  A1  Window 2 ?
00:00 00:00 00
```

Enter the second time window number for holidays for which this access schedule applies. As the number is keyed in, the actual time that has been stored for the window will be displayed. Press * to continue.
When all access control schedules have been programmed, enter 00 at the Access Sched # prompt to quit this set of menus.

#81 Temporary Schedule Menu Mode

Each partition can be assigned a Temporary Schedule which will override the regular open/close schedule (and the holiday schedule). This schedule takes effect as soon as it is programmed and remains active for up to one week.

Partition/Windows		Mon	Tue	Wed	Thu	Fri	Sat	Sun
1	**Disarm Window**							
	Start Time HH:MM							
	Stop Time HH:MM							
	Arm Window							
	Start Time HH:MM							
	Stop Time HH:MM							
2	**Disarm Window**							
	Start Time HH:MM							
	Stop Time HH:MM							
	Arm Window							
	Start Time HH:MM							
	Stop Time HH:MM							
3	**Disarm Window**							
	Start Time HH:MM							
	Stop Time HH:MM							
	Arm Window							
	Start Time HH:MM							
	Stop Time HH:MM							
4	**Disarm Window**							
	Start Time HH:MM							
	Stop Time HH:MM							
	Arm Window							
	Start Time HH:MM							
	Stop Time HH:MM							
5	**Disarm Window**							
	Start Time HH:MM							
	Stop Time HH:MM							
	Arm Window							
	Start Time HH:MM							
	Stop Time HH:MM							
6	**Disarm Window**							
	Start Time HH:MM							
	Stop Time HH:MM							
	Arm Window							
	Start Time HH:MM							
	Stop Time HH:MM							
7	**Disarm Window**							
	Start Time HH:MM							
	Stop Time HH:MM							
	Arm Window							
	Start Time HH:MM							
	Stop Time HH:MM							
8	**Disarm Window**							
	Start Time HH:MM							
	Stop Time HH:MM							
	Arm Window							
	Start Time HH:MM							
	Stop Time HH:MM							

Programming Temporary Schedules

Enter [Security Code] + # + 81 to enter this mode. Note that only users with authority level of manager or higher can programme temporary schedules. Temporary schedules only affect the partition from which it is entered.

Temporary schedules can also be reused at later dates simply by scrolling (by pressing #) to the DAYS? prompt (described below) and activating the appropriate days. This should be considered when defining daily time windows.

```
Mon  DISARM WIND.
00:00AM  00:00AM
```

This prompt asks for the start and end time of disarm (opening) window. Upon entry of this mode, the cursor will be positioned on the tens of hours digit of the start time for Monday's disarm window. Enter the desired hour. Press * to move to the minutes field. The minutes are entered in the same manner. The AM/PM indication is toggled by pressing any key in the 0-9 range while the cursor is under the letter A/P position. Repeat for the stop time entry. Press the * key to move to the arming window for Monday.
Press # if no changes are desired.

```
 Mon   ARM WINDOW
00:00AM  00:00AM
```

This prompt asks for the start and end time of arm (closing) window. The cursor will be positioned on the tens of hours digit of the start time for the arm window. Enter the desired hour. Press * to move to the minutes field. The minutes are entered in the same manner. The AM/PM indication is toggled by pressing any key in the 0-9 range while the cursor is under the letter A/P position. Repeat for the stop time entry.
After the windows for that day have been completed, the system will prompt for disarm and arm time windows for the next day.
Press # if no changes are desired.

```
Tue  DISARM WIND.
00:00AM  00:00AM
```

Repeat the procedure described above for all days of the week.

When all of the days have been completed, the system will ask which days are to be activated.

```
Days ?   MTWTFSS
 Key 0-7  x   x
```

This is the prompt that actually activates the temporary schedule, and allows the temporary schedule to be customized to a particular week's needs. To select the days which are to be activated, enter 1-7 (Monday = 1). An "X" will appear under that day, indicating the schedule for that day is active. Entering a day's number again will deactivate that day. Pressing 0 will toggle all days on/off.

The temporary schedule will only be in effect for the days which have the letter x underneath them. As the week progresses, the selected days are reset to the inactive state.

When completed, press * or # to exit the temporary schedule entry mode.

#83 User Scheduling Menu Mode

The system provides up to 20 "timers" which will be available to the end user for the purpose of controlling output devices (4204 relays or Powerline Carrier devices (e.g., X-10). These timers are analogous to the individual appliance timers that might be purchased at an electrical appliance store. The output devices themselves are programmed into the system by the installer during #93 Menu Mode–Relay Programming. The end user needs only to know the output device number and its alpha descriptor.

The installer may set certain relays to be "restricted" during # 93 Menu Mode-Relay Programming. These relays may not be controlled by the end user (prevents end- user from controlling doors, pumps, etc.)

To enter this mode, the user enters [Security Code] + # + 83.

```
Output Timer # ?
 01-20, 00=Quit 01
```

Enter the output timer number to be programmed (01-20). Press * to accept entry and move to the next prompt.

Enter 00 to quit and return to normal mode.

```
06 07:00P 11:45P
PORCH LITE    04
```

If that timer number has already been programmed, a summary screen will appear. In this example:

06 = Timer #
04 = Output Device # affected by this timer
PORCH LITE = Descriptor for Output Device # 4
07:00PM = Start Time
11:45PM = Stop Time
Press * to continue.

```
06 ENTER OUTPUT#
PORCH LITE    04
```

Enter the desired output number (01-16)

As the number is entered, the descriptor changes to indicate which output device is being affected.

Note: 00 entered as the output # deletes the timer (Timer 06 in this example) and displays output descriptor "None". Devices are programmed via #93 Menu Mode.

```
06 ON TIME ?
      07:00 PM
```

Enter the ON time in 00:01 - 11:59 format.

When the display shows the desired time, press the * key to move to the AM/PM field. In this field, any of the keys 0-9 may be used to toggle the AM/PM indication. Enter 00:00 to skip.

Note: May use two commands to perform an ON one day and an OFF another day

```
06 OFF TIME ?
      11:45 PM
```

Enter the OFF time in 00:01 - 11:59 format.

When the display shows the desired time, press the * key to move to the AM/PM field. In this field, any of the keys 0-9 may be used to toggle the AM/PM indication. Enter 00:00 to skip.

```
06 Days? MTWTFSS
Key 0-7  x   x
```

To select the days which are to be activated, enter 1-7 (Monday = 1). An "X" will appear under that day, indicating the output for that day is active. Entering a day's number again will deactivate that day. Pressing 0 will toggle all days on/off.

The outputs will only be in effect for the days which have the letter x underneath them. As the week progresses, the selected days are reset to the inactive state, unless the permanent option is selected (next screen prompt). When completed, press * to continue.

```
06 Permanent ?
 0 = NO,1 = YES 0
```

Selecting "Permanent" means that this schedule will be in effect on a continuous basis. An answer of 0 means means that this schedule will be in effect for one week only. The letter "x" under the day will then be cleared.

Press * to accept entry. The system will quit User Scheduling mode and return to normal mode.

SECTION 23

System Communication

This section provides the following information:

- The process of a successful transmission
- An explanation of reporting formats for this system
- Loading communication defaults
- Contact ID report codes

A Successful Transmission

When a control panel calls the central station receiver, it waits to hear a "handshake" frequency from the receiver to confirm that the receiver is on-line and ready to receive its message. Once the panel hears the handshake it is programmed to listen for, it sends its message. The panel then waits for a "kissoff" frequency from the receiver acknowledging that the message was received and understood.

If the handshake frequency is not given or is not understood by the panel, the panel will not send its message. Once the handshake frequency is received and understood by the panel, the panel will send its message. If there is an error in the transmission (the receiver does not receive a "valid" message), the kissoff frequency will not be given by the central station receiver.

The panel will make a total of eight attempts to the primary telephone number and eight attempts to the secondary telephone number (if programmed) to get a valid message through. If the panel is not successful after its numerous attempts, the keypad will display "Communication Failure" (Alpha keypad).

Reporting Formats

The following chart defines the three sets of (handshake/kissoff) frequencies that the panel supports and the different formats that can be sent for each.

FORMAT	HANDSHAKE	TRANSMITS DATA	KISSOFF	TRANSMIT TIME
Low Speed	1400Hz	1900Hz (10PPS)	1400Hz	Under 15 secs.
3+1 4+1 4+2 Sescoa/Rad	2300Hz	1800Hz (20PPS)	2300Hz	(Standard report) Under 10 secs.
3+1 4+1 4+2 Express	1400–2300Hz	DTMF (10 cps)	1400Hz	(Standard report) Under 3 secs.
4+2 High Speed	1400–2300Hz	DTMF (10 cps)	1400Hz	Under 5 secs.
Contact ID	1400–2300Hz*	DTMF (10 cps)	1400Hz	Under 3 secs.

* Only 2300Hz for Robofon version

ADVISORY: Ademco's Contact ID reporting is capable of uniquely reporting all 128 zones of information, as well as openings and closings for all 150 users, to central stations equipped with the Ademco 685 receiver using software level 4.4 or higher. Must be level 4.7 or higher to fully support all new VISTA-120 report codes. 685 software levels below 4.4 cannot support Contact ID reporting. For information regarding updating the 685 receiver, contact your nearest Ademco Support location.

The following describes each format in greater detail.

3+1 and 4+1 Standard Formats	Comprised of a 3- (or 4-) digit subscriber number and a single digit report code (e.g. Alarm, Trouble, Restore, Open, Close, etc).
3+1 and 4+1 Expanded Formats	Comprised of a 3- (or 4-) digit subscriber number, and a two-digit report code. The first digit is displayed on the first line, followed by a second line where the first digit is repeated 3 (or 4) times and followed by the second digit. This is the "expanded" digit.
4+2 Format	Comprised of a 4-digit subscriber number and 2-digit report code.
Ademco Contact ID Reporting Format	Comprised of a 4-digit subscriber number, 1-digit event qualifier ("new" or "restore"), 3-digit event code, 2-digit Partition No., and 3-digit zone number, user number, or system status number.
Ademco Expanded High Speed	Comprised of 13 digits as follows: A 4-digit account number + eight channels of zone information (1-8 or duress plus 9-15) + one status channel, which identifies the type of events being reported in the eight zone locations.

Report	**3+1/4+1 Standard**	**3+1/4+1 Expanded**	**4+2 Low Spd or Express**
Alarm	SSS(S) A	SSS(S) A AAA(A) Z	SSSS AZ
Trouble	SSS(S) T	SSS(S) T TTT(T) t	SSSS Tt
Bypass	SSS(S) B	SSS(S) B BBB(B) b	SSSS Bb
ACMains Loss	SSS(S) E	SSS(S) E EEE(E) A_C	SSSS EA_C
Low Batt	SSS(S) L	SSS(S) L LLL(L) L_B	SSSS LL_B
Open	SSS(S) O	SSS(S) O OOO(O) U	SSSS OU
Close	SSS(S) C	SSS(S) C CCC(C) U	SSSS CU
Test	SSS(S) G	SSS(S) G GGG(G)g	SSSS Gg
Restore Alarm	SSS(S) R	SSS(S) R RRR(R) Z	SSSS RZ
AC Mains Restore	SSS(S) R_A	SSS(S) R_A $R_AR_AR_A(R_A)A_c$	SSSSR_A A_c
LoBat Res.	SSS(S) R_L	SSS(S) R_L $R_LR_LR_L(R_L)L_B$	SSSS R_LL_B
Trouble Res.	SSS(S) R_T	SSS(S) R_T $R_TR_TR_T$ (R_T)t	SSSS R_Tt
Bypass Res.	SSS(S) R_B	SSS(S) R_B $R_BR_BR_B$ (R_B)b	SSSS R_Bb

Where:

SSS or

SSSS =	Subscriber ID	C =	Close Code-1st Digit
A =	Alarm Code-1st digit	U =	User Number (1st & 2nd digits)
Z =	Typically Zone Number*-2nd digit	Gg =	Test Code (1st & 2nd digits)
Tt =	Trouble Code (1st & 2nd digits)	R =	Restore Code (Alarm)1st & 2nd digits
Bb =	Bypass Code (1st & 2nd digits)	R_Tt =	Restore Code (Trbl)1st & 2nd digits
EA_C =	AC Mains Loss Code (1st & 2nd digits)	R_Bb =	Restore Code (Byps)1st & 2nd digits
LL_B =	Low Battery Code(1st & 2nd digits)	R_AA_C =	Restore Code (AC Mains)1st & 2nd digits
O =	Open Code-1st Digit	R_LL_B =	Restore Code (Bat)1st & 2nd digits

*Zone numbers for: [✳] + [#], or [B] = 99; [3] + [#], or [C] = 96; [1] + [✳], or [A] = 95; Duress = 92

Ademco Contact ID Reporting takes the following format:

CCCC QEEE GG ZZZ

where: CCCC = Customer (subscriber) ID
Q = Event qualifier, where:
E = new event , and R = restore
EEE = Event code (3 hexadecimal digits)
GG = Partition Number (system messages show “00”)
ZZZ = Zone/contact ID number reporting the alarm, or user number for open/close reports. System status messages (AC Loss, Walk Test, etc.) contain zeroes in the ZZZ location.

Ademco Expanded High Speed Reporting events by channel:

Channels 1 through 8 could have one of the following conditions:

1 = NEW EVENT
2 = OPENING (Status Channel Always = 2)*
3 = RESTORE
4 = CLOSING (Status Channel Always = 4)*
5 = NORMAL, NO EVENT TO REPORT
6 = PREVIOUSLY REPORTED, NOT YET RESTORED

* NOTE: Channel 1 will contain the user ID 1-9, A-F if Open/Close reporting is enabled.

The status channel might have one of the following conditions:

1 = DURESS (For Duress Plus Channels 9-15 Only)
2 = OPENING
3 = BYPASS (For Channels 1-8 Only)
4 = CLOSING
5 = SUPERVISORY/TROUBLE (For Channels 1-8 Only)
6 = SYSTEM STATUS:

- AC MAINS LOSS in Channel 1
- LOW BATTERY in Channel 2
- TIME SET in Channel 3
- LOG CLEAR in Channel 3
- LOG 50% FULL in Channel 3
- LOG 90% FULL in Channel 3
- LOG OVERFLOW in Channel 3
- POWER ON RESET in Channel 4
- WALK TEST START, END in Channel 8

7 = NORMAL ALARM STATUS (Channels 1-8 Only)
9 = TEST REPORT

A typical expanded high speed report may look as follows:
1234 5115 5555 7 (Acct #1234 with alarms on channels 2 and 3)

LIMITATIONS

1. When using Ademco Expanded High Speed, remember there are only 15 channels available, plus a duress channel. If more than 15 zones are being used, they will have to share channels.
2. With Ademco Expanded High Speed reporting, channels 9-15 cannot report troubles or bypasses. Use these channels for zones that will not report these conditions.
3. Only user numbers 1-15 can be uniquely reported with open/close reports in Ademco Expanded High Speed.

Loading Communication Defaults

To help expedite the installation, the system provides 4 different communication defaults (Low Speed, Ademco Express, Ademco High Speed & Ademco's Contact ID). These defaults automatically programme industry-standard code assignments for zones, keypad panics, non-alarm and supervisory conditions, and can be loaded at any time without affecting non-communication programme fields.

You may load communications defaults at any time. However, it is recommended that the panel be defaulted first (*97) **only if no other programming has been done**. If other programming has already been done, there is no need to default the panel.

To load communication defaults, do the following:
Enter programme mode [Installer Code] + 8 0 0. Once the Programming mode is entered, first press ***94** and then enter one of the following field numbers:

TABLE OF DEFAULT PROGRAMMING COMMANDS

PRESS	TO LOAD THIS DEFAULT PROGRAMME SET
*80	Low Speed communication defaults
*81	Ademco 4 + 2 Express communication defaults
*82	Ademco High Speed communication defaults
*83	Contact ID communication defaults

TABLE OF CONTACT ID EVENT CODES

Code	Definition
110	Fire Alarm
111	Smoke Alarm (Fire w/Verification)
113	Water Flow Alarm
121	Duress
122	Silent Panic
123	Audible Panic
124	Duress Access Grant
125	Duress Egress Grant
131	Perimeter Burglary
132	Interior Burglary
133	24 Hour Burglary
134	Entry/Exit Burglary
135	Day/Night Burglary
140	ACS Zone Alarm
142	Polling Loop Short Alarm
150	24 Hour Auxiliary
200	Fire Supervisory
301	AC Loss
302	Low System Battery
305	System Reset
306	Programme Tamper
308	System Shutdown
309	Battery Test Fail
310	Ground Fault
311	System Engineer Reset
320	ACS Relay Supervision
321	Bell 1 Trouble
322	Bell 2 Trouble
332	Poll Loop Short-Trouble
333	Expansion Module Failure
338	ACS Module Low Battery
339	ACS Module Reset
342	ACS Module AC Loss
343	ACS Module Self-Test Fail
351	Main Dialer Trouble
352	Backup Dialer Trouble
354	ACS RS232 Fail
373	Fire Loop Trouble
374	Exit Error by Zone
380	Trouble (global)
381	Loss of Supervision (RF)
382	Loss of RPM Supervision
383	RPM Sensor Tamper
384	RF Transmitter Low Battery
385	High Sensitivity Maintenance Signal
386	Low Sensitivity Maintenance Signal
389	Detector Self-Test Failed
401	O/C By User
403	Power-Up Armed/Auto-Arm

Code	Definition
406	Cancel by User
407	Remote Arm/Disarm (Download)
408	Quick Arm
409	Keyswitch O/C
411	Call back Requested
421	Access Denied
422	Access Granted
423	Door Force Open
424	Egress Denied
425	Egress Granted
426	Door Prop Open
427	Access Point DSM Trouble
428	Access Point RTE Trouble
429	ACS Programme Entry
430	ACS Programme Exit
431	ACS Threat Change
432	Access Point Relay/Trigger Fail
433	Access Point DSM Shunt/Unshunt
434	Access Point RTE Shunt
441	Armed STAY
451	Early Open/Close
452	Late Open/Close
453	Fail to Open
454	Fail to Close
455	Auto-arm Fail
457	Exit Error by User
459	Recent Close
501	ACS Reader Disable
520	ACS Relay Disable
521	Bell 1 Bypass
522	Bell 2 Bypass
524	Auxiliary Relay Bypass
551	Main/Backup Dialer Bypass
570	Bypass
576	ACS Zone Shunt
577	ACS Point Bypass
602	Communicator Test
604	Fire Test
607	Burglary Walk Test
608	Off-Normal
611	Fire Walk Test – Point Tested
612	Fire Walk Test – Point Not Tested
621	Event Log Reset
622	Event Log 50% Full
623	Event Log 90% Full
624	Event Log Overflow
625	Time/Date Reset
631	Exception Schedule Change
632	Access Schedule Change

Field #	Low Speed	Contact ID	High Speed	Express
*46, *48	Choose transmission speed and frequency	No effect	No effect	No effect
*52, *53	Send as either 4+2 or expanded	No effect	No effect	No effect
*79, *80	Enables alarm restores	Enables alarm restores	Enables alarm restores	Enables alarm restores
*49	Add checksum digit	No effect	Add checksum digit	No effect
*50	Sescoa/Radionics; Selects fixed digit time instead of fixed interdigit.	No effect	No effect	No effect
NOTES	Note: Low Speed will **not** send 3+2 messages. Zone ID digit is suppressed.			

Loading communication defaults results in the following

Low Speed (*94*80)

- Selects low speed, standard format, with no checksum, for both phone numbers.
- Assigns the following report codes:
  - 03 for zones 002-047, 056-128
  - 01 for zones 001 & 048-055 (fire zones)
  - 02 for zones 062, 063 (panic trans), & 995, 996, 999 (keypad panics)
  - 09 for all alarm restores
- Enables all zone type restores.

For "expanded" reporting, enable fields *52 and *53.

ADEMCO Express (*94*81)

- Selects Ademco express reporting format, with checksum, for both phone numbers.
- Report codes for zones 1-99, RF receiver, and keypad panics are sent as their respective zone ID numbers (01-86, 88-91, 95-99), Duress is sent as "DD". Alarm restore is "E" + 2nd digit.
- Enables all zone type restores.

ADEMCO High Speed (*94*82)

- Selects Ademco High Speed format, with no checksum, for both phone numbers.
- Zone reporting is assigned to channels as described later in this section.
- Enables all zone type restores.
- Enables Duress to be sent.

ADEMCO's Contact ID (*94*83)

- Selects Contact ID format for both phone numbers.
- Reporting is enabled for all zones.
- Enables all zone type restores.
- Refer to the SYSTEM COMMUNICATION section for event code definitions.

COMMUNICATION DEFAULTS for LOW SPEED FORMAT (*94*80)

*45 PRIMARY FORMAT [0] Ademco Low Speed

*46 LOW SPEED FORMAT (Primary) [0] Ademco Low Speed

*47 SECONDARY FORMAT [0] Ademco Low Speed

*48 LOW SPEED FORMAT (Sec.) [0] Ademco Low Speed

*49 CHECKSUM VERIFICATION [0] [0]
No checksum Primary Secondary

*50 SESCOA/RADIONICS SELECT [0] Radionics

*51 DUAL REPORTING [0] no

*52 STANDARD/EXPANDED REPORT FOR PRIMARY
[0] [0] [0] [0] [0] [0] standard
Alarm Rstr Bypass Trbl Opn/Cls Low Bat

*53 STANDARD/EXPANDED REPORT FOR SECONDARY
[0] [0] [0] [0] [0] [0] standard
Alarm Rstr Bypass Trbl Opn/Cls Low Bat

COMMUNICATION DEFAULTS for ADEMCO EXPRESS FORMAT (*94*81)

*45 PRIMARY FORMAT [3] Ademco Express

*46 LOW SPEED FORMAT (Primary) [0]

*47 SECONDARY FORMAT [3] Ademco Express

*48 LOW SPEED FORMAT (Sec.) [0]

*49 CHECKSUM VERIFICATION [0] [0]
No checksum Primary Secondary

*50 SESCOA/RADIONICS SELECT [0] Radionics

*51 DUAL REPORTING [0] no

*52 STANDARD/EXPANDED REPORT FOR PRIMARY
[0] [0] [0] [0] [0] [0] standard
Alarm Rstr Bypass Trbl Opn/Cls Low Bat

*53 STANDARD/EXPANDED REPORT FOR SECONDARY
[0] [0] [0] [0] [0] [0] standard
Alarm Rstr Bypass Trbl Opn/Cls Low Bat

COMMUNICATION DEFAULTS for ADEMCO EXPANDED HIGH SPEED FORMAT (*94*82)

*45 PRIMARY FORMAT [2] Ademco Exp. High Spd

*46 LOW SPEED FORMAT (Primary) [0]

*47 SECONDARY FORMAT [2] Ademco Exp. High Spd

*48 LOW SPEED FORMAT (Sec.) [0]

*49 CHECKSUM VERIFICATION [0] [0]
No checksum Primary Secondary

*50 SESCOA/RADIONICS SELECT [0] Radionics

*51 DUAL REPORTING [0] no

*52 STANDARD/EXPANDED REPORT FOR PRIMARY
[0] [0] [0] [0] [0] [0] standard
Alarm Rstr Bypass Trbl Opn/Cls Low Bat

*53 STANDARD/EXPANDED REPORT FOR SECONDARY
[0] [0] [0] [0] [0] [0] standard
Alarm Rstr Bypass Trbl Opn/Cls Low Bat

COMMUNICATION DEFAULTS for ADEMCO's CONTACT ID FORMAT (*94*83)

*45 PRIMARY FORMAT [1] Ademco Contact ID

*46 LOW SPEED FORMAT (Primary) [0]

*47 SECONDARY FORMAT [1] Ademco Contact ID

*48 LOW SPEED FORMAT (Sec.) [0]

*49 CHECKSUM VERIFICATION [0] [0] No checksum
Primary Secondary

*50 SESCOA/RADIONICS SELECT [0] Radionics

*51 DUAL REPORTING [0] no

*52 STANDARD/EXPANDED REPORT FOR PRIMARY
[0] [0] [0] [0] [0] [0] standard
Alarm Rstr Bypass Trbl Opn/Cls Low Bat

*53 STANDARD/EXPANDED REPORT FOR SECONDARY
[0] [0] [0] [0] [0] [0] standard
Alarm Rstr Bypass Trbl Opn/Cls Low Bat

Communication Defaults For Zones

To programme report codes, see *Report Code Programming* in the *#93 MENU MODE PROGRAMMING* section.

ZONE #	LOW SPEED		EXPRESS		HIGH SPEED		CONTACT ID	
	1st	2nd	1st	2nd	1st	2nd	1st	2nd
001	01	00	10	01	01	00	01	00
002	01	00	10	02	01	00	02	00
003	03	00	10	03	02	00	03	00
004	03	00	10	04	02	00	04	00
005	03	00	10	05	02	00	05	00
006	03	00	10	06	02	00	06	00
007	03	00	10	07	02	00	07	00
008	03	00	10	08	02	00	08	00
009	03	00	10	09	03	00	09	00
010	03	00	01	10	03	00	10	00
011	03	00	01	01	03	00	11	00
012	03	00	01	02	03	00	12	00
013	03	00	01	03	03	00	13	00
014	03	00	01	04	03	00	14	00
015	03	00	01	05	03	00	15	00
016	03	00	01	06	03	00	01	00
017	03	00	01	07	04	00	02	00
018	03	00	01	08	04	00	03	00
019	03	00	01	09	04	00	04	00
020	03	00	02	10	04	00	05	00
021	03	00	02	01	04	00	06	00
022	03	00	02	02	04	00	07	00
023	03	00	02	03	04	00	08	00
024	03	00	02	04	04	00	09	00
025	03	00	02	05	04	00	10	00
026	03	00	02	06	04	00	11	00
027	03	00	02	07	04	00	12	00
028	03	00	02	08	04	00	13	00
029	03	00	02	09	04	00	14	00
030	03	00	03	10	04	00	15	00
031	03	00	03	01	04	00	01	00
032	03	00	03	02	05	00	02	00
033	03	00	03	03	05	00	03	00
034	03	00	03	04	05	00	04	00
035	03	00	03	05	05	00	05	00
036	03	00	03	06	05	00	06	00
037	03	00	03	07	05	00	07	00
038	03	00	03	08	05	00	08	00
039	03	00	03	09	05	00	09	00
040	03	00	04	10	05	00	10	00
041	03	00	04	01	05	00	11	00
042	03	00	04	02	05	00	12	00
043	03	00	04	03	05	00	13	00
044	03	00	04	04	05	00	14	00
045	03	00	04	05	05	00	15	00
046	03	00	04	06	05	00	01	00
047	03	00	04	07	05	00	02	00
048	01	00	04	08	01	00	03	00
049	01	00	04	09	01	00	04	00
050	01	00	05	10	01	00	05	00
051	01	00	05	01	01	00	06	00
052	01	00	05	02	01	00	07	00
053	01	00	05	03	01	00	08	00
054	01	00	05	04	01	00	09	00
055	01	00	05	05	01	00	10	00
056	03	00	05	06	06	00	11	00
057	03	00	05	07	06	00	12	00

COMMUNICATION DEFAULTS FOR ZONES (cont'd)

ZONE #	LOW SPEED		EXPRESS		HIGH SPEED		CONTACT ID	
	1st	2nd	1st	2nd	1st	2nd	1st	2nd
058	03	00	05	08	06	00	13	00
059	03	00	05	09	06	00	14	00
060	03	00	06	10	06	00	15	00
061	03	00	06	01	06	00	01	00
062	02	00	06	02	09	00	02	00
063	02	00	06	03	09	00	03	00
064	03	00	06	04	06	00	04	00
065	03	00	06	05	14	00	05	00
066	03	00	06	06	14	00	06	00
067	03	00	06	07	14	00	07	00
068	03	00	06	08	14	00	08	00
069	03	00	06	09	14	00	09	00
070	03	00	07	10	14	00	10	00
071	03	00	07	01	14	00	11	00
072	03	00	07	02	14	00	12	00
073	03	00	07	03	15	00	13	00
074	03	00	07	04	15	00	14	00
075	03	00	07	05	15	00	15	00
076	03	00	07	06	15	00	01	00
077	03	00	07	07	15	00	02	00
078	03	00	07	08	15	00	03	00
079	03	00	07	09	15	00	04	00
080	03	00	08	10	15	00	05	00
081	03	00	08	01	13	00	06	00
082	03	00	08	02	13	00	07	00
083	03	00	08	03	13	00	08	00
084	03	00	08	04	13	00	09	00
085	03	00	08	05	13	00	10	00
086	03	00	08	06	13	00	11	00
087	03	00	08	07	13	00	12	00
088	03	00	08	08	13	00	13	00
089	03	00	08	09	13	00	14	00
090	03	00	09	10	13	00	15	00
091	03	00	09	01	13	00	01	00
092	03	00	09	02	13	00	02	00
093	03	00	09	03	13	00	03	00
094	03	00	09	04	13	00	04	00
095	03	00	09	05	13	00	05	00
096	03	00	09	06	13	00	06	00
097	03	00	09	07	13	00	07	00
098	03	00	09	08	13	00	08	00
099	03	00	09	09	13	00	09	00
100	03	00	10	10	13	00	10	00
101	03	00	10	01	13	00	11	00
102	03	00	10	02	13	00	12	00
103	03	00	10	03	13	00	13	00
104	03	00	10	04	13	00	14	00
105	03	00	10	05	13	00	15	00
106	03	00	10	06	13	00	01	00
107	03	00	10	07	13	00	02	00
108	03	00	10	08	13	00	03	00
109	03	00	10	09	13	00	04	00
110	03	00	11	10	13	00	05	00
111	03	00	11	01	13	00	06	00
112	03	00	11	02	13	00	07	00
113	03	00	11	03	13	00	08	00
114	03	00	11	04	13	00	09	00

COMMUNICATION DEFAULTS FOR ZONES (cont'd)

ZONE #	LOW SPEED		EXPRESS		HIGH SPEED		CONTACT ID	
	1st	2nd	1st	2nd	1st	2nd	1st	2nd
115	03	00	11	05	13	00	10	00
116	03	00	11	06	13	00	11	00
117	03	00	11	07	13	00	12	00
118	03	00	11	08	13	00	13	00
119	03	00	11	09	13	00	14	00
120	03	00	12	10	13	00	15	00
121	03	00	12	01	13	00	01	00
122	03	00	12	02	13	00	02	00
123	03	00	12	03	13	00	03	00
124	03	00	12	04	13	00	04	00
125	03	00	12	05	13	00	05	00
126	03	00	12	06	13	00	06	00
127	03	00	12	07	13	00	07	00
128	03	00	12	08	13	00	08	00
601	00	00	00	00	00	00	00	00
602	00	00	00	00	00	00	00	00
603	00	00	00	00	00	00	00	00
604	00	00	00	00	00	00	00	00
605	00	00	00	00	00	00	00	00
606	00	00	00	00	00	00	00	00
607	00	00	00	00	00	00	00	00
608	00	00	00	00	00	00	00	00
609	00	00	00	00	00	00	00	00
610	00	00	00	00	00	00	00	00
611	00	00	00	00	00	00	00	00
612	00	00	00	00	00	00	00	00
613	00	00	00	00	00	00	00	00
614	00	00	00	00	00	00	00	00
615	00	00	00	00	00	00	00	00
616	00	00	00	00	00	00	00	00
800	00	00	00	00	00	00	00	00
801	00	00	00	00	00	00	00	00
802	00	00	00	00	00	00	00	00
803	00	00	00	00	00	00	00	00
804	00	00	00	00	00	00	00	00
805	00	00	00	00	00	00	00	00
806	00	00	00	00	00	00	00	00
807	00	00	00	00	00	00	00	00
808	00	00	00	00	00	00	00	00
809	00	00	00	00	00	00	00	00
810	00	00	00	00	00	00	00	00
811	00	00	00	00	00	00	00	00
812	00	00	00	00	00	00	00	00
813	00	00	00	00	00	00	00	00
814	00	00	00	00	00	00	00	00
815	00	00	00	00	00	00	00	00
816	00	00	00	00	00	00	00	00
817	00	00	00	00	00	00	00	00
818	00	00	00	00	00	00	00	00
819	00	00	00	00	00	00	00	00
820	00	00	00	00	00	00	00	00
821	00	00	00	00	00	00	00	00
822	00	00	00	00	00	00	00	00
823	00	00	00	00	00	00	00	00
824	00	00	00	00	00	00	00	00
825	00	00	00	00	00	00	00	00
826	00	00	00	00	00	00	00	00

COMMUNICATION DEFAULTS FOR ZONES (cont'd)

ZONE #	LOW SPEED		EXPRESS		HIGH SPEED		CONTACT ID	
	1st	2nd	1st	2nd	1st	2nd	1st	2nd
827	00	00	00	00	00	00	00	00
828	00	00	00	00	00	00	00	00
829	00	00	00	00	00	00	00	00
830	00	00	00	00	00	00	00	00
831	00	00	00	00	00	00	00	00
988	07	00	08	08	07	00	09	00
990	07	00	09	00	08	00	10	00
995	02	00	09	05	10	00	04	00
996	02	00	09	06	11	00	05	00
997	07	00	09	07	07	00	12	00
999	02	00	09	09	12	00	06	00
ALARM RST.	09	00	14	00	01	00	01	00
TROUBLE	05	00	15	00	01	00	01	00
TRBLE. RST	09	00	14	00	01	00	01	00
BYPASS	00	00	00	00	00	00	00	00
BYPASS RST.	00	00	00	00	00	00	00	00
DURESS (992)	02	00	13	13	01	00	11	00

SECTION 24
Downloading

This section provides the following information:

- General information about downloading
- Getting on-line with a control panel
- Advisories
- Access security
- Connecting the 4100SM module for direct wire downloading

General Information

Downloading allows the operator to remotely access, programme, and control the security system over normal telephone lines. Anything that can be done directly from the keypad can be done remotely, using ADEMCO's VLINK® downloading software. To communicate with the control panel, the following is required:

1. An IBM PC compatible 286, 386, 486 or Pentium computer with at least 1MB RAM, a hard disk with 12MB available disk space, running MS DOS 3.1 or higher operating system.
2. An Ademco designated compatible modem.
3. Alternately, you may use a 4100SM interface module to "direct wire" the control panel to your computer at the site (see Figure .)
4. V-LINK® DOWNLOADING software, from ADEMCO. This software is available on both 3-1/2" and 5-1/4" diskettes, and includes a complete User's Manual.

Getting On-Line with a Control Panel

At the protected premises, the Control panel must be connected to the existing telephone line (refer to the PHONE LINE CONNECTIONS section). No programming of the panel is required before downloading to an initial installation.

To download, do the following:

1. Enter the installer code + [#] + [5]. The panel temporarily enables a ring count of 5 and sets the Download Callback option to "1" (callback not required).
2. Call the panel using the downloader software set to "FIRST COMMUNICATION" mode.
3. The downloader will establish a session with no callback. The panel information can then be downloaded.
   In order to remotely access, control, or programme the alarm panel, a "link" must be established between the computer and the control panel, as follows:
   a. The computer calls up the Control panel. (The phone number for each customer is entered into the customer's account file on the computer).
   b. The Control panel "answers" at the pre-programmed ring count and executes a handshake with the computer.
   c. The computer sends a request for call-back to the Control, unless call-back is not required.
4. The panel acknowledges the request and hangs up. During the next few seconds, the Control will process the request making sure certain encrypted information, received from the computer, matches data in its own memory.
5. Upon a successful match, the Control panel will seize the phone line and call the computer back, unless call-back is not required.
6. The computer answers, usually by the second ring, and executes a handshake with the panel.
6. The panel then sends other default information to the computer. If this information matches the computer's information, a successful link is established. This is known as being "ON-LINE".

1. Alarm and trouble responses and reports are only disabled during EEROM update during on-line time. Should an event occur during this time, the response will take place and the report will go through as soon as the remote access sequence is completed. Alarm and trouble conditions are not ignored, they are simply delayed. At other times during the on-line session, the control will signal the PC that an alarm has occurred and will break off the session to transmit alarms.
2. The keypads are inactive during downloading communication, and resume normal functions after hang up. All keypad entries are ignored during on-line time.

On-Line Control Functions

The following functions can be performed while on-line with a control panel:

- Arm the System in the Away Mode; Disarm the System (if field *38 Armed Restriction is not programmed)
- Bypass a Zone
- Force the System to Accept a New Programme Download
- Shut Down Communication (dialler) Functions (non-payment of monitoring fees in an owned system)
- Shut Down all Security System Functions (non-payment for a leased system)
- Inhibit Local Keypad Programming (prevents takeover of your accounts)
- Leave a message for customer
- Command the System to Upload a Copy of its Resident Programme to the office
- Read: Arming Status, AC Mains Status, List of Faulted Zones, List of Bypassed Zones, 224 Event Log, List of Zones Currently in Alarm, List of Zones Currently in Trouble
- Set the Real-Time clock.
- Initiate a test report from the control.
- Command relays/triggers to activate and de-activate.

Access Security

Accessing the Control from a remote location is protected against compromise by the use of 4 levels of protection:

1. Security Code Handshake: The subscriber's account number as well as an 8-digit ID number (known only to the office) must be matched between the Control and computer.
2. Hang-Up and Call-Back: The Control panel will "hang-up" and call the computer back at the pre-programmed number only if the security codes match.
3. Data Encryption: All data that is exchanged between the computer and Control is encrypted to reduce the possibility of anyone "tapping" the line and corrupting data. Additionally, all account files are encrypted to prevent them from being opened on another installer's VLink® downloading software package.
4. Operator Access Levels: Up to 15 operators can have access to the DOWNLOADER, each having their own log-on code. However, each operator can be assigned one of three levels of access in both FILE and COMMAND functions, as follows:

FILE ACCESS:

Read Only: able only to look at the database; cannot change any information, and cannot see the customer's access codes.

Part Read/Write: able to look at and change all information. except the customer's access codes.

Full Read/Write: able to look at and change any and all information in the database.

CONTROL/COMM ACCESS:

Read Only: able only to Upload and arm the system. Not able to DISARM, BYPASS, or change any information.

Part Read/Write: able to ARM, BYPASS, UPLOAD, DOWNLOAD but cannot shutdown the system.

Full Read/Write: able to perform all control and status commands, as well as shutdown all or part of the system.

NOTES:

1. Each time the Control panel is accessed successfully, a PROGRAMME TAMPER report (*81) is sent to central station, if programmed.
2. When downloading, the keypad displays "MODEM COMM."
3. Whenever a download or a save is done, an automatic time stamp is done, indicating the date and time of the last download (or save) and the operator ID number.
4. The average time for a complete download, including initial call-up, hang-up and call-back is under 4 minutes.
5. A complete hard copy of each individual account can be obtained by connecting a printer to the computer. Refer to your computer owner's manual or contact your distributor for printer recommendations.

Connecting a 4100SM Module for Direct Wire Downloading

The Control can be downloaded without using a modem or telephone line by using VLINK® Software and a 4100SM Serial Module. The direct wire downloading connection is to be temporary, and is not part of the permanent installation. Direct wire downloading is meant as a tool for the installer during the installation process.

The connections between the Control and the 4100SM are different than those shown in the 4100SM Installation Instructions. See the diagram below for correct connections. In addition, when the "green" wire is referred to in step 2 of the IN CASE OF DIFFICULTY section of the 4100SM Instructions, **use the "violet" wire.**

Connector J8, located above connector J7 on the right hand side of the main PC board (see the *Summary of Connections* diagram on the inside back cover of this manual), is intended to be interfaced to either a local serial printer (see *EVENT LOG PRINTER CONNECTIONS*) or a computer. Make connections to a computer as shown below. **Note that the violet wire connection for a computer differs from that used when connecting a serial printer.**

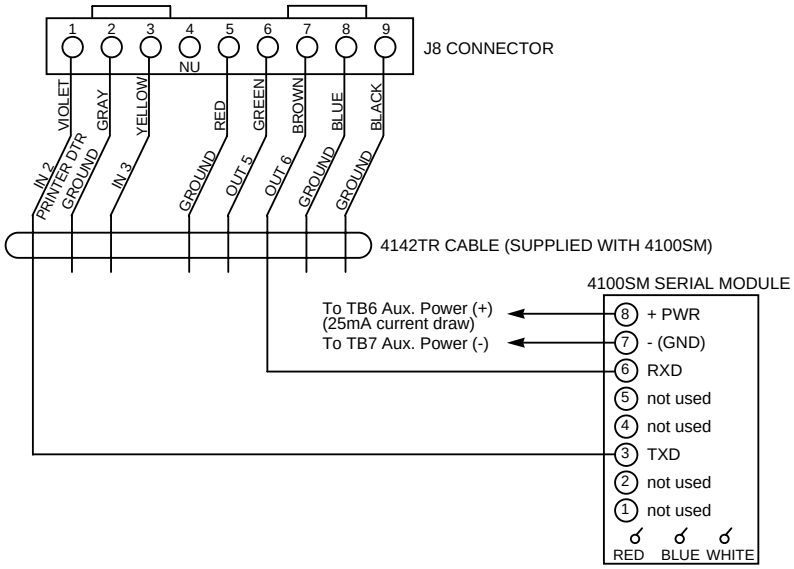

Figure 31: Direct Wire Downloading Connections

SECTION 25

Setting The Real - Time Clock

This section provides the following information:

- General information about the real-time clock
- Setting the time and date

General Information

This system provides a real-time clock, which must be set in order for the system's event log to keep track of events by time and date. It must also be set in order to execute scheduling programs (time-driven events).

Use a keypad to set the real-time clock, or set the clock via the Downloader software. Only users with installer or master authority level can set the real-time clock.

Setting the Time and Date

1. Enter installer or master code + **# 63**. Typical display shows

TIME/DATE — THU 12:01 AM 01/01/90

2. The day of the week is automatically calculated based on the date entered. Time and date entries are made by simply entering the appropriate hour, minute, day, month, and year.

   Press the [✳] key to accept the entered value. The cursor then moves to the right.

   Press the [✳] key to move the cursor to the left of the display, to the previous position.

   Enter the correct hour then press [✳] to move to the minutes and make the correct entry.

   Press [✳] again, then press any key 0-9 to set AM/PM (or enter in 24 hour format, if selected in field 1*55). Press any key again to change AM to PM, or PM to AM.

   Press [✳] to move cursor to the day position and enter the correct day using a 2-digit entry.

   Press [✳] and enter the correct month.

   Press [✳] and enter the correct year.

3. Exit clock mode by pressing the [✳] key after the cursor is in the year position.

PART 3

SYSTEM OPERATION AND TESTING

SECTION 26

Security Access Codes

This section provides the following information:

- General information about security access codes
- Definition of user authority levels
- How to add a user access code
- How to change a user access code
- How to delete a user access code

General Information

This system allows a total of 150 security access codes to be allocated, each identified by a user ID number.

Note that regardless of the number of partitions each code has access to, it occupies only one user slot in the system. If a particular code is not used in all partitions, that user ID number cannot be used again.

The Quick Arm feature can also be programmed (partition-specific programme field *29), which allows the [#] key to be pressed instead of entering the security code when arming the system. The security code must always be entered to disarm the system.

1. User #2 must be programmed for the Quick Arm feature to function.
2. In order to protect the system from attempts to defeat the security access code by trying many possible codes in sequence, the system has code tampering protection. If someone enters 20 keystrokes at a keypad within a 15 minute period, all further keypad entries from keypads in this partition will be ignored for the 15 minute period. This protection will then be repeated indefinitely.

User Codes & Levels Of Authority

Each user of the system can be assigned a level of authority (tells system what system functions that user is authorized to do), and can have different levels of authority within different partitions. In general, users can perform most system functions, including Test and Chime modes, but certain authority levels restrict disarming, bypassing or the assigning of other user codes. These restrictions are noted in the descriptions below.

Use the "View Capabilities" keypad function to view the partitions and authority levels for which a particular user is authorized. In highest to lowest ranking, these levels are described below.

Auth	Title
0	Installer
1	Master
2	Manager
3	Operator level A
4	Operator level B
5	Operator level C
6	Duress

Level 0: Installer (User 1)

- Programmed in field *00 (default=4-1-4-0). Installer open/close reporting is selected in field *39.
- Can perform all system functions (arm, disarm, bypass, etc.), but **cannot disarm** if armed by another code (or by Quick Arm).
- Can add, delete, or change all other authority level codes, and can select open/close reports for any user.
- Is the only code that can enter programme mode, but even this can be prevented by exiting programme mode using *98. (The only way to access Programming mode if this done is by powering down the system, powering up again, and then pressing both the * and # keys at the same time within 30 seconds of power up.)
- Must programme at least one master code during initial installation. Master codes are codes intended for use by the primary user(s) of the system.

Open/Close Reporting

Note: When adding a user, the system will only prompt for Open/Close reporting capability if the user is being added by the Installer. When a Master or Manager adds a new user, the new user's Open/Close reporting enable will be the same as that of the Master or Manager adding the user. If Open/Close reports are required to be selectable by the Master or Manager, the Installer should assign two Master or Manager user codes: one with Open/Close reporting enabled, and one without.

Note that Open/Close reporting of Quick Arm is enabled if User 2 is enabled for Open/Close reporting, and that Quick Arm reports as User 0. In order for Quick Arm reports to be sent for all partitions, User #02 must have authority and Open/Close enabled for all partitions. If a code with access to all partitions is not desired, it is suggested that user #02 be assigned authority level 5 in all partitions, and that the code be kept secret. Authority level 5 cannot disarm the system unless armed by that user.

Level 1: Master Codes

- Can perform all normal system functions
- Can be used to assign up to 148 lower level codes, which can be used by other users of the system.
- Cannot assign anybody a level of 0 or 1.
- May change his own code.
- Can add, delete, change manager or operator codes. Each user's code can be individually eliminated or changed at any time.
- Open/close reporting of added users are **same** as that of the master or manager adding the new user.

Level 2: Manager Codes

- Can perform all system functions (Arm, Disarm, Bypass, etc.) programmed by Master.
- May add, delete or change other users of the system below this level (Manager cannot assign anybody a level of 0, 1, or 2).
- May change his own code.
- Open/close reporting of added users will be same as his own (enabled or disabled as assigned by installer or master).

Levels 3-5: Operator Codes

- Can arm and disarm the system to the authority assigned, but cannot add or modify any user code.
- May operate a partition with one of the three OPERATOR authority levels A through C listed below.

Level	Title	Functions Permitted
3	Operator A	Arm, Disarm, Bypass
4	Operator B	Arm, Disarm
5	Operator C	Arm, Disarm only if armed with same code

- Operator C (sometimes known as Baby-sitter code), cannot disarm the system **unless** the system was armed with that code. This code is usually assigned to persons who may have the need to arm and disarm the system at specific times only (ex. a baby-sitter needs to control the system only when baby-sitting).

Level 6: Duress

- Sends a silent alarm to a central monitoring station if the user is being forced to disarm (or arm) the system under threat (only useful if the system is connected to a central station).
- When the system's Auxiliary Voltage Triggers are connected to another communication media (Derived Channel/Long Range Radio), note that duress is signaled on the same trigger that signals silent panic (whereas duress has its own unique report when digitally communicated).
- Assigned on a partition by partition basis and can be any code or codes desired.
- Will disarm (or arm) the system, but will also send a silent alarm to the central station (if service is connected). There will be no indication at the keypad that an alarm was sent..

Duress Reporting Note: The Duress report triggering logic activates on the 5th key depression (such as OFF), not the 4th key depression (last digit of code). Duress reports will not be triggered if the 5th key is a [*], such as when performing a GOTO or viewing the capabilities of a user.

General Rules on Authority Levels and Changes

The following rules apply to users when making modifications within the system based on the user code authority levels:

- Master Codes and all lower level codes can be used interchangeably when performing system functions within a partition (a system armed with a user's temporary code can be disarmed with the Master Code or another user's temporary code), except the Operator Level C Code described above.
- A user may not delete or change the user code of the SAME or HIGHER authority than which he is assigned.
- A user (levels 0, 1 & 2 only) may only ADD users to a LOWER authority level.
- A user may assign other users access to only those partitions to which he himself has access.
- A user can only be DELETED or CHANGED from within the partition he is assigned.
- User numbers must be entered as 3-digit entries. Single digit user numbers must, therefore, always be preceded by a "00" (example, 003, 004, 005, etc.). Make sure the end user understands this requirement. Temporary codes are entered as 4-digit numbers.

Ademco Contact ID format is capable of reporting Users 001-150 uniquely. If any other report format is used, only user numbers #1 - #15 can uniquely report to the central station. Users #16 - #150 will report as User #15.

Multiple Partition Access Examples

Each user is programmed for a primary (home) partition. A user can also be given access to operate one or more partitions. In addition, within each partition, each user may be programmed to have different levels of authority. For example, User #3, the V.P. of Engineering, could be assigned to work within the Engineering Department (Partition 1) of ABC Manufacturing. Since he needs the full capabilities in his area, he is assigned as a MASTER with Level 1 authority. This means he may Arm, Disarm, Bypass, Add or Modify users in partition 1.

It is also a requirement that he be able to gain access to the manufacturing area (partition 2) on an emergency basis. You can set this up easily with the partitioned system by now requesting that he also be assigned to partition 2, with a level of authority set lower, such as Level 4 (OPERATOR Level B) which allows him to Arm and Disarm, but nothing else. The control will automatically assign him the same user number within partition 2 and does not require reprogramming of his already existing 4 digit security code.

EXAMPLE OF MULTIPLE PARTITION ACCESS

Part 1	Part 2	Part 3	Part 4	Part 5	Part 6	Part 7	Part 8
User 3	User 3						
Level 1	Level 4						
Master	Oper B						

In the above example, User 3 has MASTER authority in partition 1 and OPERATOR B authority in partition 2. His user number is the same for both partitions. Note that if a user number is already being used in a partition, the system will automatically assign an unused User number. Also notice that no access is allowed for this user into partitions 3 - 8. Attempts to access these partitions would be denied automatically.

To ADD a Master, Manager or Operator Code

During user code entry, normal key depressions at other keypads in a partition will be ignored. However, panic key depression will cause an alarm and terminate user entry.

Enter Installer Code† + [8] + new user # (002-150) + new user's code

†Or Master or Manager code, but must be code with higher level of authority than the code being changed (i.e. Master code can add a Manager or Operator level code, but cannot add another Master code; a Manager code can add an Operator level code, but cannot add a Master or another Manager code).

Keypad will prompt for the Authority Level for this user.

User Number = 003
Enter Auth. Level

Enter the level number as follows:

1 = Master (Arm, Disarm, Bypass, add or modify lower level users)
2 = Manager (Arm, Disarm, Bypass, add or modify lower level users)
3 = Operator Level A (Arm, Disarm, Bypass)
4 = Operator Level B (Arm, Disarm)
5 = Operator Level C (Arm, Disarm only if system armed with this code)
6 = Duress (Arm, Disarm, triggers silent panic alarm)

Keypad will then prompt for Open/Close reporting option

for this user.

Open/Close Rep.? 0 = NO , 1 = YES	Press 0 (NO) or 1 (YES), depending on whether or not arming/disarming by this user will trigger opening & closing reports. This prompt appears only if the installer code is used to add a user.
Access Group? Enter 0-8	If access schedules have been programmed, this prompt appears. Enter the user's access group number (1-8) if this user should have limited access to the system. Enter 0 if no access group should be assigned.
RF Button ? 0=NO , 1=YES	If a 5800 series button transmitter has been enabled for arming/disarming functions, and is not assigned to a user, this prompt will appear. Press 0 (NO) or 1 (YES).
Enter Button ZN # (001-128)	If yes was given as the answer to the RF button question, the zone number for the button will be requested. Enter any one of the zone numbers assigned to the button transmitter as AWAY, STAY or DISARM. The system will then assign **all** buttons of the transmitter to this user number.
Multi-Access ? 0 = NO , 1 = YES	Press 0 (NO) if the user is to have access to this partition only. Press 1 (YES) if the user is to have access to more than one partition. If NO, the programme exits this mode. If yes, the Keypad prompts for the Global Arm option for this user.
Global Arm ? 0 = NO , 1 = YES	Press 0 (NO) or 1 (YES), depending on whether or not this user will be allowed to arm more than one partition via Global Arm prompts (described in the KEYPAD FUNCTIONS section). The keypad now prompts for the user's access to the next partition.
Part. 2 – SHOP ? 0 = NO , 1 = YES	Press 0 (NO) or 1 (YES), depending on whether or not this user will have access to the displayed partition number. If NO, the keypad displays this prompt for the next partition number in sequence. If YES, the keypad prompts for the following: • User's authority level in the displayed partition (see Authority Level prompt above). • Open/Close option for this user in the displayed partition (see Open/Close prompt above). • Global Arm option for this user in the displayed partition. When all partitions have been displayed, the keypad will scroll through all partitions to which access has been assigned, and will display the user number, authority level, open/close and global arm options that were programmed for each partition the user was granted access. For example:
Part. 1 A0✳ WHSE User 003 Auth=3G.	Note that the "G" following the authority level indicates that the global arm feature is enabled for this user in the displayed partition, and that the period at the end of the second line indicates open/close reporting is enabled for this user in the displayed partition. The "✳" indicates the partition from which the user may be changed or deleted.

To CHANGE a Master, Manager or Operator Code

Enter Installer code* + [8] + User number (002-150) + new user's code.
* Or Master or Manager code, but must be code with higher level of authority than the code being changed. (i.e. Master code can change a Manager or Operator level code, but cannot change another Master code; a Manager code can change an Operator level code, but cannot change a Master or another Manager code).

User Number = 003 NEW USER?

The system detects that the user number is already assigned and will prompt if this is a new user. Press 0 (NO). The system will then confirm that the change is allowed based on authorization level.

Adding An RF Key To An Existing User

To add an RF key to an existing user, or to change a user's global arm option, first delete that user's code, then re-add the user code as described in the "Add A User" paragraph.

To Delete a Master, Manager or Operator Code

Enter your code* + [8] + User number (002-150) + your code again
* Installer, Master or Manager code, but must be code with higher level of authority than the code being deleted. (i.e. Master code can delete a Manager or Operator code, but cannot delete another Master code; a Manager code can delete an Operator level code, but cannot delete a Master or another Manager code).

OK TO DELETE 003? 0=NO 1=YES

The system will prompt to confirm that you want to delete this user. Press 0 (NO) or 1 (YES).
If yes, that user's code will be removed from all partitions to which it had been assigned, and all authorization levels and other information about that user will be deleted. Note that a user can only be deleted by a user with a higher authority level. A user cannot delete himself.

A user code can only be deleted from the partition through which it was entered. If trying to delete from another partition, the message "User [XXX] Not Deleted" will be displayed.

To EXIT The User Edit Mode

Press either [✳] or [#], or don't press any key for 10 seconds.

SECTION 27

Keypad Functions

This section provides the following information:

- General information about keypad usage
- Basic keypad functions
- Global arming
- Access control
- Delaying closing time
- Executing the "Go To" command
- Viewing: Built-in user's guide
  A user's capabilities
  Zone descriptors
  Downloaded messages
- Speed keys' macro commands
- Executing #70 Manual Relay Activation mode

General Information

The keypad allows the user to arm and disarm the system, and perform other system functions, such as bypassing zones, viewing messages from the central station, and displaying zone descriptors. Zone and system conditions (alarm, trouble, bypass) are shown in the display window.

When an alarm occurs, keypad sounding and external sounding will occur, and the zone(s) in alarm will be displayed on the keypad. If the alarm display lock feature is enabled (field 1*10), the first zone to go into alarm is displayed. Pressing the [T] key will display other zones in an alarm state. Pressing any key will silence the keypad sounder for 10 seconds. Disarming the system will silence both keypad and external sounders. When the system is disarmed, any zones that were in an alarm condition during the armed period will be displayed (memory of alarm). To clear this display, simply repeat the disarm sequence (enter the security code and press the OFF key).

The keypads also feature chime annunciation, and 3 panic keys (for silent, audible, fire or personal emergency alarms) which can notify the central station of an alarm condition, if that service is connected.

To protect the system against repeated code entry attempts to find a valid user code, code entry of more than 20 key presses within a 15 minute period **without** successful entry of a valid command sequence will result in a 15 minute lockout of all keypad entries within this keypad's partition.

Arming Functions

The following is a brief list of system commands. For detailed information concerning system functions, refer to the User's Manual.

Display Faulted Zones	Before arming, the system must be in the READY condition (all zones must be intact). If the "NOT READY" message appears, press the READY [✳] key to display faulted zones.
Arming Away	Enter code + [2] (AWAY) .
Arming Stay	Enter code + [3] (STAY) . (all zones designated as zone types 4 and 10 will be automatically bypassed)
Arming Instant	Enter code + [7] (INSTANT) (same as STAY without entry delay)
Arming Maximum	Enter code + [4] (MAXIMUM) (same as AWAY without entry delay)
Disarming	Enter code + [1] (OFF) .

Bypassing Zones Enter code + [6] (BYPASS) + zone number. To automatically bypass all faulted zones, use "Quick Bypass" method: Enter code + BYPASS + [#] .

Chime Mode Enter code + [9] (CHIME) . To turn chime mode off, enter code + CHIME again.

Quick Arming: Note that if QUICK ARM is enabled (field *29), the [#] key can be pressed instead of entering the security code, for any arming procedure (Away, Stay, Instant, Maximum, etc.).

User #02 must be programmed into the system in order for the Quick Arm feature to work.

SUMMARY OF ARMING MODES

Mode	Features For Each Arming Mode			
	Exit	Entry	Perimeter	Interior
AWAY	Delay Yes	Delay Yes	Armed Yes	Armed Yes
STAY	Yes	Yes	Yes	No
INSTANT	Yes	No	Yes	No
MAXIMUM	Yes	No	Yes	Yes

Global Arming

If enabled for the user, the keypad will display the following:

```
 ARM ALL    ?
0 = NO , 1 = YES
```

If NO, the keypad prompts for arming each partition individually. If YES, the system attempts to arm all partitions allowed by this user. If there are any faults (open doors, windows, etc.) the keypad will display them. See notes below. These faults must be corrected or the zone bypassed before arming will occur. When faults are corrected, repeat the arming procedure.

1. When using the Global Arm feature, if there are faults in any of the selected partitions, the system will enter a summary mode in which the faulted zones of all of the selected partitions will be displayed. These faults must be corrected or bypassed (code + BYPASS + [#] will attempt to bypass the faults in all of the selected partitions). This summary mode will end in approx. 120 seconds if no keys are pressed.
2. If, when disarming the system using a Global Disarm, any of the selected partitions has a condition which would cause the keypad to beep (such as alarm memory or a trouble condition), the system will cause the keypad to beep and will enter a summary mode in which the alarm memory or trouble conditions of all of the selected partitions will be displayed. This mode will continue until either approx. 120 seconds elapses or a second disarm occurs which clears the beeping.

Global arming cannot be performed from a wireless keypad.

Access Control

If programmed in data field 1*76, one relay may be used for access control in each partition. To activate this relay: User code + [0] .The relay will pulse for 2 seconds.

In addition to this command, there are three other commands (#73, #74, #75) that can control access points shared with the PassPoint Access Control System. Refer to the Access Control section for details on these functions.

Delaying Closing Time

If Open/Close schedules are used, end users can manually delay closing time by extending the closing window by 1 or 2 hours. This is useful if a user must stay on the premises later than usual. The user must have authority level of manager or higher.
To extend the closing window, enter user code + **#** +**82**.

Closing Delay ? Key 0-2 Hours

Enter the number of hours, **1** or **2**, by which the end of the closing window should be extended. **Note:** The delay is from the scheduled closing time, not from the current time. Press [✳] to accept entry and exit this mode. Press **[#]** to exit this mode without changes.

The system will send an "Access Schedule Change" message to the central station when the closing window is extended.

An extension of the closing window cannot be reduced once it is set. However, a 1 hour delay can be increased to 2 hours. This is to prevent the user from deleting the delay after the normal window expires, thereby missing the end of the window.

Partition "GOTO" Commands

Each keypad is assigned a default partition for display purposes, and will show only that partition's information. To see information for another partition or perform system functions in another partition, use the GOTO command (code + [*] +partition number 0-8). The keypad will remain in the new partition until directed to go to another partition, or until 120 seconds has elapsed with no keypad activity. To return to your home partition, enter [✳] + partition **0**.

You must programme data field 2*18 to enable the GOTO function. This is a partition-specific field that must be set for each partition the user wants to access from another partition's keypad.

Viewing Capabilities Of A User

The keypad will display the partitions that a user is authorized for, the user number, and the authority level for all partitions authorized. Enter code + [*] + [*]. The user's capabilities in each authorized partition will typically be displayed as follows:

Part. 1 A0✳ WHSE User 01 Auth.=1G.

The user's Open/Close report capability is shown by the dot following the authority level. If Open/Close is not enabled for a user, the dot will not appear.

Viewing Zone Descriptors

The Alpha Keypads can display all programmed descriptors, which is useful to the installer when checking entries, and can be helpful to the user when there is a need to identify zones. ***To display descriptors, the system must be disarmed and ready to arm.*** Press and hold the READY key until the built-in instructions for that key appear, then release the key. The zone descriptors will appear one at a time, for about 2-3 seconds each. For faster viewing, press the READY key to display the next descriptor in numerical order and so on. When all descriptors have been displayed, the control will exit display mode. To exit display mode before all descriptors have been displayed, enter the security code and press the OFF key.

Viewing Downloaded Messages

Users may occasionally receive a message from their installation company displayed on an alpha keypad. When this occurs, the keypad will display "Message. Press 0 for 5 secs.". Instruct the user to press and hold the 0 key to display the central station's message. Note that the system must be in the READY state to view these messages.

Using The Built-In User's Manual

An abbreviated User's Manual is stored in the system's memory, and can be particularly useful to the end user if the printed User's Manual is not conveniently accessible when the user needs to perform a seldom used and unfamiliar system procedure. The Built-in User's Guide is displayed only on an alpha keypad by simply pressing any of the function keys (e.g., OFF, AWAY, STAY, MAXIMUM, BYPASS, INSTANT, CODE, TEST, READY, #, and CHIME) for approximately 5 seconds and then releasing it. Abbreviated instructions relative to the key that has been pressed will then be displayed (2 lines of text are displayed at a time). This function works in either armed or disarmed state.

Panic Keys

There are three panic key pairs (shown below) or three lettered keys (A, B, or C) that, if programmed, can be used to manually initiate alarms and send a report to the central station. Each key pair can be individually programmed for 24 Hour Silent, Audible or Auxiliary (Emergency) responses, as well as Fire. The panic function is activated when the appropriate key pair is pressed at the same time.

The panic functions are identified by the system as follows:

PANIC	Displayed as Zone
[✳] [1]	995
[#] [3]	996
[✳] [#]	999

For alpha keypads, these panic keys can also be programmed with an alpha descriptor.

For the Silent panic function to be of practical value, the system must be connected to a central station.

Speed Keys [A, B, C and/or D] (Macros)

The A, B, C and/or D keys can be used to activate strings of up to 32 keystrokes. These keystrokes are known as a macro and are stored in the system's memory. Each partition may have its own macros. Typical Speed Key functions include:

- Arming sequences that involve first bypassing certain zones before arming.
- Seldom used but repeatable sequences.
- Relay activation sequences.

To programme a macro, enter your user code + [#] + [X], where X can be A, B, C or D. The following appears:

ENTER SPEEDKEY "D"
existing sequence displayed

Enter up to 32 keystrokes. A speed key sequence can include different commands. Press the lettered key to separate different commands. For example, you may want to perform the following:

Desired function	Keystrokes
GOTO partition 2	Enter *2
Bypass zones 010 & 011	Press bypass [6], then the zone numbers 10 & 11
Arm in maximum mode	Press maximum [4] key
Return to partition 1	Enter *1

To programme that speed key sequence, type the following :

*2[D] 6100011[D] 4[D] *1[D][D]

Note that the "D" key is pressed after the "2," the last "1" and the "4," separating the different commands. Press "D" twice to complete the entry and exit.

To execute a speed key sequence, press the appropriate lettered key:

ENTER USER CODE
✳✳✳✳

Enter your user code. The programmed speedkey sequence will begin automatically.

When defining speedkey sequences, do not use the [#] key to represent Quick Arming. The system uses the entered code in response to the prompt to initiate commands in a speedkey sequence, so the quick arm key is unnecessary. The system interprets the use of the [#] key in a speedkey sequence as its designated function only (e.g. #2 is not interpreted as arm in away mode, but rather as enter house ID sniffer mode).

Manual Relay Activation Mode (#70 Mode)

The system allows users to manually activate relays/X-10 modules by keypad command using either the keypad or a telephone keypad (if VIP module is used). The user will be prompted (by keypad alpha display or telephone voice module).

To activate relays from a keypad, enter 4-digit security code + [**#**] +**70.**
To activate relays using a telephone and telephone module, first dial the 2-digit phone access code. When the system acknowledges the access, enter 4-digit security code + [**#**] + **70**. The following prompts/voice responses will begin.

ENTER DEVICE NO. 00=QUIT 01	**Voice:** "ENTER DEVICE CODE NOW" Enter the 2-digit number of the relay/X-10 module to be activated.
nn DEVICE IS OFF Key 0=OFF , 1=ON	**Voice:** "*voice descriptor* DEVICE nn ON/OFF. FOR *voice descriptor* ON ENTER 1, FOR *voice descriptor* OFF ENTER 0" Press **0** or **1** to turn the device off or on respectively. "nn" represents the 2-digit relay/X-10 module number and *voice descriptor* is the relay voice descriptor programmed by the installer.
nn DEVICE IS OFF Key THE "*" KEY	**Voice:** "*voice descriptor* DEVICE nn ON/OFF. TO EXIT ENTER 00 NOW" From a keypad, press [✳] to continue. The ENTER DEVICE NO. prompt will appear. From a telephone keypad, enter **00** to exit, or enter the next relay number to be programmed. The current on/off state of that relay will be annunciated. Alternatively, if 6 seconds elapses with no key depression, the telephone module will annunciate the "ENTER DEVICE CODE NOW" message.

SECTION 28

Testing The System

This section provides the following information:

- An explanation of the following test modes:
  --Battery test
  --Dialler test
  --Burglary Walk test
  --Armed Burglary System test
- Turning the system over to the user

Battery Test

When AC power is present, the VISTA-120 will run a brief (13 seconds) battery test every 4 minutes (alternatively, the test can be for 1.5 seconds every 50 seconds) to determine if there is a battery connected, and will run an extended battery test every 24 hours to check on the battery's condition. This presence test will also be conducted whenever the system or a partition is disarmed. If the VISTA-120 finds that the battery voltage is low (less than approx. 11.5V [10.8VDC in Vista-120FR]) during one of these tests, it initiates a keypad "System LoBat" display and a rapid keypad beeping sound. It also sends a low battery report to the central station (if the dialler feature is used). The keypad can be cleared by entering any security code + OFF, and a restore report will be sent to the central station after a subsequent test indicates that the problem (disconnected or low battery) has been corrected.

Dialler Test

The VISTA-120 may be programmed to automatically transmit test reports to a central station at intervals ranging from once per hour to once per 999 hours (field *27). The VISTA-120 can be programmed to send the first report at any time of the day, or at any day of the week after power up (field *83).

LCD Display Test

Whenever the Test Mode is entered from a keypad, all LEDs and LCD dots (that make up characters) are activated for 2-3 seconds.

Burglary Walk Test (code + TEST [5])

This test causes the system to sound keypad beeps in response to faults on burglary and non-fire related 24 hour zones for the purpose of allowing proper zone operation to be checked without triggering alarms. Note that the system will not trigger alarms for burglary and non-fire related 24 hour zones but will trigger fire alarms while this test is active. This test can only be activated by the installer, a master user or manager user by entering the corresponding security code and pressing TEST while the burglary portion of the system is disarmed. UL requires that this test be conducted on a weekly basis.

When this test is first activated, the system will sound burglary bells/sirens for 3 seconds. The system will send a start of walk test message to the central station. The keypads will display “Burg Walk Test in Progress” and will sound a single beep every 15 seconds while the test remains active.

Open and close each protected door and window in turn. Each action should produce 3 beeps from the keypad. Walk in front of any motion detectors. Listen for three beeps when the detector senses movement. The keypad will display the zone number and alpha descriptor while a door or window remains open or while a detector remains activated. The system automatically issues a zone 8 glass break detector power reset about 10 seconds after it finds a fault on this zone, to allow faulted detectors to be reset. To end this test, enter any security code and press OFF. An end-of-walk test message will be sent to the central station.

Armed Burglary System Test

1. Alarm messages will be sent to the central station during the following tests. Notify the central station that a test will be in progress.
2. A display of "COMM. FAILURE" indicates a failure to communicate (no Kissoff by the receiver at the central station after the maximum number of transmission attempts is tried). If this occurs, verify that the phone line is connected, the correct report format is programmed, etc.

1. Arm the system and fault one or more zones. Silence alarm sounder(s) each time by entering the code and pressing OFF. Check that Entry/Exit delay zones provide the assigned delay times.
2. Check the keypad-initiated alarms, if programmed, by pressing the Panic keys (* and #, 1 and *, and/or 3 and #). If the system has been programmed for audible emergency, the keypad will emit a loud, steady alarm sound. The word ALARM and a descriptor "999" will be displayed for * and #. (if 1 and * are pressed, a "995" will be displayed; if 3 and # are pressed, a "996" will be displayed). Silence the alarm by entering the security code and pressing OFF. If the system has been programmed for silent panic, there will be no audible alarms or displays. A report will be sent to the central station, however.
2. Notify the central station that all tests are finished and verify results with them.

Trouble Conditions

Check or Trouble Messages

- A display of "CHECK" or "TRBL" (as per field 1*07) accompanied by a zone number (001-128) and an alpha descriptor descriptor indicates that a problem exists with that zone. Zone trouble may be caused by one of the following conditions:
  --A wired fire zone is open (broken wire)
  --A Day/Night (tamper) zone (Zone Type 5) is faulted
  --A polling loop zone is not seen by the control panel
  --A polling loop device has been tampered with (cover removed)
  --A wireless zone has not checked in during the time set in field 1*31
  --A 5800 series transmitter has been tampered with (cover removed)
- "CHECK" accompanied by a numeric display of "6XX," where XX = 01-32, indicates a trouble on a 4204CF supervised bell output (corresponding relay number 01-32)
- "CHECK" accompanied by a numeric display of "8XX," where XX = 00-31, indicates a trouble on a peripheral device (connected to the panel's keypad terminals) of the corresponding device address (00-31)
- "CHECK" accompanied by a numeric display of "9XX," where XX = 00-99, indicates that a system trouble exists. See the Zone Index section.

If the problem has been corrected, key an OFF sequence (Security Code plus OFF) twice to clear the display.

Other System Messages

- "COMM. FAILURE" at the keypad
  Indicates that a failure occurred in the telephone communication portion of your system.
- "LO BAT" and a zone descriptor, accompanied by a once per minute beep at the Keypad
  Indicates that a low battery condition exists in the wireless transmitter displayed. The audible warning sound may be silenced by pressing any key.
- "SYSTEM LO BAT"
  Indicates that a low battery condition exists with the system's backup battery.
- "RCVR SET UP ERROR" at the keypad
  Indicates that the system has more wireless zones programmed than the wireless receiver can support. If this is not corrected, none of the zones in the system will be protected. If additional wireless zones are desired, use an appropriate receiver.
- "MODEM COMM"
  Indicates that the control is on-line with a remote computer.
- "HSENS" and zone number
  Indicates a smoke detector with a high sensitivity level, which may cause false alarms. The detector is probably dirty and should be cleaned or replaced.
- "LSENS" and zone number
  Indicates a smoke detector with a low sensitivity level. Detectors with a low sensitivity might not detect a smoke condition. The detector should be cleaned or replaced.

Power Failure

If the POWER indicator is off, and the message "AC LOSS" is displayed, the keypad is operating on battery power only. Check to see that the circuit breaker for the branch circuit that your system's transformer is wired to has not been accidentally turned off. Instruct the user to call a service representative immediately if AC power cannot be restored.

Turning the System Over to the User

1. Fully explain the operation of the system to the user by going over each of its functions as well as the User's Manual supplied.
2. In particular, explain the operation of each zone (entry/exit, perimeter, interior, fire, etc.). Be sure the user understands how to operate any emergency feature(s) programmed into the system.

To The Installer

Regular maintenance and inspection (at least annually) by the installer and frequent testing by the user are vital to continuous satisfactory operation of any alarm system.

The installer should assume the responsibility of developing and offering a regular maintenance programme to the user as well as acquainting the user with the proper operation and limitations of the alarm system and its component parts. Recommendations must be included for a specific programme of frequent testing (at least weekly) to insure the system's proper operation at all times.

REGULATORY AGENCY STATEMENTS

IN THE EVENT OF TELEPHONE OPERATIONAL PROBLEMS

In the event of telephone operational problems, disconnect the control panel by removing the plug from the RJ31X wall jack. We recommend that you demonstrate disconnecting the phones on installation of the system. Do not disconnect the phone connection inside the Control Panel. Doing so will result in the loss of your phone lines. If the regular phone works correctly after the Control Panel has been disconnected from the phone lines, the Control Panel has a problem and should be returned for repair. If upon disconnection of the Control Panel, there is still a problem on the line, notify the telephone company that they have a problem and request prompt repair service. The user may not under any circumstances (in or out of warranty) attempt any service or repairs to the system. It must be returned to the factory or an authorized service agency for all repairs.

DIP SWITCH TABLES FOR ADDRESSABLE POLLING LOOP DEVICES

4190WH ZONE EXPANDER

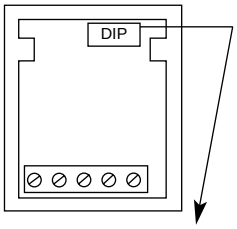

APPLIES TO TABLE A & B
SHOWN SET FOR ID 10 (A)

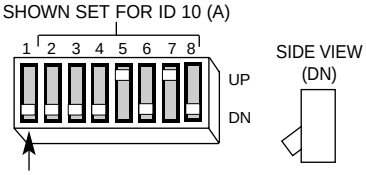

WITH TABLE:	A	B
POS.1 MUST BE:	DN	UP

THIS TABLE FOR DIPS WITH WORD "OFF" **A**

DEVICE ID	DIP SWITCH POSITION						
	2	3	4	5	6	7	8
10	–	–	–	UP	–	UP	–
11	–	–	–	UP	–	UP	UP
12	–	–	–	UP	UP	–	–
13	–	–	–	UP	UP	–	UP
14	–	–	–	UP	UP	UP	–
15	–	–	–	UP	UP	UP	UP
16	–	–	UP	–	–	–	–
17	–	–	UP	–	–	–	UP
18	–	–	UP	–	–	UP	–
19	–	–	UP	–	–	UP	UP
20	–	–	UP	–	UP	–	–
21	–	–	UP	–	UP	–	UP
22	–	–	UP	–	UP	UP	–
23	–	–	UP	–	UP	UP	UP
24	–	–	UP	UP	–	–	–
25	–	–	UP	UP	–	–	UP
26	–	–	UP	UP	–	UP	–
27	–	–	UP	UP	–	UP	UP
28	–	–	UP	UP	UP	–	–
29	–	–	UP	UP	UP	–	UP
30	–	–	UP	UP	UP	UP	–
31	–	–	UP	UP	UP	UP	UP
32	–	UP	–	–	–	–	–
33	–	UP	–	–	–	–	UP
34	–	UP	–	–	–	UP	–
35	–	UP	–	–	–	UP	UP
36	–	UP	–	–	UP	–	–
37	–	UP	–	–	UP	–	UP
38	–	UP	–	–	UP	UP	–
39	–	UP	–	–	UP	UP	UP
40	–	UP	–	UP	–	–	–
41	–	UP	–	UP	–	–	UP
42	–	UP	–	UP	–	UP	–
43	–	UP	–	UP	–	UP	UP
44	–	UP	–	UP	UP	–	–
45	–	UP	–	UP	UP	–	UP
46	–	UP	–	UP	UP	UP	–
47	–	UP	–	UP	UP	UP	UP
48	–	UP	UP	–	–	–	–
49	–	UP	UP	–	–	–	UP
50	–	UP	UP	–	–	UP	–
51	–	UP	UP	–	–	UP	UP
52	–	UP	UP	–	UP	–	–
53	–	UP	UP	–	UP	–	UP
54	–	UP	UP	–	UP	UP	–
55	–	UP	UP	–	UP	UP	UP
56	–	UP	UP	UP	–	–	–
57	–	UP	UP	UP	–	–	UP
58	–	UP	UP	UP	–	UP	–
59	–	UP	UP	UP	–	UP	UP
60	–	UP	UP	UP	UP	–	–
61	–	UP	UP	UP	UP	–	UP
62	–	UP	UP	UP	UP	UP	–
63	–	UP	UP	UP	UP	UP	UP
64	UP	–	–	–	–	–	–
65	UP	–	–	–	–	–	UP
66	UP	–	–	–	–	UP	–
67	UP	–	–	–	–	UP	UP
68	UP	–	–	–	UP	–	–
69	UP	–	–	–	UP	–	UP
70	UP	–	–	–	UP	UP	–
71	UP	–	–	–	UP	UP	UP
72	UP	–	–	UP	–	–	–
73	UP	–	–	UP	–	–	UP
74	UP	–	–	UP	–	UP	–
75	UP	–	–	UP	–	UP	UP
76	UP	–	–	UP	UP	–	–
77	UP	–	–	UP	UP	–	UP
78	UP	–	–	UP	UP	UP	–
79	UP	–	–	UP	UP	UP	UP
80	UP	–	UP	–	–	–	–
81	UP	–	UP	–	–	–	UP
82	UP	–	UP	–	–	UP	–
83	UP	–	UP	–	–	UP	UP
84	UP	–	UP	–	UP	–	–
85	UP	–	UP	–	UP	–	UP
86	UP	–	UP	–	UP	UP	–
87	UP	–	UP	–	UP	UP	UP
88	UP	–	UP	UP	–	–	–
89	UP	–	UP	UP	–	–	UP
BIT VALUE:	**64**	**32**	**16**	**8**	**4**	**2**	**1**

THIS TABLE FOR DIPS WITH WORD "ON" **B**

DEVICE ID	DIP SWITCH POSITION						
	2	3	4	5	6	7	8
10	UP	UP	UP	–	UP	–	UP
11	UP	UP	UP	–	UP	–	–
12	UP	UP	UP	–	–	UP	UP
13	UP	UP	UP	–	–	UP	–
14	UP	UP	UP	–	–	–	UP
15	UP	UP	UP	–	–	–	–
16	UP	UP	–	UP	UP	UP	UP
17	UP	UP	–	UP	UP	UP	–
18	UP	UP	–	UP	UP	–	UP
19	UP	UP	–	UP	UP	–	–
20	UP	UP	–	UP	–	UP	UP
21	UP	UP	–	UP	–	UP	–
22	UP	UP	–	UP	–	–	UP
23	UP	UP	–	UP	–	–	–
24	UP	UP	–	–	UP	UP	UP
25	UP	UP	–	–	UP	UP	–
26	UP	UP	–	–	UP	–	UP
27	UP	UP	–	–	UP	–	–
28	UP	UP	–	–	–	UP	UP
29	UP	UP	–	–	–	UP	–
30	UP	UP	–	–	–	–	UP
31	UP	UP	–	–	–	–	–
32	UP	–	UP	UP	UP	UP	UP
33	UP	–	UP	UP	UP	UP	–
34	UP	–	UP	UP	UP	–	UP
35	UP	–	UP	UP	UP	–	–
36	UP	–	UP	UP	–	UP	UP
37	UP	–	UP	UP	–	UP	–
38	UP	–	UP	UP	–	–	UP
39	UP	–	UP	UP	–	–	–
40	UP	–	UP	–	UP	UP	UP
41	UP	–	UP	–	UP	UP	–
42	UP	–	UP	–	UP	–	UP
43	UP	–	UP	–	UP	–	–
44	UP	–	UP	–	–	UP	UP
45	UP	–	UP	–	–	UP	–
46	UP	–	UP	–	–	–	UP
47	UP	–	UP	–	–	–	–
48	UP	–	–	UP	UP	UP	UP
49	UP	–	–	UP	UP	UP	–
50	UP	–	–	UP	UP	–	UP
51	UP	–	–	UP	UP	–	–
52	UP	–	–	UP	–	UP	UP
53	UP	–	–	UP	–	UP	–
54	UP	–	–	UP	–	–	UP
55	UP	–	–	UP	–	–	–
56	UP	–	–	–	UP	UP	UP
57	UP	–	–	–	UP	UP	–
58	UP	–	–	–	UP	–	UP
59	UP	–	–	–	UP	–	–
60	UP	–	–	–	–	UP	UP
61	UP	–	–	–	–	UP	–
62	UP	–	–	–	–	–	UP
63	UP	–	–	–	–	–	–
64	–	UP	UP	UP	UP	UP	UP
65	–	UP	UP	UP	UP	UP	–
66	–	UP	UP	UP	UP	–	UP
67	–	UP	UP	UP	UP	–	–
68	–	UP	UP	UP	–	UP	UP
69	–	UP	UP	UP	–	UP	–
70	–	UP	UP	UP	–	–	UP
71	–	UP	UP	UP	–	–	–
72	–	UP	UP	–	UP	UP	UP
73	–	UP	UP	–	UP	UP	–
74	–	UP	UP	–	UP	–	UP
75	–	UP	UP	–	UP	–	–
76	–	UP	UP	–	–	UP	UP
77	–	UP	UP	–	–	UP	–
78	–	UP	UP	–	–	–	UP
79	–	UP	UP	–	–	–	–
80	–	UP	–	UP	UP	UP	UP
81	–	UP	–	UP	UP	UP	–
82	–	UP	–	UP	UP	–	UP
83	–	UP	–	UP	UP	–	–
84	–	UP	–	UP	–	UP	UP
85	–	UP	–	UP	–	UP	–
86	–	UP	–	UP	–	–	UP
87	–	UP	–	UP	–	–	–
88	–	UP	–	–	UP	UP	UP
89	–	UP	–	–	UP	UP	–
BIT VALUE:	**64**	**32**	**16**	**8**	**4**	**2**	**1**

DIP SWITCH TABLES FOR POLLING LOOP DEVICES

4275EX PIR

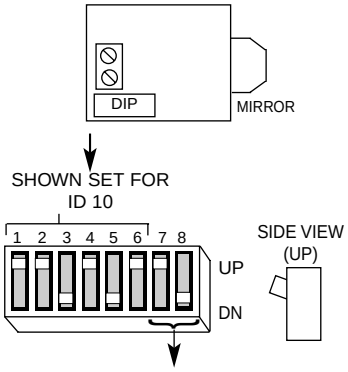

POS 7: DN = INSTANT MODE
UP = PULSE COUNT
POS. 8: DN = WALK TEST
UP = W/T DISABLE

DEVICE ID	DIP SWITCH POSITION					
	1	2	3	4	5	6
10	UP	UP	—	UP	—	UP
11	UP	UP	—	UP	—	—
12	UP	UP	—	—	UP	UP
13	UP	UP	—	—	UP	—
14	UP	UP	—	—	—	UP
15	UP	UP	—	—	—	—
16	UP	—	UP	UP	UP	UP
17	UP	—	UP	UP	UP	—
18	UP	—	UP	UP	—	UP
19	UP	—	UP	UP	—	—
20	UP	—	UP	—	UP	UP
21	UP	—	UP	—	UP	—
22	UP	—	UP	—	—	UP
23	UP	—	UP	—	—	—
24	UP	—	—	UP	UP	UP
25	UP	—	—	UP	UP	—
26	UP	—	—	UP	—	UP
27	UP	—	—	UP	—	—
28	UP	—	—	—	UP	UP
29	UP	—	—	—	UP	—
30	UP	—	—	—	—	UP
31	UP	—	—	—	—	—
32	—	UP	UP	UP	UP	UP
33	—	UP	UP	UP	UP	—
34	—	UP	UP	UP	—	UP
35	—	UP	UP	UP	—	—
36	—	UP	UP	—	UP	UP
37	—	UP	UP	—	UP	—
38	—	UP	UP	—	—	UP
39	—	UP	UP	—	—	—
40	—	UP	—	UP	UP	UP
41	—	UP	—	UP	UP	—
42	—	UP	—	UP	—	UP
43	—	UP	—	UP	—	—
44	—	UP	—	—	UP	UP
45	—	UP	—	—	UP	—
46	—	UP	—	—	—	UP
47	—	UP	—	—	—	—
48	—	—	UP	UP	UP	UP
49	—	—	UP	UP	UP	—
50	—	—	UP	UP	—	UP
51	—	—	UP	UP	—	—
52	—	—	UP	—	UP	UP
53	—	—	UP	—	UP	—
54	—	—	UP	—	—	UP
55	—	—	UP	—	—	—
56	—	—	—	UP	UP	UP
57	—	—	—	UP	UP	—
58	—	—	—	UP	—	UP
59	—	—	—	UP	—	—
60	—	—	—	—	UP	UP
61	—	—	—	—	UP	—
62	—	—	—	—	—	UP
63	—	—	—	—	—	—
BIT VALUE:	32	16	8	4	2	1

4278EX PIR

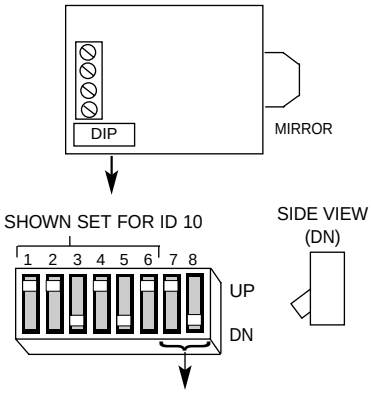

POS 7: UP = NORMAL MODE
DN = INSTANT MODE
POS. 8: UP = W/T DISABLE
DN = WALK TEST

DEVICE ID	DIP SWITCH POSITION					
	1	2	3	4	5	6
10	UP	UP	—	UP	—	UP
11	UP	UP	—	UP	—	—
12	UP	UP	—	—	UP	UP
13	UP	UP	—	—	UP	—
14	UP	UP	—	—	—	UP
15	UP	UP	—	—	—	—
16	UP	—	UP	UP	UP	UP
17	UP	—	UP	UP	UP	—
18	UP	—	UP	UP	—	UP
19	UP	—	UP	UP	—	—
20	UP	—	UP	—	UP	UP
21	UP	—	UP	—	UP	—
22	UP	—	UP	—	—	UP
23	UP	—	UP	—	—	—
24	UP	—	—	UP	UP	UP
25	UP	—	—	UP	UP	—
26	UP	—	—	UP	—	UP
27	UP	—	—	UP	—	—
28	UP	—	—	—	UP	UP
29	UP	—	—	—	UP	—
30	UP	—	—	—	—	UP
31	UP	—	—	—	—	—
32	—	UP	UP	UP	UP	UP
33	—	UP	UP	UP	UP	—
34	—	UP	UP	UP	—	UP
35	—	UP	UP	UP	—	—
36	—	UP	UP	—	UP	UP
37	—	UP	UP	—	UP	—
38	—	UP	UP	—	—	UP
39	—	UP	UP	—	—	—
40	—	UP	—	UP	UP	UP
41	—	UP	—	UP	UP	—
42	—	UP	—	UP	—	UP
43	—	UP	—	UP	—	—
44	—	UP	—	—	UP	UP
45	—	UP	—	—	UP	—
46	—	UP	—	—	—	UP
47	—	UP	—	—	—	—
48	—	—	UP	UP	UP	UP
49	—	—	UP	UP	UP	—
50	—	—	UP	UP	—	UP
51	—	—	UP	UP	—	—
52	—	—	UP	—	UP	UP
53	—	—	UP	—	UP	—
54	—	—	UP	—	—	UP
55	—	—	UP	—	—	—
56	—	—	—	UP	UP	UP
57	—	—	—	UP	UP	—
58	—	—	—	UP	—	UP
59	—	—	—	UP	—	—
60	—	—	—	—	UP	UP
61	—	—	—	—	UP	—
62	—	—	—	—	—	UP
63	—	—	—	—	—	—
BIT VALUE:	32	16	8	4	2	1

4194 REED CONTACT (SURFACE MOUNT)

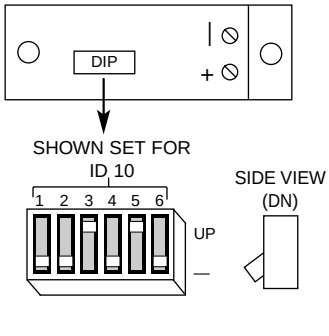

DEVICE ID	DIP SWITCH POSITION					
	1	2	3	4	5	6
10	—	—	UP	—	UP	—
11	—	—	UP	—	UP	UP
12	—	—	UP	UP	—	—
13	—	—	UP	UP	—	UP
14	—	—	UP	UP	UP	—
15	—	—	UP	UP	UP	UP
16	—	Up	—	—	—	—
17	—	UP	—	—	—	UP
18	—	UP	—	—	UP	—
19	—	UP	—	—	UP	UP
20	—	UP	—	UP	—	—
21	—	UP	—	UP	—	UP
22	—	UP	—	UP	UP	—
23	—	UP	—	UP	UP	UP
24	—	UP	UP	—	—	—
25	—	UP	UP	—	—	UP
26	—	UP	UP	—	UP	—
27	—	UP	UP	—	UP	UP
28	—	UP	UP	UP	—	—
29	—	UP	UP	UP	—	UP
30	—	UP	UP	UP	UP	—
31	—	UP	UP	UP	UP	UP
32	UP	—	—	—	—	—
33	UP	—	—	—	—	UP
34	UP	—	—	—	UP	—
35	UP	—	—	—	UP	UP
36	UP	—	—	UP	—	—
37	UP	—	—	UP	—	UP
38	UP	—	—	UP	UP	—
39	UP	—	—	UP	UP	UP
40	UP	—	UP	—	—	—
41	UP	—	UP	—	—	UP
42	UP	—	UP	—	UP	—
43	UP	—	UP	—	UP	UP
44	UP	—	UP	UP	—	—
45	UP	—	UP	UP	—	UP
46	UP	—	UP	UP	UP	—
47	UP	—	UP	UP	UP	UP
48	UP	UP	—	—	—	—
49	UP	UP	—	—	—	UP
50	UP	UP	—	—	UP	—
51	Up	UP	—	—	UP	UP
52	UP	UP	—	UP	—	—
53	UP	UP	—	UP	—	UP
54	UP	UP	—	UP	UP	—
55	UP	UP	—	UP	UP	UP
56	UP	UP	UP	—	—	—
57	UP	UP	UP	—	—	UP
58	UP	UP	UP	—	UP	—
59	UP	UP	UP	—	UP	UP
60	UP	UP	UP	UP	—	—
61	UP	UP	UP	UP	—	UP
62	UP	UP	UP	UP	UP	—
63	UP	UP	UP	UP	UP	UP
BIT VALUE:	32	16	8	4	2	1

DIP SWITCH TABLES FOR 5700 RF SYSTEM WIRELESS DEVICES

HOUSE ID SWITCH SETTING FOR ALL DEVICES EXCEPT 5716

DEVICE ID	DIP SWITCH POSITION 1	2	3	4	5
1	UP	UP	UP	UP	—
2	UP	UP	UP	—	UP
3	UP	UP	UP	—	—
4	UP	UP	—	UP	UP
5	UP	UP	—	UP	—
6	UP	UP	—	—	UP
7	UP	UP	—	—	—
8	UP	—	UP	UP	UP
9	UP	—	UP	UP	—
10	UP	—	UP	—	UP
11	UP	—	UP	—	—
12	UP	—	—	UP	UP
13	UP	—	—	UP	—
14	UP	—	—	—	UP
15	UP	—	—	—	—
16	—	UP	UP	UP	UP
17	—	UP	UP	UP	—
18	—	UP	UP	—	UP
19	—	UP	UP	—	—
20	—	UP	—	UP	UP
21	—	UP	—	UP	—
22	—	UP	—	—	UP
23	—	UP	—	—	—
24	—	—	UP	UP	UP
25	—	—	UP	UP	—
26	—	—	UP	—	UP
27	—	—	UP	—	—
28	—	—	—	UP	UP
29	—	—	—	UP	—
30	—	—	—	—	UP
31	—	—	—	—	—
BIT VALUE:	16	8	4	2	1

5701 PANIC TRANSMITTER

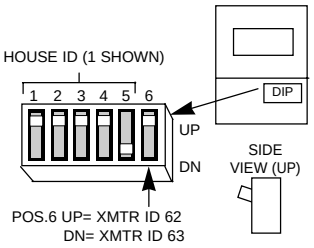

5727 KEYPAD

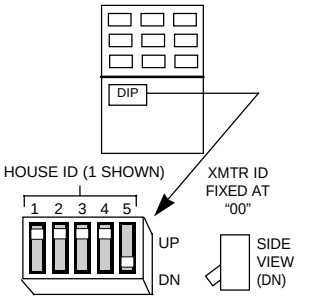

5706/5707 SMOKE DETECTORTRANSMITTER

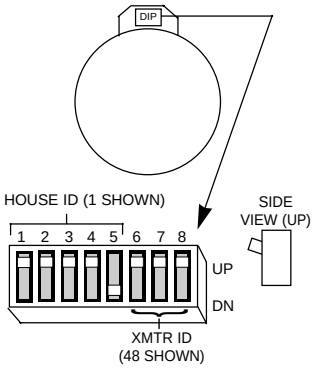

XMTR ID	DIP SWITCH POSITION 6	7	8
48	UP	UP	UP
49	UP	UP	—
50	UP	—	UP
51	UP	—	—
52	—	UP	UP
53	—	UP	—
54	—	—	UP
55	—	—	—

5775 PIR DETECTOR/TRANSMITTER

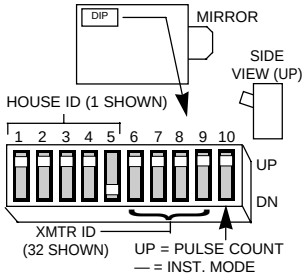

XMTR ID	DIP SWITCH POSITION 6	7	8	9
32	UP	UP	UP	UP
33	UP	UP	UP	—
34	UP	UP	—	UP
35	UP	UP	—	—
36	UP	—	UP	UP
37	UP	—	UP	—
38	UP	—	—	UP
39	UP	—	—	—
40	—	UP	UP	UP
41	—	UP	UP	—
42	—	UP	—	UP
43	—	UP	—	—
44	—	—	UP	UP
45	—	—	UP	—
46	—	—	—	UP
47	—	—	—	—

5715 UNIVERSAL TRANSMITTER

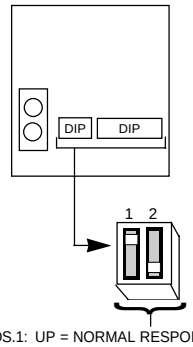

POS.1: UP = NORMAL RESPONSE
DN = FAST RESPONSE
POS. 2: UP = NO COVER TAMPER
DN = COVER TAMPER (use N.C. setting)

5711/5711WM DOOR/WINDOW TRANSMITTER

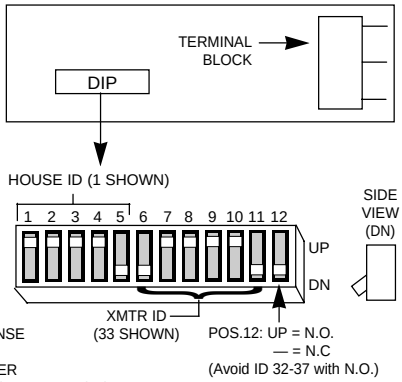

XMTR ID	DIP SWITCH POSITION 6	7	8	9	10	11
1	UP	UP	UP	UP	UP	—
2	UP	UP	UP	UP	—	UP
3	UP	UP	UP	UP	—	—
4	UP	UP	UP	—	UP	UP
5	UP	UP	UP	—	UP	—
6	UP	UP	UP	—	—	UP
7	UP	UP	UP	—	—	—
8	UP	UP	—	UP	UP	UP
9	UP	UP	—	UP	UP	—
10	UP	UP	—	UP	—	UP
11	UP	UP	—	UP	—	—
12	UP	UP	—	—	UP	UP
13	UP	UP	—	—	UP	—
14	UP	UP	—	—	—	UP
15	UP	UP	—	—	—	—
16	UP	—	UP	UP	UP	UP
17	UP	—	UP	UP	UP	—
18	UP	—	UP	UP	—	UP
19	UP	—	UP	UP	—	—
20	UP	—	UP	—	UP	UP
21	UP	—	UP	—	UP	—
22	UP	—	UP	—	—	UP
23	UP	—	UP	—	—	—
24	UP	—	—	UP	UP	UP
25	UP	—	—	UP	UP	—
26	UP	—	—	UP	—	UP
27	UP	—	—	UP	—	—
28	UP	—	—	—	UP	UP
29	UP	—	—	—	UP	—
30	UP	—	—	—	—	UP
31	UP	—	—	—	—	—
32	—	UP	UP	UP	UP	UP
BIT VALUE:	32	16	8	4	2	1

XMTR ID	DIP SWITCH POSITION 6	7	8	9	10	11
33	—	UP	UP	UP	UP	—
34	—	UP	UP	UP	—	UP
35	—	UP	UP	UP	—	—
36	—	UP	UP	—	UP	UP
37	—	UP	UP	—	UP	—
38	—	UP	UP	—	—	UP
39	—	UP	UP	—	—	—
40	—	UP	—	UP	UP	UP
41	—	UP	—	UP	UP	—
42	—	UP	—	UP	—	UP
43	—	UP	—	UP	—	—
44	—	UP	—	—	UP	UP
45	—	UP	—	—	UP	—
46	—	UP	—	—	—	UP
47	—	UP	—	—	—	—
48	—	—	UP	UP	UP	UP
49	—	—	U	UP	UP	—
50	—	—	UP	UP	—	UP
51	—	—	UP	UP	—	—
52	—	—	UP	—	UP	UP
53	—	—	UP	—	UP	—
54	—	—	UP	—	—	UP
55	—	—	UP	—	—	—
56	—	—	—	UP	UP	UP
57	—	—	—	UP	UP	—
58	—	—	—	UP	—	UP
59	—	—	—	UP	—	—
60	—	—	—	—	UP	UP
61	—	—	—	—	UP	—
62	—	—	—	—	—	UP
63	—	—	—	—	—	—
BIT VALUE	32	16	8	4	2	1

5716 DOOR/WINDOW TRANSMITTER

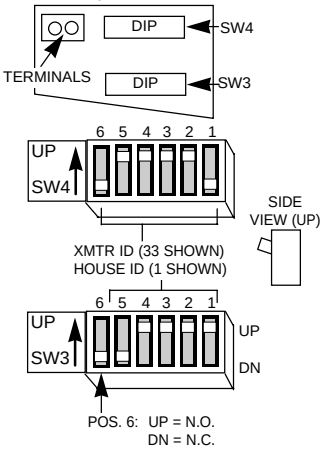

HOUSE ID	DIP SWITCH POSITION 5	4	3	2	1
1	—	UP	UP	UP	UP
2	UP	—	UP	UP	UP
3	—	—	UP	UP	UP
4	UP	UP	—	UP	UP
5	—	UP	—	UP	UP
6	UP	—	—	UP	UP
7	—	—	—	UP	UP
8	UP	UP	UP	—	UP
9	—	UP	UP	—	UP
10	UP	—	UP	—	UP
11	—	—	UP	—	UP
12	UP	UP	—	—	UP
13	—	UP	—	—	UP
14	UP	—	—	—	UP
15	—	—	—	—	UP
16	UP	UP	UP	UP	—
17	—	UP	UP	UP	—
18	UP	—	UP	UP	—
19	—	—	UP	UP	—
20	UP	UP	—	UP	—
21	—	UP	—	UP	—
22	UP	—	—	UP	—
23	—	—	—	UP	—
24	UP	UP	UP	—	—
25	——	UP	UP	—	—
26	UP	—	UP	—	—
27	—	—	UP	—	—
28	UP	UP	—	—	—
29	—	UP	—	—	—
30	UP	—	—	—	—
31	—	—	—	—	—
BIT VALUE:	1	2	4	8	16

TRANSMITTER ID	DIP SWITCH POSITION 6	5	4	3	2	1
1	—	UP	UP	UP	UP	UP
2	UP	—	UP	UP	UP	UP
3	—	—	UP	UP	UP	UP
4	UP	UP	—	UP	UP	UP
5	—	UP	—	UP	UP	UP
6	UP	—	—	UP	UP	UP
7	—	—	—	UP	UP	UP
8	UP	UP	UP	—	UP	UP
9	—	UP	UP	—	UP	UP
10	UP	—	UP	—	UP	UP
11	—	—	UP	—	UP	UP
12	UP	UP	—	—	UP	UP
13	—	UP	—	—	UP	UP
14	UP	—	—	—	UP	UP
15	—	—	—	—	UP	UP
16	UP	UP	UP	UP	—	UP
17	—	UP	UP	UP	—	UP
18	UP	—	UP	UP	—	UP
19	—	—	UP	UP	—	UP
20	UP	UP	—	UP	—	UP
21	—	UP	—	UP	—	UP
22	UP	—	—	UP	—	UP
23	—	—	—	UP	—	UP
24	UP	UP	UP	—	—	UP
25	—	UP	UP	—	—	UP
26	UP	—	UP	—	—	UP
27	—	—	UP	—	—	UP
28	UP	UP	—	—	—	UP
29	—	UP	—	—	—	UP
30	UP	—	—	—	—	UP
31	—	—	—	—	—	UP
32	UP	UP	UP	UP	UP	—
33	—	UP	UP	UP	UP	—
34	UP	—	UP	UP	UP	—
35	—	—	UP	UP	UP	—
36	UP	UP	—	UP	UP	—
37	—	UP	—	UP	UP	—
38	UP	—	—	UP	UP	—
39	—	—	—	UP	UP	—
40	UP	UP	UP	—	UP	—
41	—	UP	UP	—	UP	—
42	UP	—	UP	—	UP	—
43	—	—	UP	—	UP	—
44	UP	UP	—	—	UP	—
45	—	UP	—	—	UP	—
46	UP	—	—	—	UP	—
47	—	—	—	—	UP	—
48	UP	UP	UP	UP	—	—
49	—	UP	UP	UP	—	—
50	UP	—	UP	UP	—	—
51	—	—	UP	UP	—	—
52	UP	UP	—	UP	—	—
53	—	UP	—	UP	—	—
54	UP	—	—	UP	—	—
55	—	—	—	UP	—	—
56	UP	UP	UP	—	—	—
57	—	UP	UP	—	—	—
58	UP	—	UP	—	—	—
59	—	—	UP	—	—	—
60	UP	UP	—	—	—	—
61	—	UP	—	—	—	—
62	UP	—	—	—	—	—
63	—	—	—	—	—	—
BIT VALUE:	1	2	4	8	16	32

For 5700 series transmitters not shown in this table, refer to the instructions accompanying each transmitter.

SPECIFICATIONS

VISTA-120 CONTROL

Physical:	318mm Wide X 368mm High X 76mm Deep
Electrical:	
VOLTAGE INPUT:	In 110 volt AC mains systems, from Ademco No. 1361 Plug-In Transformer (use 1361CN in Canada) or 4300 transformer (for X-10 installations) rated 16.5VAC, 40 VA or XF10 transformer (for 220VAC, 50Hz X-10 installations)
ALARM SOUNDER OUTPUT:	10VDC-13.8VDC (10.7VAC-14.5VAC for Vista-120FR), 2.8 amps max.; 750mA less aux. current drain
AUXILIARY POWER OUTPUT:	9.6VDC-13.8VDC, 750mA max.
BACK-UP BATTERY:	12VDC, 4AH or 7AH gel cell. No. 467 (12V, 4AH) or 712BNP (12V, 7AH) recommended.
STANDBY:	4 hours min. with 750 mA aux. load using 7 AH battery.
CIRCUIT PROTECTORS:	PTC circuit breakers are used on battery input to protect against reverse battery connections and on alarm sounder output to protect against wiring faults (Shorts). A solid state circuit breaker is used on auxiliary power output to protect against wiring faults (shorts).

DIGITAL COMMUNICATOR

FORMATS SUPPORTED:
- ADEMCO HIGH SPEED
- ADEMCO 4+2 EXPRESS
- ADEMCO LOW SPEED
- ADEMCO CONTACT ID
- SESCOA
- RADIONICS LOW SPEED

LINE SEIZE: Double Pole

6139 Remote Keypad

Physical:

Width:	159mm
Height:	121mm
Depth:	32mm

Electrical: Voltage Input: 12VDC
Current Drain: 100 mA

Interface Wiring:

RED: 12VDC input (+) auxiliary power
BLUE: Not Used
GREEN: Data to control panel
YELLOW: Data from control panel
BLACK: Ground and (-) connection from supplemental power supply.

– INDEX –

1361, v, 14, 15, 58, 59, 162
24 Hour Trouble, 70
24-hour Audible Alarm, 69
24-hour Auxiliary Alarm, 69
24-hour Silent Alarm, 69
2-wire smoke detectors, 2, 19, 20, 68
4100SM, iv, v, 4, 54, 55, 65, 139, 141
4146, 4, 49, 51, 52
4191SN, 25, 29, 60
4204, ii, v, 3, 4, 21, 40, 41, 43, 46, 47, 48, 60, 63, 88, 102, 106, 110, 122, 127
4208UXM, 2
4278EX-SN, 25, 27, 28, 60
4281, ii, 3, 30, 31, 32, 60, 81, 88, 102
4285, ii, v, 3, 43, 44, 45, 46, 47, 68, 73, 76, 88, 101, 102, 107
4297, 24, 25, 26, 29, 60
4300, ii, v, 4, 15, 40, 41, 58, 59, 162
4939SN, 25, 29, 60
4959SN, 25, 29, 60
4-wire smoke detectors, 19, 21, 22
5800EU series, 2, 3, 30, 36, 90
5800TM, ii, 30, 32, 35, 38
5827BD, 31, 32, 35, 38, 62, 82, 102
5839EU, 3, 16, 31, 36
5881, ii, v, 3, 30, 31, 32, 60, 81, 88, 102
5882EU, 3, 30, 31, 32, 60, 88
6139, 3, 16, 60, 102, 162
6139AV, 16
675 Ground Start Module, 14, 49, 50, 60
998MX, 25, 27, 29, 60
AC 60Hz or 50Hz, 83
AC MAINS LOSS KEYPAD SOUNDING, 72
AC Power, v, 14, 15, 57, 58, 105
Access Control, 61, 151
ACCESS CONTROL RELAY, 84
Access Control Schedules, 124
Access schedules, 4
Action Codes, 122
ADD a Master, Manager or Operator Code, 147
Adding An RF Key To An Existing User, 149
addressable devices, 3, 16, 88
Ademco Expanded High Speed Reporting, 130
Ademco Express, 5, 76, 131, 134
ALARM DISPLAY LOCK, 79
ALARM SOUNDER OUTPUT, 162
ALARM VERIFICATION, 83
ALLOW ARMING WITH FAULTS IN EXIT ROUTE, 71
ALLOW DISARM OUTSIDE WINDOW IF ALARM OCCURS, 85
ALLOW DISARMING ONLY DURING ARM/DISARM, 85
ALTERNATIVE COMMUNICATIONS MEDIA REPORTING, 77
ARM WITH LOW BATTERY, 71
Arm/Disarm Commands, 120
Arming Away, 150
Arming Instant, 150
Arming Maximum, 150
Arming Stay, 150
ASCII CONTACT ID BAUD RATE, 78
ASCII CONTACT ID REPORTING WITH OR WITHOUT ACK, 78
Audio Alarm Verification, v, 4, 46, 47, 49
Auto Arming, 110
AUTO BYPASS FAULTED EXIT ROUTE ZONES, 80
Auto Disarming, 111
Auto-Arm Delay, 9, 84, 110
Auto-Arm Warning, 84, 110
Autobypass, 11, 95, 97
AUTOBYPASS EXIT ROUTE FAULTS, 71
AUTO-DISARM DELAY, 85
Auxiliary Device Current Drain, ii, 58, 60
AUXILIARY OUTPUT MODE, 82
AUXILIARY POWER OUTPUT, 162
back-up battery, 15, 59, 162
Battery Standby Table, 59
Battery Test, 155
bell/siren relay, 53
built-in Users Manual, 5
BURG. ALARM COMM. DELAY, 78
BURGLARY TRIGGER FOR RESPONSE TYPE 8, 73
Burglary Walk Test, 155
Burglary/Audible Panic trigger, 49
Button type transmitters, 33, 36
BYPASS ENABLE FOR FIRE ZONES, 79
BYPASS/UNBYPASS ZONES WHEN ARMED, 82
Bypassing Zones, 151
Cabinet Lock, 13
call waiting, 12, 82
CALL WAITING DEFEAT, 82
CHANGE a Master, Manager or Operator Code, 149
Check or Trouble Messages, 156
CHECKSUM VERIFICATION, 76
Chime Mode, 151
CHIME ON EXTERNAL SIREN, 82
COMM. FAILURE, 157
COMM. SPLIT REPORT SELECTION, 81
common area, 3, 6, 7, 8, 9, 79, 80
COMMON AREA 1 PARTITION, 79
COMMON AREA 2 PARTITION, 79
COMMON AREA 3 PARTITION, 80
Communication Defaults For Zones, 135
COMMUNICATION PROGRAMMING GUIDE, 133
CONFIRMATION OF ARMING DING, 72
Contact ID, iii, 2, 3, 5, 27, 46, 47, 48, 65, 74, 76, 77, 78, 83, 97, 128, 129, 130, 131, 133, 134, 147
CONTACT ID EVENT CODES, 132
CPU FAIL TRIGGER OUTPUT, 81
CROSS ZONING PAIR FOUR, 80
CROSS ZONING PAIR ONE, 80
CROSS ZONING PAIR THREE, 80
CROSS ZONING PAIR TWO, 80
Cross-Zoning, 5, 11, 12
Custom Message Display, 100
Custom Words, 99
Daily Open/Close Worksheet, 117
Data Field programme mode, 65
Delaying Closing Time, 152
Delete a Master, Manager or Operator Code, 149
Device Programming, 102
dialler, 4, 11, 46, 48, 61, 63, 77, 140, 155
Dialler Test, 155
Direct Wire Downloading, 141
DISABLE DOWNLOAD CALLBACK, 83
Disarm Delay, 111
Disarming, 150
DISPLAY FIRE ALARMS OF OTHER PARTITIONS, 86
DISPLAY TRBL INSTEAD OF CHECK, 79
DISPLAY TROUBLES OF OTHER PARTITIONS, 86
DOWNLOAD COMMAND ENABLES, 75
DOWNLOAD ID NO, 75
DOWNLOAD PHONE NO., 75
downloader, 4, 36, 76, 139
Downloading, 139
DUAL REPORTING, 76
Duress, 144, 146
ENABLE 5800 RF BUTTON FORCE ARM, 83
ENABLE 5800 RF BUTTON GLOBAL ARM, 83
ENABLE FORCE ARM FOR AUTO-ARM, 85
ENABLE GOTO FOR THIS PARTITION, 85
ENABLE J7 TRIGGERS BY PARTITION, 85
Enter programme mode, 65
ENTRY DELAY #1, 72
ENTRY DELAY #2, 72
ENTRY WARNING, 78
Entry/Exit, 3, 5, 12, 34, 61, 69, 90, 105, 132, 156
EOLR supervision, 2, 19
Event Log, ii, v, 4, 54, 55, 56, 57, 95, 97, 132, 140

EVENT LOG PRINTER ON-LINE, 84
EVENT LOG TYPES, 84
exception reporting, 113
EXIT DELAY #1, 72
EXIT DELAY #2, 72
EXIT DELAY RESET, 80
EXIT DELAY SOUNDING, 82
Exit Error, i, 5, 11, 57, 132
EXIT The User Edit Mode, 149
Final Contact Set, 2
FINAL CONTACT SET, 71
Fire and Silent Panic/Duress triggers, 49
FIRST TEST REPORT TIME, 78
Force Arm, 111
glassbreak detectors, 2, 19
Global arming, iv, 3, 6, 150, 151
Go/No Go Test Mode, 33 39
GOTO, 6, 85, 146, 152, 153
Holiday Definitions, 119
Holiday schedules, 4 113
House ID Sniffer Mode, ii, 32
HSENS, 157
IGNORE EXPANSION ZONE TAMPER, 73
Installer (User 1), 145
INSTALLER CODE, 71
INSTALLER CODE RESTRICTION, 71
INTELLIGENT TEST REPORTING, 73
Interior w/Delay, 70
Interior, Follower, 69
INTERMITTENT SENSOR SUPPRESSION, 78
INTERNAL CLOCK SYNC, 83
INTERNATIONAL DATE FORMAT, 83
KEYPAD PANIC ENABLE, 73
keypads, 3, 4, 6, 10, 16, 17, 18, 23, 27, 31, 32, 35, 38, 40, 44, 50, 61, 62, 63, 68, 82, 85, 86, 88, 102, 110, 140, 144, 147, 150, 153, 155
keyswitch, 4, 22, 29, 49, 51, 52, 68, 72, 75
KEYSWITCH ASSIGNMENT, 72
LCD Display Test, 155
Levels Of Authority, 144
Limitation of Access by Time Worksheet, 124
LO BAT, 157
Loading Communication Defaults, 131
LOG FIRST MAINTENANCE SIGNAL, 84
Long Range Radios, 52
LOW BATTERY TEST INTERVAL, 81
Low Speed FORMAT, 5, 65, 76, 128, 131, 133, 134
LSENS, 157
macro commands, 3, 150
Macros, iv, 3, 153
Main Logic Board, 70
MAINS PRESENCE DISPLAY, 72
Manager, 144
Manager Codes, 145
Manual Relay Activation Mode (#70 Mode, 154
Master, 144
Master Codes, 145
Master keypad, 6, 10
MAX. NUMBER OF ZONES THAT CAN BYPASSED, 82
MAXIMUM No. OF DIALLER ATTEMPTS, 77
MODEM COMM, 157
MULTIFREQUENCY OR PULSE DIAL, 74
MULTIFREQUENCY DIALLING W/ PULSE DIAL BACKUP, 81
MULTIPLE ALARMS, 73
Multiple Partition Access Examples, 147
No. of SECONDS ADDED PER DAY, 83
No. OF SECONDS REMOVED PER DAY, 83
NORMALLY CLOSED OR EOLR (ZONES 2-8), 75
NUMBER OF PARTITIONS, 84
OPEN/CLOSE REPORTING FOR KEYSWITCH, 75
OPEN/CLOSE REPORT FOR INSTALLER CODE, 75
Open/Close Reporting, 145
OPEN/CLOSE REPORTS BY EXCEPTION, 85
Open/Close schedules, 4, 113, 152
Open/Close Windows, 121
Operator Codes, 146
Operator level A, 144
Operator level B, 144
Operator level C, 144
output devices, 4, 40, 107, 111, 127
PABX, 12, 14, 74
PAL 328N, 50
PANIC BUTTON OR SPEED KEY, 80
panic keys, iv, 3, 38, 80, 150, 153
Partition Descriptors, 100
partitions, 2, 3, 4, 6, 7, 9, 10, 12, 18, 19, 24, 26, 30, 39, 46, 50, 70, 75, 79, 80, 82, 84, 86, 102, 112, 114, 116, 117, 118, 119, 122, 144, 145, 146, 147, 148, 149, 151, 152, 167
PassPoint, 2, 3, 4, 61, 62, 63, 90
Perimeter Burglary, 69
PERMANENT KEYPAD DISPLAY BACKLIGHTING, 82
phone line, 12, 13, 14, 44, 46, 47, 48, 76, 139, 156
Polling loop, 2, 24, 70
Polling Loop Current Drain, ii, 58, 60
Polling Loop Extender Module, v, 24, 25
POWER indicator, 157
POWER UP IN PREVIOUS STATE, 74
Powerline Carrier devices, 3, 4, 15, 40, 41, 43, 58, 103, 104, 106, 122, 127
PREVENT FIRE TIME-OUT, 73
PREVENT ZONE XXX BYPASS, 75
PRIMARY FORMAT, 76
PRIMARY PHONE NUMBER, 74
PRIMARY SUBSCRIBER ACCT #, 74
PRINTER BAUD RATE, 84
Programming Alpha Descriptors, 98
Programming Holiday Schedules, 119
Programming Open/Close Schedules, 118
Programming Output Devices, 104
Programming Temporary Schedules, 126
Programming Time Windows, 117
Protection zones, 68
PSTN, 5
PTT approvals, 2
Quick Arm feature, 74, 144
Quick Arming, 151
RANDOMISE AC MAINS LOSS REPORT, 73
RCVR SET UP ERROR, 157
real-time clock, 142
RECEIVER TYPE, 81
receiver's DIP switches, 31
Relay Commands, 120
Relay Programming, 103
RELAY TIMEOUT XXX MINUTES, 84
RELAY TIMEOUT YYY SECONDS, 84
Relay Voice Descriptors, 107
Relay zones, 68
Remote Keyswitch, v, 51
Report Code Programming, 95
REPORT/LOG ZONE TYPE 23, 78
Reporting Formats, 128
RESTORE REPORT TIMING, 78
Restore/Supervisory Codes, 96
RF RCVR SUPERVISION CHECK-IN INTERVAL, 81
RF Receiver, v, 3, 57, 60, 68, 89
RF Serial Number Clear Mode, 109
RF TRANSMITTER CHECK-IN INTERVAL, 81
RF TX LOW BATTERY REPORT ENABLE, 81
RF TX LOW BATTERY SOUND, 80
RING DETECTION COUNT, 76
ROBOFON VERSION OF CONTACT ID, 77
Robofone, 2
Rules on Authority Levels, 146
Scheduling, iii, 4, 40, 110, 114, 115, 117, 118, 119, 122, 124, 127
SECONDARY PHONE NUMBER, 75
SECONDARY SUBSCRIBER ACCT #, 78
SELF ACTIVATING SIREN OUTPUT, 71
SEND CANCEL IF ALARM + OFF, 83
Sequential Mode Programming, 93
serial number multiplex, 4, 90
serial printer, 4, 54, 55, 141
Sescoa/Radionics, 5, 76, 133

SESCOA/RADIONICS SELECT, 76
Setting the Time and Date, 142
SILENCE SOUNDER DURING AAV, 83
Silent Panic/Duress trigger, 52
SOUNDER TIMEOUT, 72
Speed Keys, 153
STANDARD/EXPANDED REPORT, 76
SUMMER TIME, 84
Supervised Fire, 69
SUPPRESS ALL KEYPAD DISPLAYS, 79
SUPPRESS FIRE ALARM RELAY, 75
SUPPRESS KEYPAD ARMING STATUS INDICATIONS, 79
SUPPRESS TX SUPERVISION SOUND, 82
SUPPRESS USE OF "ARMED" LED ON KEYPADS, 79
SUPPRESS WIRELESS SIREN ACTIVATION, 76
SUPRESS STATUS LED OUTPUT, 83
SYSTEM LO BAT, 157
Telephone Line Monitor, 2
TELEPHONE MODULE PHONE CODE, 73
TELEPHONE SYSTEM SELECTION, 77
temporary schedule, 113
Temporary Schedule Menu Mode, 125
TEST REPORT INTERVAL, 73
TIME STAMP FORMAT, 84
time windows, 4, 110, 111, 112, 114, 115, 116, 117, 120, 124, 126
Time Windows Definitions, 116
Timed Events, 4, 115, 122
Time-Driven Event Programming, 122
Time-Driven Events, 113, 120
TLM INPUT ON ZONE 9, 81
Transmitter Battery Life, 33, 36
Transmitter ID Sniffer Mode, 39
trigger, 4, 46, 47, 49, 50, 51, 73, 81, 82, 86, 102, 103, 106, 107, 146, 148, 155
Trouble Conditions, 156
USE PARTITION DESCRIPTORS, 85
USER BYPASS OF TAMPER FAULTS, 82
user codes, 3, 6, 144, 145
USER RESET OF TAMPER ALARMS, 81
User Scheduling Menu Mode, 127
Using The Built-In User's Manual, 152
VERIFIED ALARM REPORT ENABLE, 77
VGM, 61
Video Alarm Verification, 4, 48, 83, 105
Video Receiver, 4
Video Transmitter, v, 4, 48
Viewing Zone Descriptors, 152
Vista Gateway Module, 61, 63, 70
V-Link, 4, 65, 75, 139
VOLTAGE INPUT, 162
WIRELESS 5827/5827BD KEYPAD ASSIGNMENT, 82
WIRELESS KEYPAD TAMPER DETECT, 82
wireless zones, 2, 3, 30, 33, 89, 157
XF10, v, 4, 15, 40, 41, 42, 58, 59, 162
XM10E, 4, 15, 41, 42
ZONE 9 RESPONSE TIME, 72
Zone Alarm Reports, 96
Zone Descriptors, 98
Zone Index, 68
Zone List Programming, 106
Zone Programming, 89
Zone Response Type Definitions, 68, 69
ZONE TYPE 5 ALWAYS ALARM, 71

WARNING!
THE LIMITATIONS OF THIS ALARM SYSTEM

While this System is an advanced wireless security system, it does not offer guaranteed protection against burglary, fire or other emergency. Any alarm system, whether commercial or residential, is subject to compromise or failure to warn for a variety of reasons. For example:

- Intruders may gain access through unprotected openings or have the technical sophistication to bypass an alarm sensor or disconnect an alarm warning device.
- Intrusion detectors (e.g., passive infrared detectors), smoke detectors, and many other sensing devices will not work without power. Battery-operated devices will not work without batteries, with dead batteries, or if the batteries are not put in properly. Devices powered solely by AC will not work if their AC power supply is cut off for any reason, however briefly.
- Signals sent by wireless transmitters may be blocked or reflected by metal before they reach the alarm receiver. Even if the signal path has been recently checked during a weekly test, blockage can occur if a metal object is moved into the path.
- A user may not be able to reach a panic or emergency button quickly enough.
- While smoke detectors have played a key role in reducing residential fire deaths, they may not activate or provide early warning for a variety of reasons in as many as 35% of all fires. Some of the reasons smoke detectors used in conjunction with this System may not work are as follows. Smoke detectors may have been improperly installed and positioned. Smoke detectors may not sense fires that start where smoke cannot reach the detectors, such as in chimneys, in walls, or roofs, or on the other side of closed doors. Smoke detectors also may not sense a fire on another level of a residence or building. A second floor detector, for example, may not sense a first floor or basement fire. Finally, smoke detectors have sensing limitations. No smoke detector can sense every kind of fire every time. In general, detectors may not always warn about fires caused by carelessness and safety hazards like smoking in bed, violent explosions, escaping gas, improper storage of flammable materials, overloaded electrical circuits, children playing with matches, or arson. Depending on the nature of the fire and/or location of the smoke detectors, the detector, even if it operates as anticipated, may not provide sufficient warning to allow all occupants to escape in time to prevent injury or death.
- Passive Infrared Motion Detectors can only detect intrusion within the designed ranges as diagrammed in their installation manual. Passive Infrared Detectors do not provide volumetric area protection. They do create multiple beams of protection, and intrusion can only be detected in unobstructed areas covered by those beams. They cannot detect motion or intrusion that takes place behind walls, ceilings, floors, closed doors, glass partitions, glass doors, or windows. Mechanical tampering, masking, painting or spraying of any material on the mirrors, windows or any part of the optical system can reduce their detection ability. Passive Infrared Detectors sense changes in temperature; however, as the ambient temperature of the protected area approaches the temperature range of 32° to 40°C, the detection performance can decrease.
- Alarm warning devices such as sirens, bells or horns may not alert people or wake up sleepers if they are located on the other side of closed or partly open doors. If warning devices are located on a different level of the residence from the bedrooms, then they are less likely to waken or alert people inside the bedrooms. Even persons who are awake may not hear the warning if the alarm is muffled by noise from a stereo, radio, air conditioner or other appliance, or by passing traffic. Finally, alarm warning devices, however loud, may not warn hearing-impaired people.
- Telephone lines needed to transmit alarm signals from a premises to a central monitoring station may be out of service or temporarily out of service. Telephone lines are also subject to compromise by sophisticated intruders.
- Even if the system responds to the emergency as intended, however, occupants may have insufficient time to protect themselves from the emergency situation. In the case of a monitored alarm system, authorities may not respond appropriately.
- This equipment, like other electrical devices, is subject to component failure. Even though this equipment is designed to last as long as 20 years, the electronic components could fail at any time.

The most common cause of an alarm system not functioning when an intrusion or fire occurs is inadequate maintenance. This alarm system should be tested weekly to make sure all sensors and transmitters are working properly. The security console (and remote keypad) should be tested as well.

Wireless transmitters (used in some systems) are designed to provide long battery life under normal operating conditions. Longevity of batteries may be as much as 4 to 7 years, depending on the environment, usage, and the specific wireless device being used. External factors such as humidity, high or low temperatures, as well as large swings in temperature, may all reduce the actual battery life in a given installation. This wireless system, however, can identify a true low battery situation, thus allowing time to arrange a change of battery to maintain protection for that given point within the system.

Installing an alarm system may make the owner eligible for a lower insurance rate, but an alarm system is not a substitute for insurance. Homeowners, property owners and renters should continue to act prudently in protecting themselves and continue to insure their lives and property.

We continue to develop new and improved protection devices. Users of alarm systems owe it to themselves and their loved ones to learn about these developments.

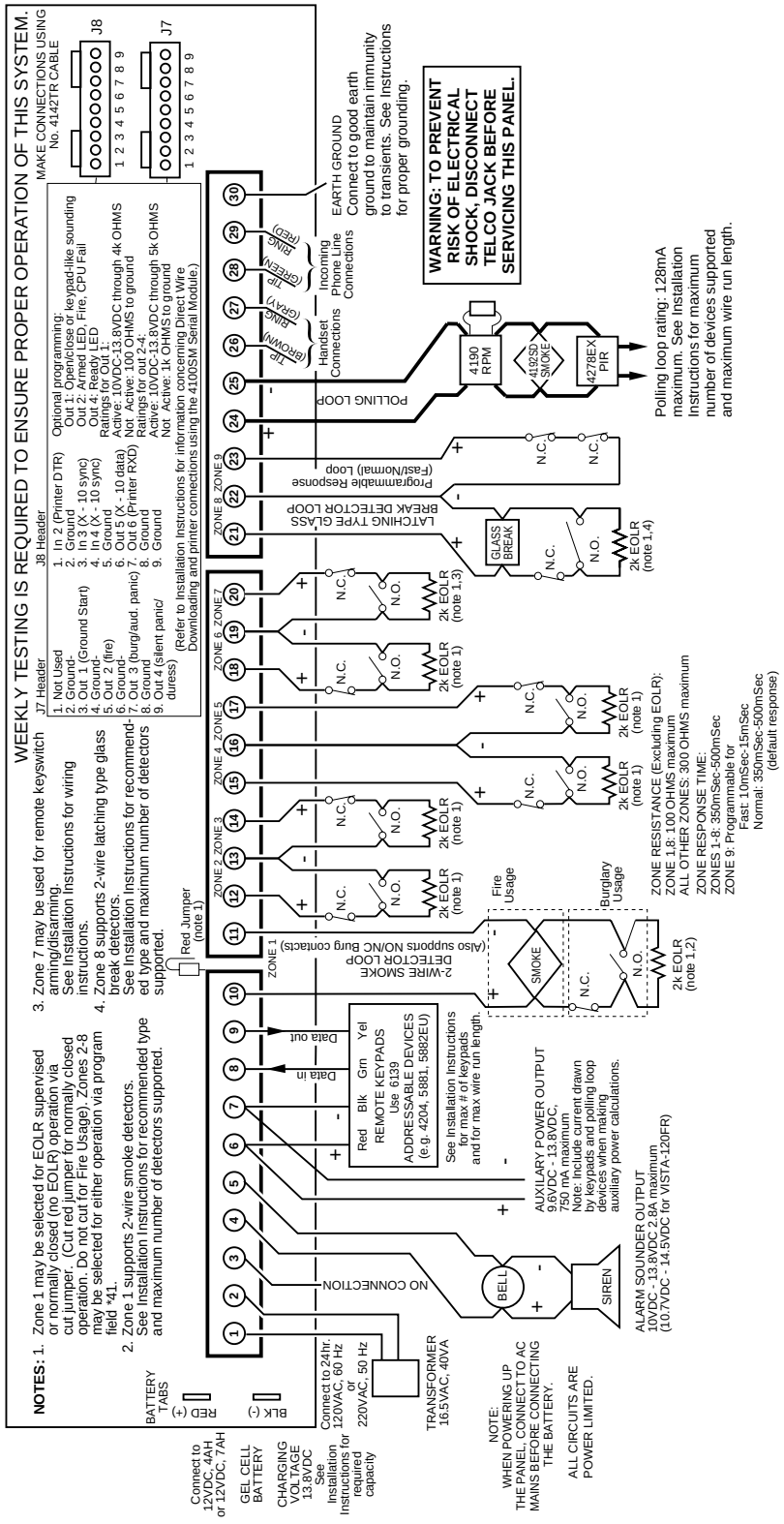

VISTA-120 SUMMARY OF CONNECTIONS DIAGRAM

ADEMCO LIMITED WARRANTY

Alarm Device Manufacturing Company, a Division of Pittway Corporation, and its divisions, subsidiaries and affiliates ("Seller"), 165 Eileen Way, Syosset, New York 11791, warrants its products to be in conformance with its own plans and specifications and to be free from defects in materials and workmanship under normal use and service for 24 months from the date stamp control on the product or, for products not having an Ademco date stamp, for 12 months from date of original purchase unless the installation instructions or catalog sets forth a shorter period, in which case the shorter period shall apply. Seller's obligation shall be limited to repairing or replacing, at its option, free of charge for materials or labor, any product which is proved not in compliance with Seller's specifications or proves defective in materials or workmanship under normal use and service. Seller shall have no obligation under this Limited Warranty or otherwise if the product is altered or improperly repaired or serviced by anyone other than Ademco factory service. For warranty service, return product transportation prepaid, to Ademco Factory Service, 165 Eileen Way, Syosset, New York 11791.

THERE ARE NO WARRANTIES, EXPRESS OR IMPLIED, OF MERCHANTABILITY, OR FITNESS FOR A PARTICULAR PURPOSE OR OTHERWISE, WHICH EXTEND BEYOND THE DESCRIPTION ON THE FACE HEREOF. IN NO CASE SHALL SELLER BE LIABLE TO ANYONE FOR ANY CONSEQUENTIAL OR INCIDENTAL DAMAGES FOR BREACH OF THIS OR ANY OTHER WARRANTY, EXPRESS OR IMPLIED, OR UPON ANY OTHER BASIS OF LIABILITY WHATSOEVER, EVEN IF THE LOSS OR DAMAGE IS CAUSED BY THE SELLER'S OWN NEGLIGENCE OR FAULT.

Seller does not represent that the products it sells may not be compromised or circumvented; that the products will prevent any personal injury or property loss by burglary, robbery, fire or otherwise; or that the products will in all cases provide adequate warning or protection. Customer understands that a properly installed and maintained alarm may only reduce the risk of a burglary, robbery, fire or other events occurring without providing an alarm, but it is not insurance or a guarantee that such will not occur or that there will be no personal injury or property loss as a result. CONSEQUENTLY, SELLER SHALL HAVE NO LIABILITY FOR ANY PERSONAL INJURY, PROPERTY DAMAGE OR OTHER LOSS BASED ON A CLAIM THE PRODUCT FAILED TO GIVE WARNING. HOWEVER, IF SELLER IS HELD LIABLE, WHETHER DIRECTLY OR INDIRECTLY, FOR ANY LOSS OR DAMAGE ARISING UNDER THIS LIMITED WARRANTY OR OTHERWISE, REGARDLESS OF CAUSE OR ORIGIN, SELLER'S MAXIMUM LIABILITY SHALL NOT IN ANY CASE EXCEED THE PURCHASE PRICE OF THE PRODUCT, WHICH SHALL BE THE COMPLETE AND EXCLUSIVE REMEDY AGAINST SELLER. This warranty replaces any previous warranties and is the only warranty made by Seller on this product. No increase or alteration, written or verbal, of the obligations of this Limited Warranty is authorized.

ALARM DEVICE MANUFACTURING CO.
A DIVISION OF PITTWAY CORPORATION
165 Eileen Way, Syosset, New York 11791
Copyright © 1997 PITTWAY CORPORATION

N5944-8V1 Rev. B 6/99