Tecom Challenger Alarm Panel

✓ *Panel Dialler wiring*

Background:

The PM45 & PM1048-3G (v3) communicator now has a terminal block for the connection of the female 611 fly lead (supplied). If the Alarm Panel also has a terminal block for PSTN connection, we recommend you use your own cable between the Alarm Panel dialler and PM45 & PM1048-3G (v3).
This type of installation negates the use of the female 611 fly lead, decreasing your installation time.
For four (4), six (6) and eight (8) pin RJ connectors, please refer to manufactures wiring diagram.

There are four minimum requirements from the Alarm panel for successful communication:

1) Must have an eight (8) digit primary phone. E.g. 12345678 or 55555555.
2) A four (4) digit account number.
3) Must be Contact ID format.
4) Must be set for tone (DTMF) dialling.
5) Optional is open / close reporting, must be enabled for Pocket Secure App.
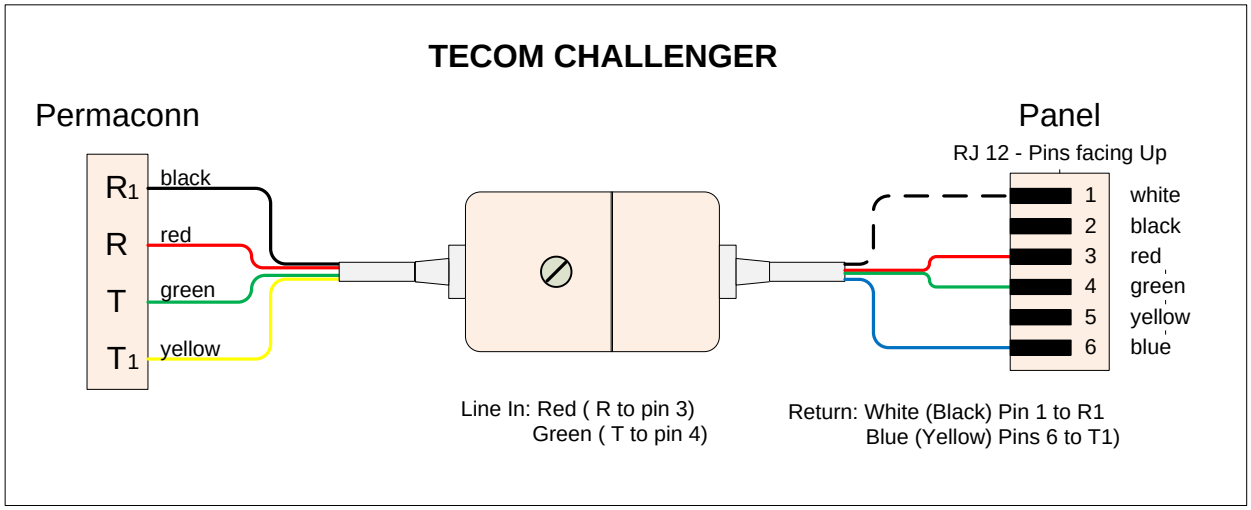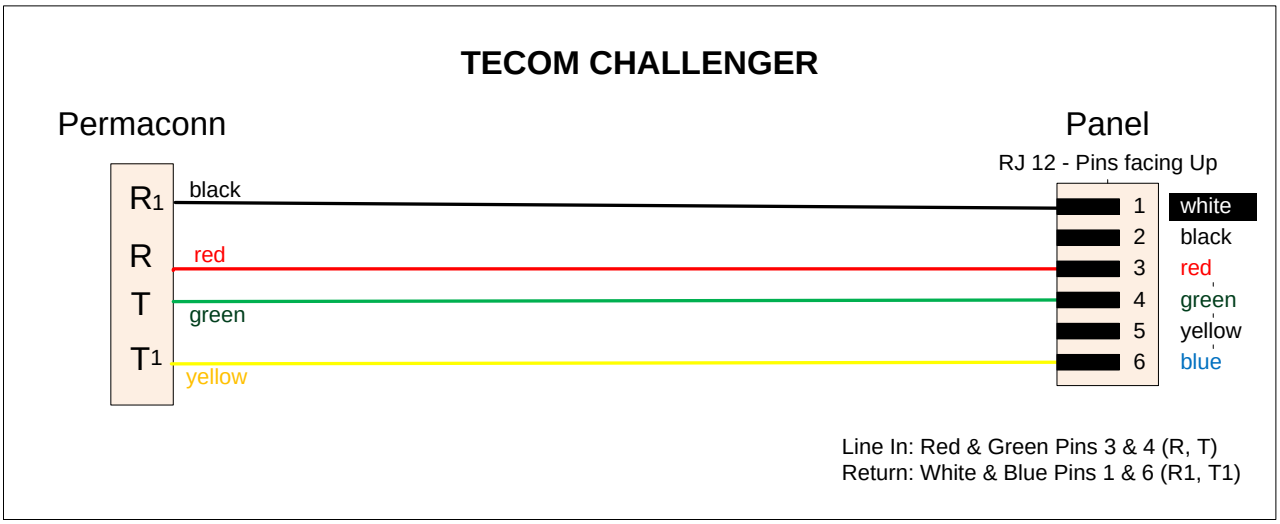
Dialler Lead wiring between Permaconn and Tecom Challenger Alarm Panel: