tyco | DSC

GS4015/GS4005/3G4005/TL405LE 2.00 Universal Cellular/Ethernet Communicators Installation Guide

CE

Johnson Controls

N.	Parts
1	Cover
2	Base
3	Indicator lights (LED)
7	Closing screw (parked position)
8	Base mounting holes (4)
9	Cover hinge
10	Antenna cable hole
11	2700 mAh rechargeable battery (optional): versions with housing only
12	Wall tamper device
13	Hole for wall tamper device fixing
14	SIM holder
15	PC-LINK connector
16	Programming jumpers: see “Description of jumpers” on page 11
17	USB port: versions with housing only
18	Tamper contact
19	Terminal boards

N.	Parts
20	Electronic board locator pins
21	**JP2** current draw limiter jumper (versions with housing only): see “Description of jumpers” on page 11
22	Battery connector: versions with housing only
23	ANTLTE-02 adapter cable
24	Adapter cable nut
25	Integrated antenna: versions with housing only
26	Hole for antenna cable on metal bracket
27	Metal bracket
28	ANTLTE-02, multi-band antenna with 2 m cable and SMA connector (optional)
29	Multi-band antenna with 2 m cable and MMCX connector
30	Electronic board mounting holes (4)
31	Ethernet port: versions with housing only

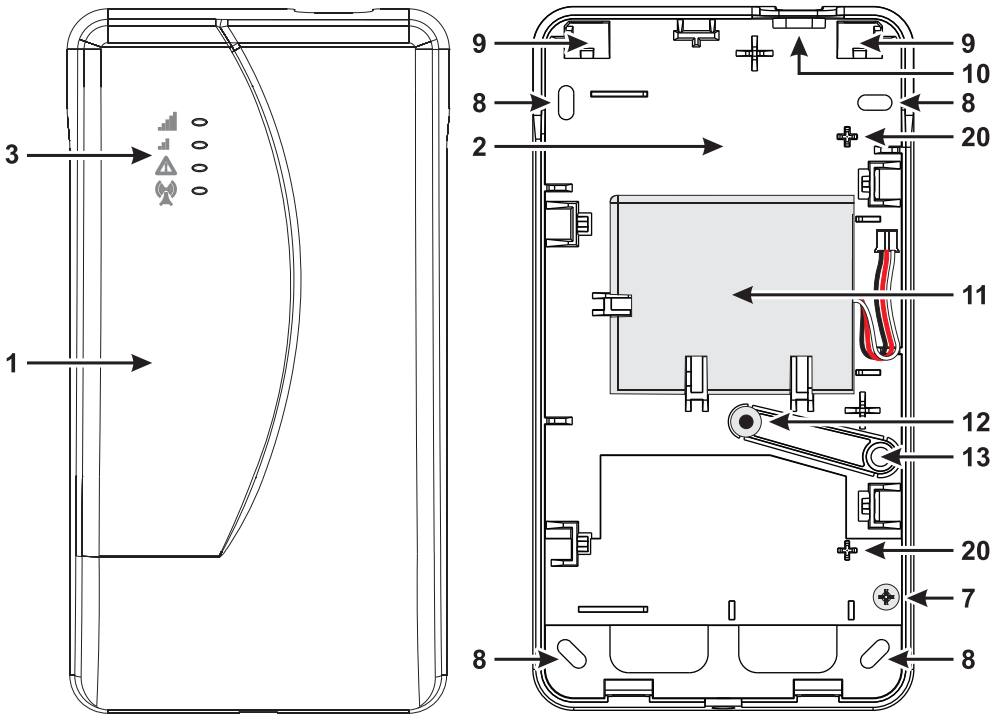

Figure 1 – Identification of parts: version with housing.

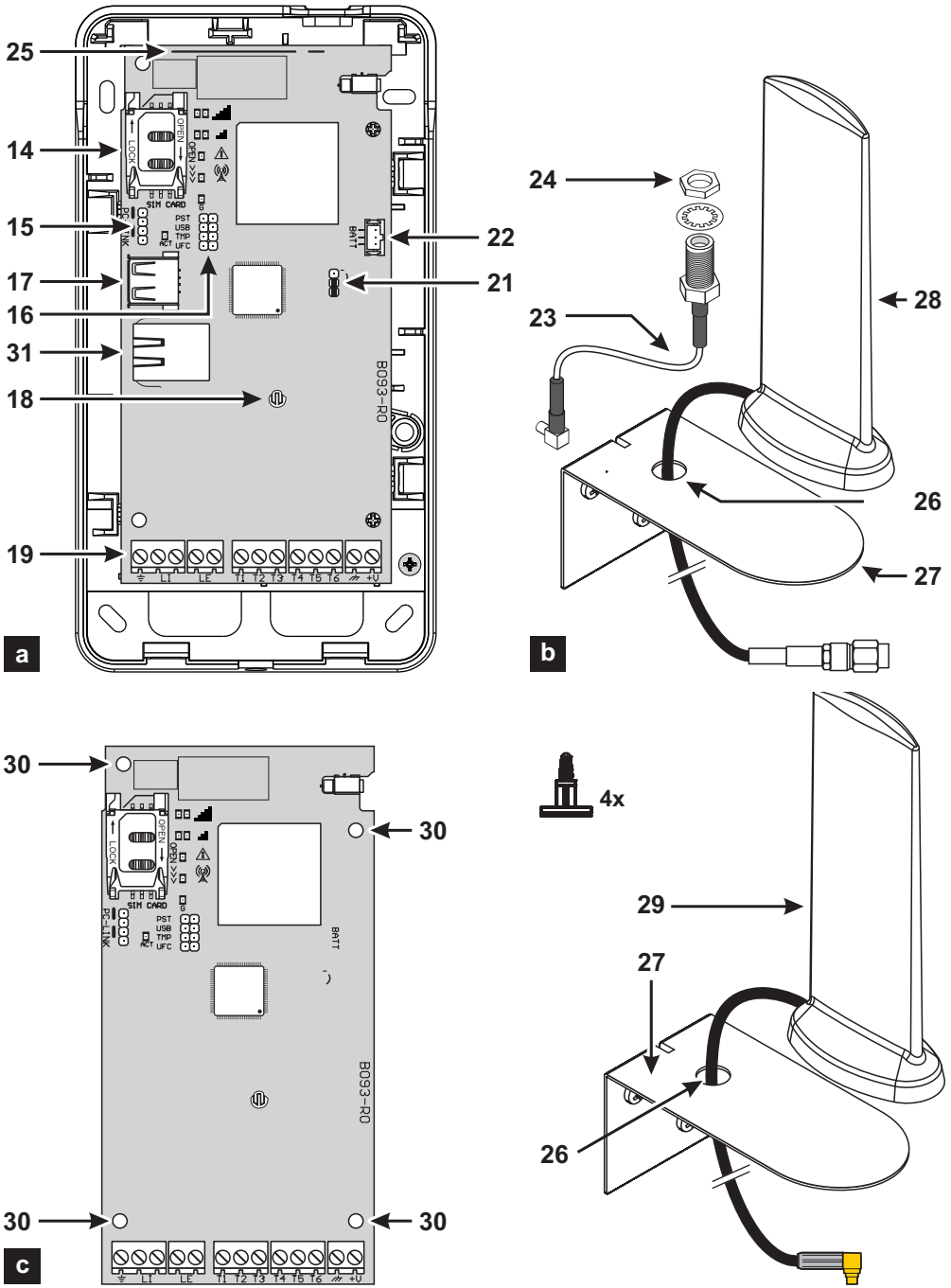

Figure 2 – Identification of parts: a) version with housing; b) ANTLTE-02, multi-band *antenna with 2 m cable and SMA connector (optional); c) kit version.*

INTRODUCTION 5
General specifications 6
Technical specifications 8
Identification of parts 10
Description of jumpers 11
Description of indicator lights 12
Description of terminals 14
Installation 15
Connection example 23
GENERAL DESCRIPTION 24
Access levels 25
USB connector functions 26
Power Monitor 27
Internal events 28
Operating Principles 30
Priority handling 32
Pay as you go balance check 33
Panel Transmission Monitoring (PTM) 34
Activating outputs 35
SMS Programming 37
ConnectAlarm app 41
PC PROGRAMMING 42
Phonebook **46**
Options **49**
Network Settings **52**
Inputs/Outputs **55**
Communicator **62**
IP Receivers **68**
Voice Messages **70**
PSTN/PTM **71**
Event Log **72**
Firmware Update **73**
Status **74**
Downloading and Uploading 76
APPENDIX 80
Conformity with EN 50136-2:2013 80
Operations with the USB key 82
Pass-Through 86

These instructions apply to communicators with firmware revision 2.00 and above.
Hereby, Tyco Safety Products Canada Ltd. declares that the radio equipment type GS4015, GS4005, GS4005-K, 3G4005/EU, 3G4005-K/EU and TL405LE-EU are in compliance with Directive 2014/53/EU.
The full text of the EU declaration of conformity is available at the following internet address: ***GS4015***, *http://dsc.com/pdf/1711001;* ***GS4005***, *http://dsc.com/pdf/1603004;* ***GS4005-K***, *http://dsc.com/pdf/1603005;* ***3G4005/EU***, *http://dsc.com/pdf/1603002;* ***3G4005-K/EU***, *http://dsc.com/pdf/1603003;* ***TL450LE-EU***, *http://dsc.com/pdf/2001003.*
The GS4005, GS4005-K, 3G4005/EU and 3G4005-K/EU product models have been certified by IMQ/A to be compliant with standards:
EN 50136-1:2012 *and* ***EN 50136 2:2013*** *for alarm transmission system performance* ***SP2*** *(D2, M2, T2, S0, I0) for vocal/text alarm messages and* ***SP4*** *(D3, M3, T4, S2, I3) for digital messages;*
EN 50131-10*, Security Grading 2;*
T031*;*
EN 50130-5 *Class I.*
The TL405LE-EU product model has been certified by IMQ/A to be compliant with standards:
EN 50136-1:2012 *and* ***EN 50136 2:2013*** *for alarm transmission system performance* ***SP2*** *(D2, M2, T2, S0, I0) for vocal/text alarm messages and* ***DP3*** *(D3, M3, T4, S2, I3) for digital messages;*
EN 50131-10*, Security Grading 2;*
T031*;*
EN 50130-5 *Class I.*
To ensure conformity with the ***T031*** *standard, the Communicator must be connected to the panel with terminals* ***LI*** *and the following events and messages/codes must be set: INTRUSION ALARM, TAMPER ALARM, MAIN POWER FAILURE, BATTERY FAILURE, HOLD-UP, ARMING, DISARMING, INHIBITED ZONE AND ISOLATED ZONE.*
The communicator is certified IMQ-SECURITY SYSTEMS if powered by the panel and without backup battery.
Installation of these systems must be carried out strictly in accordance with the instructions described in this manual and in compliance with the local laws and bylaws in force. The above mentioned devices have been designed and made to the highest standards of quality and performance. The manufacturer recommends that the installed system should be completely tested at least once a month. Digital Security Controls shall not be responsible for damage arising from improper installation or maintenance by unauthorized personnel. Digital Security Controls reserves the right to change the technical specifications of this product without prior notice.
RECYCLING INFORMATION
Digital Security Controls recommends that customers dispose of their used equipment (panels, detectors, sirens, and other devices) in an environmentally sound manner. Potential methods include reuse of parts or whole products and recycling of products, components, and/or materials. For specific information see www.dsc.com.

WASTE ELECTRICAL AND ELECTRONIC EQUIPMENT (WEEE) DIRECTIVE

In the European Union, this label indicates that this product should NOT be disposed of with household waste. It should be deposited at an appropriate facility to enable recovery and recycling. For specific information see www.dsc.com.

INTRODUCTION

The devices made by GS4015, GS4005, 3G4005 and TL405LE series are cellular communicators that provide a backup PSTN line and are able to transmit vocal (GS4005, 3G4005 and TL405LE only) and SMS alarm messages to the end user, and digital messages to supported Sur-Gard System receivers. By means of the **ConnectAlarm** app running on Android and iOS mobile devices, you can manage the communicator, and the control panel wired to it, and view the communicator's and control panel's events. The TL405LE model has an Ethernet interface that may be used as main communication channel, or for cellular communication channel backup (dual-path), for digital message transmission to supported Sur-Gard System receivers. The Ethernet interface enables an alternative and faster way to program the communicator. The following versions are available:

- GS4015: communicator board with 2G module in plastic housing.
- GS4005: communicator board with 2G module in plastic housing.
- GS4005-K: kit including communicator board with 2G module, antenna with 2 m cable, adapter and metal bracket.
- 3G4005/EU: communicator board with 3G module in plastic housing, for the Europe Union market.
- 3G4005-K/EU: kit including communicator board with 3G module, antenna with 2 m cable, adapter and metal bracket, for the Europe Union market.
- TL405LE-EU: dual-path communicator board with LTE module and Ethernet interface, in plastic housing, for the Europe Union market.
- TL405LE-LAT: dual-path communicator board with LTE module and Ethernet interface, in plastic housing, for the Latam market.
- TL405LE-ANZ: dual-path communicator board with LTE module and Ethernet interface, in plastic housing, for the Australian and New Zealand markets.

For special installation requirements, a remote outdoors antenna ANTLTE-10 with 10 m cable is available.

The information in this manual is common to all versions. The term "communicator" refers to functions shared by all versions. Information relating to specific models is highlighted with reference to the respective code.

☞ *Some of the topics found in this manual may not be relevant to your version: refer to "General specifications" on page 6 to see the features of your version. References to Ethernet apply to TL405LE only.*

This manual provides instructions for programming and using the communicator.

Safety instructions

Read the safety information before you install the equipment.

⚠ *Important: This equipment must be installed by a skilled person only. A skilled person is an installer with appropriate technical training. The installer must be aware of potential hazards during installation and measures available to minimize risks to the installer and other people.*

- Before you install this equipment, disconnect all power sources (for example mains, battery, and telephone line) connected to the alarm panel.
- Install the equipment indoors in a non-hazardous environment where the following conditions are met:
  – Pollution degree - Maximum 2
  – Over voltages - Category II
- Internal wiring must be routed to prevent strain on wire and terminal connections, loose terminal connections, and damage to conductor insulation.
- Instruct the user that there are no user serviceable parts in this equipment. All equipment must be serviced by a skilled person

☞ *These instructions must be used in areas together with the panel's installation manual. Follow all instructions given in this manual.*

Model	GS4015	GS4005	GS4005-K	3G4005/EU	3G4005-K/EU	TL405LE-EU	TL405LE-LAT	TL405LE-ANZ
Boxed	Y	Y	N	Y	N	Y	Y	Y
Mobile phone standard[a]	2G	2G	2G	3G	3G	LTE	LTE	LTE
Dual Band	N	N	N	Y	Y	N	N	N
Quad Band	Y	Y	Y	N	N	Y	Y	Y
Dual path	N	N	N	N	N	Y	Y	Y
Simulates a PSTN line.	Y	Y	Y	Y	Y	Y	Y	Y
Detects the absence of a PSTN line and automatically switches to cellular network	Y	Y	Y	Y	Y	Y	Y	Y
Manages and reports incoming and outgoing phone calls	Y	Y	Y	Y	Y	Y	Y	Y
Cellular signal strength indicator	Y	Y	Y	Y	Y	Y	Y	Y
Terminals, programmable as open-collector outputs or inputs	3	6	6	6	6	6	6	6
T1, T2 and T3 terminals	N	Y	Y	Y	Y	Y	Y	Y
Remote management of inputs and outputs through the **ConnectAlarm** app	Y	Y	Y	Y	Y	Y	Y	Y
Protection against overvoltage on the phone line	Y	Y	Y	Y	Y	Y	Y	Y
Integrated antenna	Y	Y	N	Y	N	Y	Y	Y
External antenna with magnetic base	N	N	Y	N	Y	N	N	N
SMS message transmission to mobile phone and **ConnectAlarm** app for communicator's events	Y	Y	Y	Y	Y	Y	Y	Y
Voice message transmission over cellular network for communicator's events	N	Y	Y	Y	Y	Y	Y	Y
Conversion of Contact ID and SIA messages of control panel connected to **LI** terminals, to SMS, and push notifications to **ConnectAlarm** app	Y	Y	Y	Y	Y	Y	Y	Y
Conversion of Contact ID and SIA messages of control panel connected to **LI** terminals, to voice messages over cellular network	Y	Y	Y	Y	Y	Y	Y	Y
Contact ID and SIA message transmission to PSTN and IP Sur-Gard System I, II, III, IV and 5 receivers	Y	Y	Y	Y	Y	Y	Y	Y
Options programmable by PC	Y	Y	Y	Y	Y	Y	Y	Y
Communicator blocked when PINs are at default (EN50136-2)	N	Y	Y	Y	Y	Y	Y	Y
Programmable text messages (each at most 70 characters long)	26	32	32	32	32	32	32	32
Text messages for each input	2	2	2	2	2	2	2	2
Status text messages	18	18	18	18	18	18	18	18
Periodic text message	1	1	1	1	1	1	1	1
Programmable telephone numbers (16 digit max.)	32	32	32	32	32	32	32	32
Phone numbers for sending SMS messages	8	8	8	8	8	8	8	8
Phone numbers for transmitting events to Sur-Gard receivers	8	8	8	8	8	8	8	8
Phone numbers for remote output activation	32	32	32	32	32	32	32	32
Remote output activation via call recognition, or SMS	Y	Y	Y	Y	Y	Y	Y	Y
Residual credit monitoring for prepaid SIM cards	Y	Y	Y	Y	Y	Y	Y	Y
Panel Transmission Monitoring (PTM)	Y	Y	Y	Y	Y	Y	Y	Y
Tamper detection	Y	Y	N	Y	N	Y	Y	Y
PC-LINK port	Y	Y	Y	Y	Y	Y	Y	Y
Type A USB connector (Host and device)	N	Y	N	Y	N	Y	Y	Y
Ethernet interface	N	N	N	N	N	Y	Y	Y
Programming with USB key	N	Y	N	Y	N	Y	Y	Y
Advanced diagnostics and event log exporting by means USB key	N	Y	N	Y	N	Y	Y	Y
Loading custom default via USB key	N	N	N	N	N	Y	Y	Y
Firmware programming and updates, both local and remote	Y	Y	Y	Y	Y	Y	Y	Y
Alarm event transmission via cellular network	Y	Y	Y	Y	Y	Y	Y	Y
Alarm event transmission via Ethernet channel	N	N	N	N	N	Y	Y	Y

Model	GS4015	GS4005	GS4005-K	3G4005/EU	3G4005-K/EU	TL405LE-EU	TL405LE-LAT	TL405LE-ANZ
Priority programmable with PSTN/Cellular	Y	Y	Y	Y	Y	Y	Y	Y
Two-way communications with cellphone	Y	Y	Y	Y	Y	Y	Y	Y
Optional backup battery	N	Y	N	Y	N	Y	Y	Y
Current limitator (**JP2** jumper)	N	Y	N	Y	N	Y	Y	Y
Alarm panel management and status monitoring	Y	Y	Y	Y	Y	Y	Y	Y
Remote programming of PowerSeries panels via cellular network (Pass-Through)[b]	Y	Y	Y	Y	Y	Y	Y	Y
Remote programming of PowerSeries panels via Ethernet (Pass-Through)[c]	N	N	N	N	N	Y	Y	Y
Jamming detection	Y	Y	Y	Y	Y	Y	Y	Y

a. *Check that the SIM operator in use supports 2G, 3G, or LTE standard, depending on the model, in the area where the communicator is installed.*

b. *See “Pass-Through” on page 86 for more information.*

c. *See “Pass-Through” on page 86 for more information.*

Technical specifications

The power for the communicator is supplied by the panel to which it is connected (10.7 V to 27.6 V) or by an external power supply which also recharges an optional backup battery, if necessary. The sole purpose of the battery is to supply power in case of failure of the primary power source (8 hours stand-by).

☞ *When the communicator is powered by the battery, ONLY communicator events are transmitted.*

The primary power and (optional) battery voltages are supervised.

The power supply for communicators with housing must be SELV, with power limited to 1 A.

Version	GS4005-K 3G4005-K/EU	GS4015 GS4005 3G4005/EU	TL405LE-EU TL405LE-LAT TL405LE-ANZ
Input Voltage	from 10.7 to 27.6 V⎓	from 10.7 to 27.6 V⎓	from 10.7 to 27.6 V⎓
Standby average current @ 13.8 V⎓, without battery (not including outputs)	90 mA	90 mA	110 mA
Average current consumption per hour	100 mA	100 mA	120 mA
Maximum current draw in current limited mode @ 13.8 V⎓ (versions with housing only, not including outputs)	230 mA	230 mA	230 mA
Maximum current draw @ 13.8 V⎓ (not including outputs)	450 mA	450 mA	470 mA
Maximum current on open-collector output	100 mA	100 mA	100 mA
Maximum loop resistance of line between the device connected in series on LI	1 Kohm	1 Kohm	1 Kohm
Maximum number of parallel devices connected on LI	1	1	1
Environmental class	**II**	**II**	**II**
Operating temperature	from -10 to +40°C	from -10 to +40°C	from -10 to +40°C
Humidity	from 0 to 95%	from 0 to 95%	from 0 to 95%
Dimensions (LxHxD)	76x151x20 mm (PCB only)	101x186x41 mm	101x186x41 mm
Weight	66 g	250 g	250 g

Table 1 – Technical specifications.

Version	Operating frequency (MHz)		
	GSM/GPRS/EDGE	UMTS/HSPA	LTE
GS4015, GS4005, GS4005-K	850/900/1800/1900	N/A	N/A
3G4005/EU, 3G4005-K/EU	900/1800	900/2100	N/A
TL405LE-EU	900/1800	900/1800/2100	700/800/900/1800/2100/2600
TL405LE-LAT	850/900/1800/1900	850/1700/1900/2100	700/850/1700/1800/1900/2100/2600
TL405LE-ANZ	N/A	800/850/900/2100	700/800/850/900/1800/2100

Table 2 – Operating frequency.

Maximum radio-frequency power	Class 4 (2 W) @ 850/900 MHz, GSM Class 1 (1 W) @ 1800/1900 MHz, GSM Class E2 (0.5 W) @ 850/900 MHz, EDGE Class E2 (0.4 W) @ 1800/1900 MHz, EDGE Class 3 (0.25 W) @ 850/900/1900/2100 MHz, WCDMA Class 3 (0.2 W) @700/800/850/900/1800/1700/1900/2100/2600 MHz, LTE

Table 3 – Maximum radio-frequency power.

Interface type between SPT (Supervised Premises Transceiver) and AS (Alarm System)	Proprietary interface			
ATS (Alarm Transmission System)	SINGLE PATH		DUAL PATH	
Alarm Transmission System performance	SP4 for digital messages	SP2 for vocal/ text messages	DP3 for digital messages	SP2 for vocal/ text messages
Average transmission time	D3 (20 s)	D2 (60 s)	D3 (20 s)	D2 (60 s)
Maximum transmission time	M3 (60 s)	M2 (120 s)	M3 (60 s)	M2 (120 s)
Reporting time	T4 (180 s)	T2 (25 h)	T4 (180 s)	T2 (25 h)
Substitution security	S2	S0	S2	S0
Information security	I3	I0	I3	I0

Table 4 – EN 50136-1:2012 and EN 50136-2:2013 specifications.

Identification of parts

Numbers given **in bold** in this manual refer to the main parts of the communicator shown in figure 1 and 2, and the table on page 2.

Jumper	Position	Description
PST		Pass-Through disabled (factory setting).
		Pass-Through enabled (see “Pass-Through” on page 86).
USB		The communicator behaves as a USB Device (factory setting).
		The communicator behaves as a USB Host.
TMP		Anti-tamper function enabled (factory setting).
		Anti-tamper function disabled.
UFC		Future use.
JP2 (versions with housing only)		No limit to communicator current draw (factory setting).
		Communicator current draw limited to 230 mA. ⚠ *Backup battery required!*

Table 5 – Description of jumpers.

Description of indicator lights

The communicator is equipped with indicator lights (LED) which report the following information.

☞ *During initialisation, all LEDs light up for less than 1 second. During factory settings restore, LEDs and are off while LEDs and are on.*

LED	Colour	Name	Description
	Green/yellow	Cellular signal strength	Type of network for packet service (see table 7). Cellular signal strength (see table 8). Type of communication (see table 9).
	Red	Fault	See table 10.
	Yellow	Line status	On: the communicator has switched to the simulated PSTN. Slow flashing: line occupied, voice message transmission.
G	Green	Cellular network status	Technical assistance LED.
ACT	Green	USB	On: Host. Off: Device. Slow flashing: error. Fast flashing: activity.

Table 6 – Indicator LED.

LED	Colour	Type of network for packet service
	Green	2G
	Yellow	3G
	Green and Yellow[a]	LTE

Table 7 – Type of network for packet service.

a. *Green and yellow colours may not be visible on the communicator's cover, for the communicators with housing: you may see just the yellow colour.*

		Cellular signal strength
Off	Off	No cellular signal.
Off	On	Low cellular signal strength.
On	On	High cellular signal strength.

Table 8 – Cellular signal strength.

		Type of communication
Slow flashing	Slow flashing	Initialisation: the LEDs flash until the communicator receives a cellular signal.
Fast flashing	Off	SMS incoming: the LED flashes for a few seconds.
Slow flashing	Off	Remote session: the LED may flash for a few seconds after the end of the session.
Off	Slow flashing	Voice call: reports the communicator's voice call, NOT the voice calls of the panel connected to the communicator, if any.

Table 9 – Type of communication.

Fault LED

This LED is usually off. It flashes to indicate a fault. The communicator monitors faults in the order given in table 10. The most important fault status is indicated, with the respective number of flashes of the RED LED, as shown in the following table.

Priorities	Description	Flashes
1 (HIGH)	Firmware problem (incorrect firmware): invalid data in external flash memory.	1
2	Power problems: the power voltage falls below 10 V.	2
3	Battery problems: the battery voltage falls below 3.4 V.	3
4	Factory PIN: the EN50136 option is enabled and the User, Installer or Level 4 PIN is that set in the factory.	4
5	Radio module fault: the microprocessor is unable to communicate with the radio module during the initialisation sequence.	5
6	SIM problem: SIM card PIN check enabled.	6
7	Cellular network problem: the radio module is unable to connect to the cellular network.	7
8	Mobile data network problem: the radio module is unable to connect to the mobile data network.	8
9	Future use.	9
10	IP 1 receiver problem: initialisation failure; supervision failure; no ACK.	10
11 (LOW)	IP 2 receiver problem: initialisation failure; supervision failure; no ACK.	11

Table 10 – Fault LED.

Description of terminals

Terminals T1, T2, T3, T4, T5 and T6 can be programmed as described below.

- Open-collector outputs: the outputs can be activated by programmed events (automatic activation), SMS or by call recognition (remote activation); see “Activating outputs” on page 35 for details. The maximum current draw per output is 100 mA.
- Inputs: the inputs send SMS or voice messages when activated.

Terminals	GS4005/3G4005/TL405LE	GS4015
⏚	Earth: this terminal must be connected to the electrical system earth to protect the device against overvoltage on the telephone line and to satisfy safety requirements.	
LI	Internal telephone line: these terminals must be connected to the panel or other communications terminal.	
LE	External telephone line: these terminals may be connected to the PSTN line.	
T1	Factory setting: output, PSTN fault.	N/A
T2	Factory setting: output, no cellular network.	N/A
T3	Factory setting: input, interconnection present.	N/A
T4	Factory setting: output, tamper.	Factory setting: output, PSTN fault.
T5	Factory setting: output, cellular fault.	Factory setting: output, no cellular network.
T6	Factory setting: output, Jamming.	Factory setting: output, tamper.
⏚	Ground: power negative and common terminals for the open-collector outputs.	
+V	Power supplied by panel 10.7 to 27.6 V⎓: make sure it is protected and current limited (Limited Power Source — LPS) in conformity with EN 60950-1:2006 standard). To connect the power, use cable of no more than 3 meters length, and 0.75 mm² cross-section. For shorter cables, use appropriate cross-sections.	

⚠ *Connect the power supply and telephone circuits after the communicator is mounted and connected to the building ground circuit.*
Before fitting or removing the SIM card, make sure the communicator is NOT powered up.

☞ *The communicator shall be installed only by a QUALIFIED TECHNICIAN, indoors, in a safe, dry position, away from RF transmitting equipment.*
Position the communicator for good cellular signal coverage.
DO NOT route any cable over the circuit board.
Do not use power cables which are more than 3 m long.

Installing the kit version

The kit version is composed of a circuit board for mounting inside a burglar alarm panel, preferably in a metal housing, and an antenna for connecting to the board with a coaxial cable.
During normal operation, the board, antenna, and cable may generate electromagnetic fields and may disturb nearby electronic equipment which is not immune to such fields. Position the board as far away as possible from electronic equipment, and mount the antenna on the housing's outer surface or far away from it, using the appropriate bracket.
Route a minimum amount of coaxial cable into the metal housing; gather any excess outside the housing.

To install the kit version, proceed as described below and in figure 3.

1. Open the panel.
2. Find a place inside the panel to mount the board, including its wiring.
3. Mount the four provided adhesive plastic mounts into holes 30 of the communicator, as shown in figure 3.
4. Secure the communicator inside the panel.
5. Optional: If the panel has a plastic housing, or if you want to place the antenna within 2 metres of the panel for better cellular signal strength, mount bracket 27 in the desired position and route the antenna cable through hole 26.
6. Position antenna 29 on the panel's metal housing or on bracket 27, so that the magnetic base adheres to the surface.
7. Route the antenna cable through an opening in the housing.
8. Connect the antenna cable to communicator connector 43.
9. Fit the TMP jumper to disable tamper detection.
10. Continue with the installation as described in paragraph “Power and testing” on page 20.
11. Close the panel.

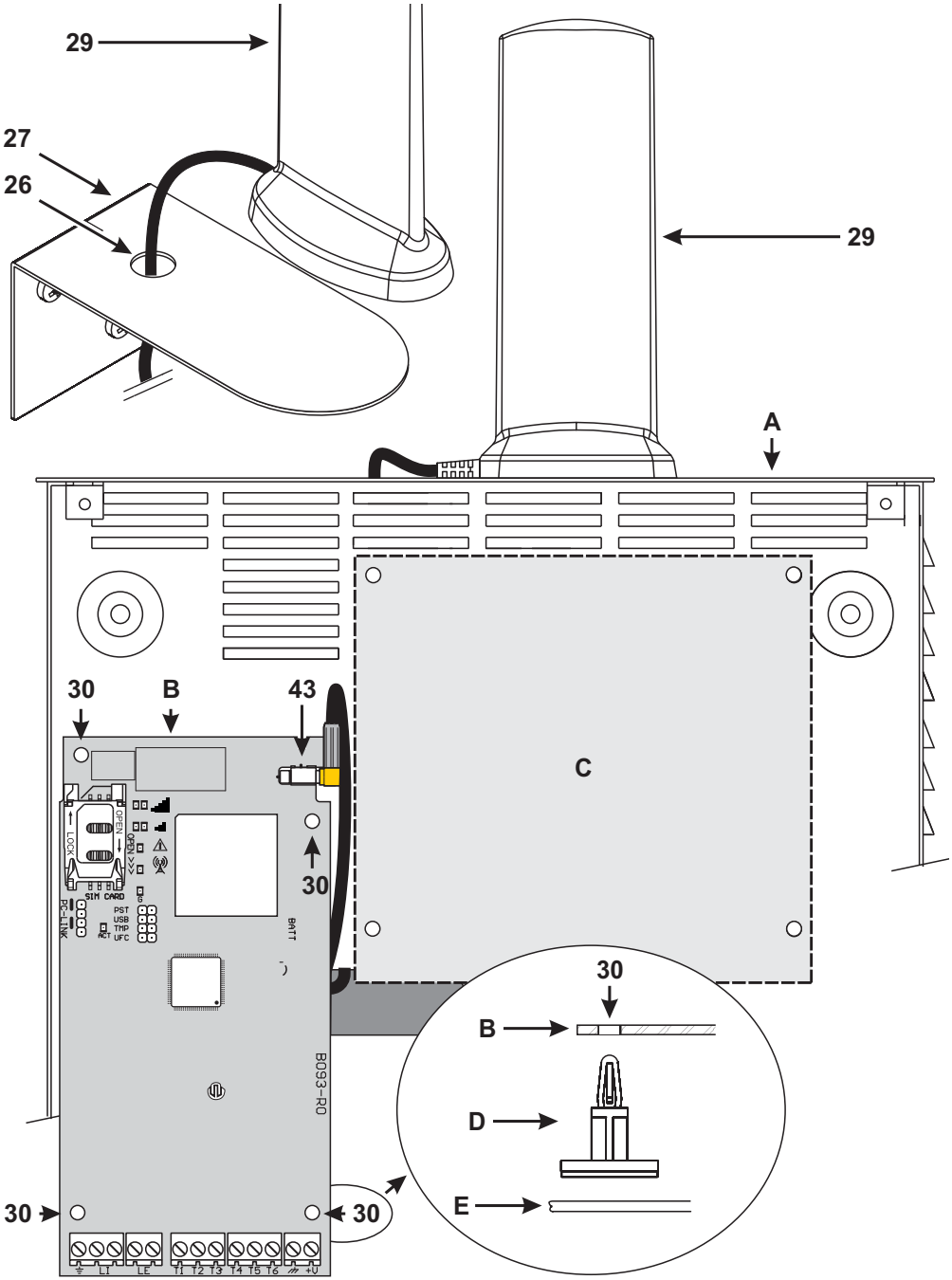

Figure 3 – Installing the kit communicator: A) metal housing; B) communicator board; C) panel motherboard; D) adhesive plastic mount; E) base of metal housing.

Installing the version with housing

The version with housing must be mounted to a wall with screws and plugs (not included) as described below and shown in figure 4.

1. Open the communicator: insert a flathead screwdriver into holes 33 and prise the cover off the base, then slide the cover upwards to separate it from the base completely.
2. If you wish to fit the optional battery LIB2A6, read the following steps, otherwise go to step 7.

⚠ *Risk of explosion if battery is replaced by an incorrect type. Dispose of used battery according to the manufacturer's instructions. Batteries are to be replaced by service persons only.*

3. Remove the electronic board: compress hooks 34 to release the board from the base.
4. Fit the battery as shown in figure 4.

☞ *Make sure the silicon/graphite grommet 12 is in place.*

5. Restore the board: first insert its left side under hooks 31, then press the right side gently down until it snaps into place.
6. Connect the battery to connector 22 after having powered the communicator up with terminals +V and ⏚.

☞ *The communicator will NOT operate correctly if it is powered only by the battery when first switched on.*

7. Mark the positions for the 8 base mounting holes and the position of hole 13 for the wall-tamper device.
8. Drill holes in the marked positions.

⚠ *Take care not to damage any wires or tubes running inside the wall.*

9. Route the ducted cables in the wall through openings 35 or break out the tabs 32 to route the exposed cables into the housing.
10. Mount the base to the wall.
11. Continue with the installation as described in paragraph “Power and testing” on page 20.
12. For dual-path version only, break the knock-out 35 if you connected a Ethernet cable: break section 35a, and 35b, according to the Ethernet cable type you are using, as shown in figure 4a and 4b.
13. Close the communicator: remove screw 7 from its parked position; slightly tilt the cover; approach the top of the cover to the base; slide the cover downwards; press the bottom of the cover against the base until it snaps into place; if necessary, secure the cover to the base with screw 7 in hole 36.

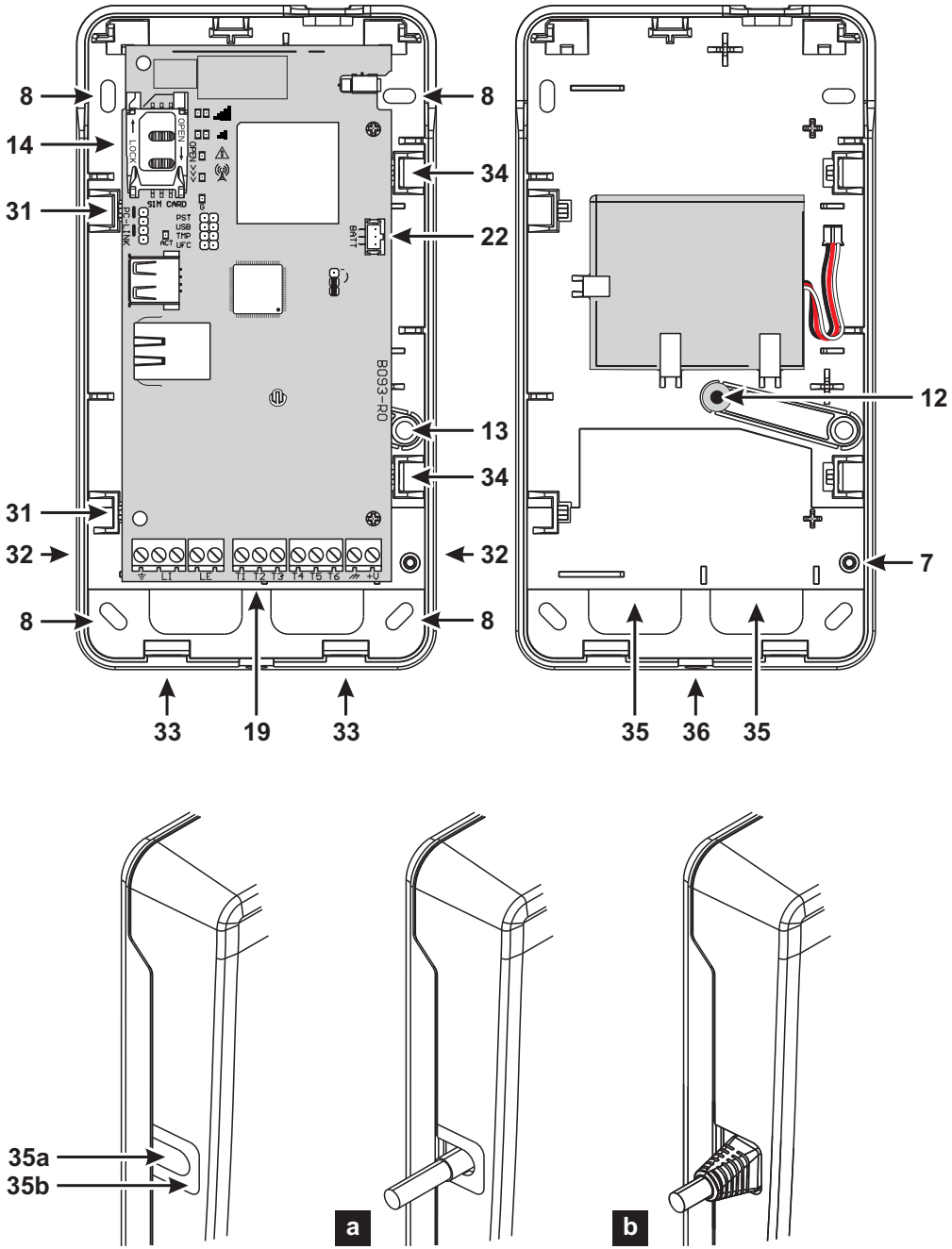

Figure 4 – Installing the communicator with housing.

Power and testing

1. Fit the SIM card into SIM holder 14 as shown by the arrows, with its contacts facing downwards.

☞ *The operation related to the communicator's Ethernet channel works properly without inserting SIM card also.*
For the communicator to work properly, you must use a 32 kB or better SIM card.
You must disable the SIM card's PIN before fitting it into the communicator.
Disable call transfer on the SIM card.

2. Set the jumpers as required by your application (see “Description of jumpers” on page 11).
3. Make the connections to terminal block 19 as described in paragraph “Connection example” on page 23.
4. For the dual-path version only, connect the Ethernet cable to the connector 31, if required.
5. Power up the communicator: all LEDs will light up for 1 second, then LEDs ⚠ *and* ((•)) will stay on for a few seconds, after which LED ⚠ will flash 4 times to indicate that the User, Installer and Level 4 Installer PINs are the factory default settings.
6. Use the Console to change the PINs, as described in chapter “PC PROGRAMMING” on page 42, and enable the communicator.
7. Check the signal strength: make sure that at least LED ▂ turns on; if the LED ▂▃▄▅ is on, the signal strength is excellent.

If LEDs ▂▃ and ▂▃▄▅ are off, the signal is NOT strong enough: reposition the communicator or try installing the optional antenna ANTLTE-02 (versions with housing only) or ANTLTE-10, as described in the respective paragraphs.

☞ *The communicator complies with the EN 50136-2 standard and, for this reason, its access codes have to be set at the first power up, by means of the Console, in this way the communicator functionality will be enabled.*

If you do not need the compliance with the EN 50136-2 and like to start working without the Console, please proceed as follows.

1. Make sure that the communicator settings are at default (read “Restore Factory Settings” on page 45 to restore the default settings).
2. Insert the PST jumper.
3. Connect the communicator to the power.
4. Wait until the ⚠ and ((•)) LEDs switch off, then remove the PST jumper.

☞ *Leave the PST jumper inserted if you want to use the pass-through functionality.*

Installing the antenna ANTLTE-02

The ANTLTE-02 has greater gain than the communicator's integrated antenna in the version with housing, and can be mounted indoors within 2 meters of the communicator, to improve cellular reception, as described below and shown in figure 5.

☞ *Position the antenna to optimise cellular reception.*

1. Break the tab closing hole 37.
2. Remove the electronic board: compress hooks 34 to release the board from the base.
3. Remove nut 24 and washer 38 from adapter cable 23.
4. Fit adapter cable connector 39 into hole 37, the secure it with nut 24: washer 38 is not required.
5. Connect adapter cable connector 40 to connector 43.

6. Restore the board: first insert its left side under hooks 31, then press the right side gently down until it snaps into place.

☞ *Make sure the adapter cable is routed as shown in figure 5.*

7. Secure metal bracket 28 as desired with holes 41.
8. Route antenna connector 42 through hole 26 in the bracket.
9. Position antenna 29 on the bracket so that its magnetic base adheres to its surface.
10. Connect antenna connector 42 to adapter cable connector 39.

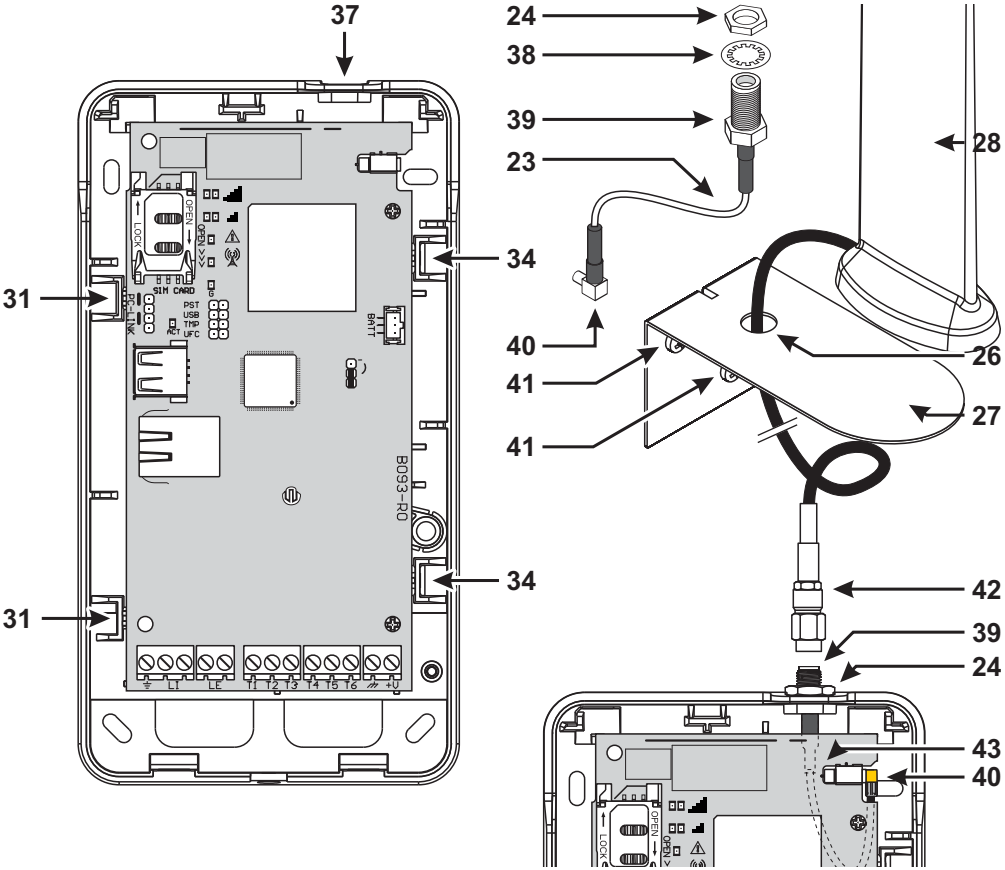

Figure 5 – Installing the antenna ANTLTE-02.

Installing the antenna ANTLTE-10

The ANTLTE-10 has greater gain than the communicator's integrated antenna in the version with housing, and can be mounted outdoors within 10 m of the communicator, to improve the mobile reception.

Refer to the installation instructions included with the ANTLTE-10 antenna.

Tamper detection

The version with housing of the communicator is equipped with a device which detects when the cover is opened and the communicator is removed from the wall (tampering).

Tampering is reported by the Tamper event, to which actions can be associated (activate outputs, send voice, SMS or digital message) with the Console: the factory setting is that terminal T4 on GS4005/3G4005/TL405LE or terminal T6 on GS4015 is floating (it is normally connected to earth) in the event of tamper.
Once you have programmed the function, close the cover and power up the communicator.
After initialisation, open the cover and check that the communicator actually executes the actions programmed for the tamper detection.

⚠ *Incorrect connections may result in FTC fault or improper operation. Inspect wiring and ensure connections are correct before applying power. DO NOT route any wiring over circuit boards; maintain at least 1" (24.5 mm) separation. A minimum 1/4" (6.4 mm) separation must be maintained at all points between Power Limited wiring and all other Not-Power Limited wiring.*

☞ *To ensure conformity with EN 50136-2, the communicator must be connected and programmed as described in paragraph "Conformity with EN 50136-2:2013" on page 80.*

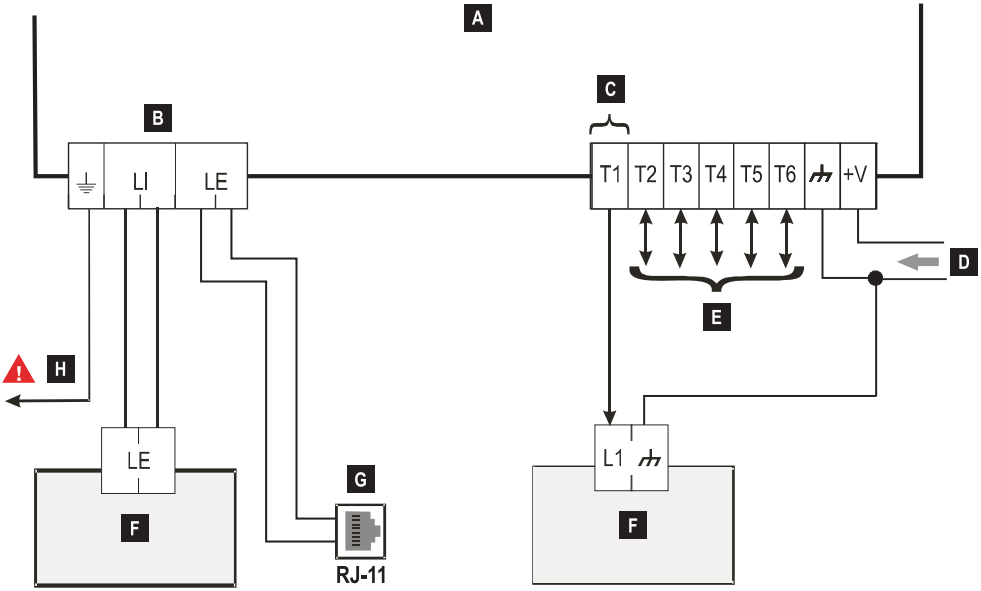

Figure 6 – Connection example: A) Communicator; B) disconnect the telephone line before servicing the unit; C) example connection of terminal T1 programmed as open-collector output; D) power 10.7 - 27.6 V⎓; E) terminals T1, T2, T3, T4, T5 and T6 can be programmed as open-collector outputs or input lines; F) burglar alarm panel; G) connection to telephone line (PSTN); H) ground connection (obligatory).

GENERAL DESCRIPTION

This communicator can communicate with central stations, and send both SMS and voice messages, via the cellular network; it can also simulate a PSTN line in case of malfunction (phone line failure) or substitute of one completely in areas with cellular coverage in which PSTN calls are not available.

☞ *SIA and CID messages may NOT be understood by the PSTN receivers due to distortion on the cellular network. It is recommended to forward SIA and CID messages to IP receivers instead, when the PSTN line fails, as indicated in "Phonebook" on page 46: see the option* ***IP Receiver on GSM Path****.*

☞ *Due to the nature of the cellular network, the communicator may be used solely for its intended purpose and NOT as a modem for sending faxes or data or for remote assistance services.*

It can report alarms over the cellular network, for reliable, fast communications with central stations equipped with compatible Sur-Gard System receiver. The performance of the communicator depends largely on the coverage, and it should not be installed without having first checked the position of the antenna for best reception (the LED ▂▃▅ at least must be on).

The dual path versions have an Ethernet interface that can be used as primary or backup communication channel with the Sur-Gard receivers. The Ethernet interface also enable an alternate and faster way of communication with panels and the console software.

The communicator has terminals (T) which can be programmed as inputs or outputs (see "Inputs/Outputs" on page 55).

Access levels

This paragraph describes how to access the communicators functions, according to EN50136 standard.

If the **EN50136** option is enabled (factory default; see "Options" on page 49), the communicator can handle all four levels of user access to its functions. The access levels are as follows.

- Level 1: access to function display, indications (LEDs used to report faults, cellular status, and PSTN status) and messages (SMS, voice, etc.) available to all users without PIN; this level does not allow any programming.
- Level 2 (normal user): access to communicator status information (e.g. use of the Console to display the status page, programming options and events buffer). This level requires a PIN. Factory setting: 000000.
- Level 3 (installer): access to configuration functions including addition, removal and replacement of components and other operations which directly or indirectly affect the communicator's functions (e.g. upload/download programming options with the console, display **Status** page and events buffer). This level requires a PIN. Factory setting: 111111.

☞ *If the **EN50136** option is enabled, the installer must be authorised by the normal user.*

- Level 4 (level 4 installer): access to firmware updates and **Status** page display. This level requires a PIN. Factory setting: 222222.

☞ *The level 4 installer must be authorised by the installer.*

To ensure compliance with EN 50136-2: 2013, the PINs for access to levels 2, 3 and 4 are 6 digit numbers.

USB connector functions

The communicator has a USB A connector to enable it to work as a device, to connect it to a PC, or as host, to handle a USB key (see “Description of jumpers” on page 11).

To connect the communicator to a PC, you need a USB cable with A connectors at each end (hub cable).

The USB interface has the following characteristics.

- Conformity: USB 2.0.
- Full speed data: 12 Mbit/s.
- Max. length of cable: 5 m.
- Max. current in host mode: 500 mA.
- Vout in Host mode: 5 V nominal.
- USB key file system: FAT32.

USB device

The USB interface will be an alternative to communications with the RS232 port (PC-Link). It will have the same functions as the RS232 and will be used with the Console to:

- update the firmware (level 4 installer only);
- upload/download communicator options and audio files (installer only; the normal user can only upload);
- upload the communicator's events buffer (installer and normal user only);
- check the communicator's status in real time (all users).

USB Host

Allows you to use a USB key for the following operations:

- firmware updates;
- load custom default;
- upload/download settings and audio files;
- export the events buffer;
- export the communicator's debug buffer (technical service only).

These functions are available only if the EN50136 option is disabled.

The device can be powered in the following ways:

1. by the burglar alarm panel, equipped with a backup battery, in which case the communicator must operate at voltages in the range 10.7 to 27.6 V.
2. by an external 12 V power supply, in which case the power supply must recharge the communicator's optional backup battery (8 hours of operation following primary power outage).

In both cases, the battery ensures that the communicator is still operational in case of power failure.

The power and battery voltages are supervised so that the communicator can report the following events:

- Power fault/restore event.
- Power fault/restore message (voice / SMS / message to the IP receivers).

Since the device can operate with or without an external backup battery (without input current limitation), the following two scenarios correspond to a power failure.

Power voltage check

The power voltage will be supervised to detect problems. The voltage is checked every 100 ms. The following conditions apply to the device without external backup battery:

- Power problem event: when the voltage drops below 10 V (the PSTN interface is turned off).
- Power problem restore: when the voltage rises above 12 V.
- Start Energy Save mode: when the voltage drops below 9 V (the USB interface and the radio module are turned off).
- Quit Energy Save mode: when the voltage rises above 10.7 V.

☞ *When the communicator is in Energy Save mode, the current draw does not exceed 175 mA. The maximum current consumption, in Energy Save mode with battery connected and no action in progress is around 70 mA and is less than 150 mA during voice calls.*

Battery voltage check

The battery voltage will be supervised to check for any faults and that the battery itself is present. The voltage is checked every 100 ms. The value is processed (mean of values) to eliminate peaks. The following conditions apply to the device with external backup battery:

- Battery problem event: when the battery voltage drops below 3.4 V.
- Battery problem restore: when the battery voltage rises above 3.7 V.
- Start Energy Save mode: when the battery voltage drops below 3.2 V.
- Quit Energy Save mode: when the battery voltage rises above 3.4 V.
- Battery disconnected event: when the battery voltage drops below 2.0 V.
- Battery disconnected restore: when the battery voltage rises above 2.0 V.
- Battery overload event: when the battery voltage rises above 4.4 V.
- Battery overcharge restore: when the battery voltage drops below 4.3 V.

☞ *When the communicator is powered ONLY by the battery, you can NOT use the USB port.*

Along with the external events (panel events decoded with the Contact ID or SIA protocol on the simulated PSTN line), the communicator can send voice messages, SMS messages, and Contact ID or SIA messages for the events listed in the Table 11, as indicated in "Communicator" on page 62.

Event	Description
Input 1 Event	This occurs when terminal T1 is programmed as an input and the conditions for its activation occur (see "Inputs/Outputs" on page 55).
Input 2 Event	Like **Input 1 Event** but for terminal T2.
Input 3 Event	Like **Input 1 Event** but for terminal T3.
Input 4 Event	Like **Input 1 Event** but for terminal T4.
Input 5 Event	Like **Input 1 Event** but for terminal T5.
Input 6 Event	Like **Input 1 Event** but for terminal T6.
Input 1 Restore	This occurs when terminal T1 is programmed as an input, and returns to standby status (see "Inputs/Outputs" on page 55).
Input 2 Restore	Like **Input 1 Restore** but for terminal T2.
Input 3 Restore	Like **Input 1 Restore** but for terminal T3.sono
Input 4 Restore	Like **Input 1 Restore** but for terminal T4.
Input 5 Restore	Like **Input 1 Restore** but for terminal T5.
Input 6 Restore	Like **Input 1 Restore** but for terminal T6.
Mains Fault	Happens when the power voltage (terminal +V) drops below 10 V.
Mains Fault Restore	Happens when the power voltage (terminal +V) rises above 12 V.
Battery Fault	Happens when the battery voltage falls below 3.4 V.
Battery Restore	Happens when the battery voltage rises above 3.7 V.
Panel Interconnection Fault	Happens when the terminal programmed as the **Panel Interconnection Present** input is activated (see "Inputs/Outputs" on page 55).
Panel Interconnection Restore	Happens when the terminal programmed as the **Panel Interconnection Present** input is deactivated (see "Inputs/Outputs" on page 55).
Cellular Receiver 1 Fault	Happens when the communicator is NOT able to communicate with receiver 1, over the cellular channel: initialisation failure, supervision failure or receiver does not respond (see "IP Receivers" on page 68).
Cellular Receiver 2 Fault	Like **Cellular Receiver 1 Fault** but for receiver 2.
Cellular Receiver 1 Restore	Happens when the communicator is able to communicate with receiver 1, over the cellular channel: initialisation successful, supervision successful or receiver responds (see "IP Receivers" on page 68).
Cellular Receiver 2 Restore	Like **Cellular Receiver 1 Restore** but for receiver 2.
Ethernet Receiver 1 Fault	Happens when the communicator is NOT able to communicate with receiver 1, over the Ethernet channel: initialisation failure, supervision failure or receiver does not respond (see "IP Receivers" on page 68).
Ethernet Receiver 2 Fault	Like Ethernet Receiver 1 Fault but for receiver 2.
Ethernet Receiver 1 Restore	Happens when the communicator is able to communicate with receiver 1, over the Ethernet channel: initialisation successful, supervision successful or receiver responds (see "IP Receivers" on page 68).
Ethernet Receiver 2 Restore	Like Ethernet Receiver 1 Restore but for receiver 2.

Table 11 – Description of events handled by communicator.

Event	Description
PSTN Fault	Happens when the voltage on terminals LE is less than 2.5 V for the set **LE Failure Timeout (sec)** (see "Timeouts" on page 71).
PSTN Fault Restore	Happens when the voltage on terminals LE is more than 2.5 V for the set **LE Restore Timeout (sec)** (see "Timeouts" on page 71).
GSM Fault	Happens when the cellular signal is missing.
Cellular Network Fault	The communicator can NOT connect to the cellular data network.
Cellular Network Restore	The communicator can connect to the cellular data network.
Tamper Event	Happens when tamper detection is enabled (see "Description of jumpers" on page 11) and the communicator is opened or removed from the wall (versions with housing only).
Tamper Restore	Happens when tamper detection is enabled (see "Description of jumpers" on page 11) and the communicator is closed again or mounted to the wall (versions with housing only).
FTC Fault	Happens when an action fails (voice call, SMS, digital message).
FTC Restore	Happens when the last action in the queue terminates successfully.
Periodic Call/SMS	Happens when programmed (see "Communicator Options" on page 62).
Periodic Test Transmission	Happens when programmed (see "Communicator Options" on page 62).
Antenna Fault	Happens when the antenna is missing or the antenna has limited function (ANTLTE-02 only).
RF Jam Detected	Happens when the communicator detects a jamming attack.
Ethernet DoS Detected Fault	Happens when the communicator detects a DoS[a] attack on the Ethernet channel.
Ethernet DoS Detected Restore	Happens when the communicator does NOT detect any DoS attack.
Ethernet Network Fault	Happens when the communicator does NOT see the LAN network.
Ethernet Network Restore	Happens when the communicator sees the LAN network.

Table 11 – Description of events handled by communicator.

a. *A denial-of-service attack (DoS attack) is a cyber-attack where the perpetrator seeks to make a machine or network resource unavailable to its intended users by temporarily or indefinitely disrupting services of a host connected to the Internet.*

The installer can choose which protocol to use: Contact ID or SIA.

☞ *The selected protocol is also applied to events generated by the panel and sent to the phone numbers with the* ***IP Receiver on GSM Path*** *option enabled (see table on page 46).*

To each event associated with the communicator's inputs, a specific **Customer code** can be assigned, while status events can be assigned a unique user code.

The communicator handles a queue of 32 internal events. When the queue is full, further events are ignored.

The priority between internal and external events can be programmed by the installer (see "Priorities" on page 50).

For internal events, the times and manners in which they are sent are handled by the communicators: after a message is sent, the unit waits for at most 1.25 seconds for the receiver to acknowledge reception (ACK). The unit will try to send a message up to 4 times.

The communicator can choose its primary channel (the factory setting is PSTN). It supplies the line and ringtone voltage for incoming calls and decodes dial tones (DTMF). The simulated PSTN line provides a backup for the burglar alarm panel or other terminal should the main PSTN line fail. Calls CANNOT be switched between PSTN and cellular, or vice-versa, while they are in progress. Operating priority (as programmed) determines how the communicator handles SMS and voice messages, and calls with devices connected to terminals **LI** (for example, a burglar alarm panel).

☞ *The communicator is NOT able to decode pulse dialing.*
To prevent undesired use of the simulated line via cellular, the device generates a double beep during voice calls. It does so after 5 minutes and every 30 seconds thereafter.

PSTN channel

If the voltage on the PSTN terminals (**LE**) falls below 2.5 Vdc (± 20%) for 10 to 3600 seconds (programmable value), the devices connected to terminals **LI** are switched to the cellular network. When PSTN service is restored, the communicator switches back to the PSTN line, again after a programmable delay.

☞ *It is possible to force communications to the cellular data network, even when PSTN is present, by entering a programmable prefix (factory setting "9999") ahead of the phone number dialled by the panel (for further details, see **Dialing Prefix** in "PSTN/PTM" on page 71).*
If the device is on the simulated PSTN line for any reason, the prefix is deleted from the number (if present).

Number dialled by panel	Phone line	Number with **IP Receiver on GSM Path** enabled	Effect
0123456789	PSTN	None	PSTN voice call to 0123456789.
99990123456789	PSTN	0123456789	Contact ID call on cellular data network.
99990123456789	PSTN	None	Voice or Contact ID call on cellular channel to 0123456789.
99990123456789	Simulated PSTN	0123456789	Contact ID call on cellular data network.
99990123456789	Simulated PSTN	None	Voice or Contact ID call on cellular channel to 0123456789.

☞ *The communicator makes independent calls only on the cellular channel, and not on the PSTN line. All communications made on the external PSTN line (terminals **LE**) come from the line connected to terminals **LI**, and are not modified. It follows that the PSTN line connected to **LE** is **not** considered a communications channel pursuant to EN 50136.*

Cellular channel

This provides the devices connected to the **LI** terminals with a simulated PSTN line if cellular reception is detected. If there is no cellular coverage, it switches to PSTN.

Ethernet channel

If the communicator's Ethernet interface is connected to a LAN or WAN you can:

- decode the digital messages, coming from the control panel connected to the communicator, and forward them to an IP receiver, over Internet;
- send the communicator's digital messages to an IP receiver, over Internet;
- downloading and uploading the communicator's options locally via LAN and remotely via WAN.

Contact ID and SIA transmission sequence on cellular and Ethernet channel

If the PSTN is missing, or the PTM (Panel Transmission Monitoring) is enabled (see "PSTN/PTM" on page 71), the communicator may forward the Contact ID and SIA messages of the control panel connected to the **LI** terminals of the communicator, to the PSTN receivers, over the cellular channel, or to IP receiver, over the cellular or Ethernet channel, if **CID/SIA Event Conversion** is enabled (see "Phonebook" on page 46).

1. When an event occurs, the control panel engages the phone line: the communicator simulates the dial tone.
2. The control panel dials the number of the PSTN receiver: make sure that the control panel inserts at least a 1 second pause or checks for the dial tone before dialling the number.
3. The communicator sends the handshake tone required for Contact ID or SIA.
4. The control panel transmits the message after it has received the handshake.
5. The communicator forwards the message over the cellular channel to the PSTN receivers or, if enabled, it decodes and transforms the message into a data packet and sends it to the IP receivers via the cellular or Ethernet channel.
6. The receiver recognises the message and sends an acknowledgement (kiss-off) to the communicator, which forwards the kiss-off signal to the control panel.
7. After the communicator has generated the kiss-off signal, if no other messages are to be sent, the control panel hangs up, otherwise sends the next event.

SMS message transmission

The communicator may send SMS messages (max. length 70 characters) to previously programmed numbers (up to 8 of the numbers in the communicator's phonebook) when the events listed in table 11 on page 28 occur and end.

☞ *A SMS is sent when one of the event listed in table 11 on page 28 occurs, for which an SMS has been programmed and at least one number has been assigned.*

Voice message transmission

The communicator may send up to 3 pre-recorded voice messages to previously programmed numbers (up to 8 of the numbers in the communicator's phonebook) when the events listed in table 11 on page 28 occur and end. Up to 150 voice messages can be recorded, of up to 6 seconds each.

A voice call is made when an event occurs for which a voice message has been programmed and which has at least one phone number. In this case, the communicator executes the procedure indicated below.

1. The communicator dials the number and makes the call via the PSTN channel, or via the cellular channel if the PSTN line is missing.
2. The communicator checks that the number is not engaged and that there are no problems with the cellular network, if the PSTN line is missing, before proceeding, otherwise it terminates the call and tries step 1 again, for the programmed number of times (**Repeat Call** in par. "Communicator Options" on page 62), after which it concludes the call cycle. If the event has been programmed to call multiple numbers, they are called in sequence. This prevents the system calling an occupied number several times in a few seconds.
3. The communicator waits up to 60 seconds for the called number to answer. If the number answers, it goes to step 4, otherwise it hangs up and tries step 1 again, for the programmed number of times (**Repeat Call** in par. "Communicator Options" on page 62), after which it concludes the call cycle.
4. The communicator plays the message for the event: the call is terminated only after the message has been received, or the called user presses ⊡ on his phone, if the **Call Confirmation** option is enabled (see "Communicator Options" on page 62).

If multiple events requiring different messages to be sent to the same number have occurred, the messages are played in sequence, each for the programmed number of **Repetitions** (see "Communicator Options" on page 62), during a single call, to avoid calling the same number multiple times.

If, at the end of the call cycle, the event which activated the communicator is still active, the above procedure is not repeated. The event which tripped the call cycle must first restore before a new cycle of calls is tripped.

Priority handling

Table 12 lists the actions that the communicator can perform and their priority at default.

The priorities of the communicator's actions can be set on the console (see "Priorities" on page 50).

Action	Priority	Programmable on the console
Sending the confirmation ring for communicator's output activation.	1	Yes
Sending communicator's Contact ID or SIA messages to PSTN receivers via cellular channel.	2	Yes
Sending communicator's voice messages via cellular channel.	3	Yes
Sending communicator's SMS messages via cellular channel.	4	Yes
Sending communicator's Contact ID or SIA messages to IP receivers via cellular or Ethernet channel.	5	Yes
Sending communicator's notifications to the app.	6	Yes
Forwarding voice, Contact ID, or SIA messages of the control panel connected to **LI** terminals, on the cellular or Ethernet channel.	7	Yes
Handle incoming SMS.	8	No
Supervision over the cellular data network.	9	No

Table 12 – Action priorities - factory settings.

Notes

- If the communicator is performing an action and another action of higher priority presents, the communicator interrupts the lower priority action and queues it.
- After the higher priority action has been completed, the communicator tries again to perform the interrupted (queued) action.
- If several actions of the same priority occur together, they are queued and performed in sequence.
- If communicator's voice messages have lower priority than panel messages, when a panel message presents while the communicator is transmitting a voice message, the communicator hangs up and the panel takes over the line (pick up detected); after the panel's message has been completed (hang up detected) the communicator tries again to transmit the interrupted (queued) message.
- If the communicator's voice messages have higher priority and a panel event occurs while a communicator voice message is being sent, the communicator must provide the engaged signal to the panel and continue transmitting its messages.
- Communicator SMS have lower priority than control panel actions and the communicator's voice messages, but an SMS cannot be interrupted while it is being sent.
- The lowest priority is given to data packet transmission for supervision of communications with the IP receivers.

Pay as you go balance check

If programmed on the Console (see “Pay As You Go Balance” on page 51), you can check your balance on the prepaid SIM card. Once enabled, the system can check the pay as you go balance in three ways:

1. On the Console (**Status** page, only via PC-Link or USB connection).
2. By SMS to request a response to the sender's number. The command must include the normal user PIN.
3. An SMS containing the service provider's pay as you go balance information is periodically sent to the **first number in the Phonebook**. For all service providers which support pay as you go balance check with network commands, the query string can entered with the Console.

☞ *At the service provider's discretion, the prepaid SIM card pay as you go balance service may be suspended.*

Panel Transmission Monitoring (PTM)

Constantly controlling communications with the panel (PTM function) enables the communicator to send Contact ID or SIA messages via cellular or Ethernet channel if communications between the panel and the central station via the PSTN line fail. If programmed (on the Console, **PSTN/PTM** page), this function is only enabled when the PSTN line is connected to terminals **LE** and is present.

☞ *Pulse dialing detection is not supported.*
When the PTM function activates, the PSTN fault event occurs.

The communicator checks the LE line and, once it has detected that the line is occupied by the panel, executes the following procedure:

- it decodes the dialled number (DTMF);
- if the decoded number has PTM enabled, the communicator check for the Kiss-Off signal (it acknowledges the reception of the event sent from the panel to the central station).

The panel must make the call immediately: the time between picking up and making the call, programmed on the panel, must be at least 2 seconds.

If the **PTM All Numbers** option is enabled (see "PSTN/PTM" on page 71) the communicator will check for the kiss-off for all calls.

Activating outputs

The communicator has terminals (T1, T2, T3, T4, T5 and T6) which can be programmed as inputs or outputs. The outputs can be activated automatically, when certain programmed events occur (see "Inputs/Outputs" on page 55), or remotely, by sending SMS message to the communicator, by caller recognition from preprogrammed numbers (see "Phonebook" on page 46), or by the a mobile device running the **ConnectAlarm** app (see "App Type Output" on page 57).

Remote output activation/deactivation

☞ *The cellular or Ethernet connection must be present for the outputs to be remotely activated or deactivated.*
*To enable this function, the output must be configured as a **Reserved Output**.*
*When terminals **T1**, **T2**, **T3**, **T4**, **T5** and **T6** are programmed as outputs, they may be controlled remotely via SMS and Caller ID.*
The SMS is never saved to the device, but is deleted as soon as the command has been executed.
The number used to activate the outputs using Caller ID must NOT be concealed (it must NOT be a private number).
*To avoid calls being forwarded to devices connected to terminals **LI**, we recommend the communicator is programmed with the **Black List Enabled** enabled (**Options** > **Dial Options**) and **White list** disabled (**Phonebook**) for the numbers you wish to use for this function, calls will be rejected in this way.*

The Open-Collector outputs can be programmed as **Bistable** or **Monostable**:

- **Bistable** outputs are activated/deactivated with two separate commands;
- **Monostable** outputs stay active for the programmed **Monostable Time On**, after which they return to standby, or until they are deactivated by SMS.

Each output can be programmed to return a confirm signal:

- a previously programmed SMS, if the output was activated/deactivated via SMS;
- a confirm ringtone, if Caller ID was used.

☞ *If Caller ID is used, the call hangs up automatically 12 seconds after the output is activated.*
*For further details on the **Control String** and **User Code** options used in the following paragraphs, refer to paragraphs "Inputs/Outputs" on page 55 and "Options" on page 49.*

Bistable outputs

Open Collector outputs configured to be bistable may be activated in two ways:

1. By sending an SMS consisting of the pound (#), the User Code, the **Control String** (**Control String** can not have initial blank spaces) and the characters **=ON***, as follows:

   *#User Code***Control String=ON** (example: #123456*HOMELIGHT=**ON***)*

2. Using Caller ID: in this case, the output is activated without charge, since once the device has recognised the caller, it activates the output without accepting the call.

☞ *An OC output configured as bistable can ONLY be deactivated by an SMS composed of the pound (#), the User Code, the **Control String** and the characters **=OFF*** using the following syntax:*

*#User Code***Control String=OFF*** (example: #123456*HOMELIGHT=**OFF***)*

☞ *The 6 digit user code is factory set to 000000; to replace it, see "Changing the user code" on page 37.*

Monostable outputs

OC outputs configured as monostable can be activated in 2 ways: by SMS and using Caller ID.

SMS

Send an SMS composed of the pound (#), the User Code, the **Control String** (**Control String** can not have initial blank spaces) and by the characters **=ON***, **=ON*TonU*** or **=OFF*** using the following syntax:

*#User Code****Control String=ON****

*#User Code****Control String=ON*TonU****

*#User Code****Control String=OFF****

The **=ON*TonU*** parameter sets the ON time from 1 to 86400 seconds, with a resolution of 1 second. The ON Time can be set by means of the Communicator's Console software. **Ton** is the required value and **U** is the unit in hours (**H**), minutes (**M**) and seconds (**S**), as shown in the following example:

SMS Example	Effect
#123456*HOMELIGHT=**ON***	Bistable activation.
#123456*HOMELIGHT=**ON****	Activated as programmed.
#123456*HOMELIGHT=**ON***3600**S***	Active for 3600 seconds.
#123456*HOMELIGHT=**ON***50**M***	Active for 50 minutes.
#123456*HOMELIGHT=**ON***3600*	Activated as programmed, the invalid ON time parameter is ignored.
#123456*HOMELIGHT=**ON***000**S***	Activated as programmed, the invalid ON time parameter is ignored.
#123456*HOMELIGHT=**OFF***	Deactivated.

☞ *To activate the output with an SMS using the programmed settings, remove the parameter **TonU** and leave the characters *******.
*(Example: #9876*HOMELIGHT=***ON*****).*
*If the monostable output is programmed incorrectly, the output will be activated for the **Monostable Time On** set in the Console.*

Caller ID

The output is activated free of charge, since after it has recognised the caller, the device activates the output without answering the call.

☞ *Monostable outputs return to standby after the programmed **Monostable Time On**.*
*The **Monostable Time On** can be set from 1 second to 86400 seconds, with a 1 second resolution.*

In addition to the processes described in the paragraph “Remote output activation/deactivation” on page 35, it is also possible to carry out other remote procedures through the transmission of various SMS messages.

Changing the user code

The default user code is 000000; to change it, send an SMS message consisting of the characters **#CUC** followed by the current user code and the new user code between * characters, in accordance with the following formula:

*#**CUC***User code*New user code**

The device will send an SMS to confirm that the user code has changed.

☞ *The new user code must be 6 digits long (0-9).*

Enabling/disabling remote programming

Remote programming allows you to operate the Console over a network. To set the communicator's parameters remotely, you must enable remote programming, either with the Console (see “Network Settings” on page 52), or with an SMS composed of the characters **#ERA** followed by the User Code and **ON** enclosed in * as follows:

*#**ERA***User code*ON**

To disable remote programming, send the following SMS:

*#**ERA***User code*OFF**

The device will confirm with an SMS.

Changing the installer code

The 6-digit installer code is used to access the remote programming interface (see “Installer Authentication” on page 49). The default installer code is 111111; to change it, send an SMS message consisting of the characters **#CIC** followed by the current Installer code and the new Installer code between * characters, in accordance with the following formula:

*#**CIC***Installer code*New installer code**

☞ *The new installer code must be 6 digits long (0-9).*

If the EN50136 option is enabled, the installer must be authorised by the normal user for the installer code change to take effect.

The device will send an SMS to confirm that the installer code has changed.

Changing the level 4 installer code

The default level 4 installer code is 222222; to change it, send an SMS composed of the characters **#CMC** followed by the current Level 4 Installer code and the new Level 4 Installer code enclosed between *, as follows:

*#**CMC***Level 4 installer code*New level 4 installer code**

☞ *The new level 4 installer code must be 6 digits long (0-9).*

For the Level 4 installer code change to take effect, the Level 4 installer must be authorised by the installer.

The device will send an SMS to confirm that the level 4 installer code has changed.

Pay as you go balance check

To check your pay as you go balance with an SMS, you can either use the Console (see "Pay As You Go Balance" on page 51) or send an SMS composed of the characters #**CCC** followed by * and the user code, as follows:

*#**CCC***User code**

or #**ICCC** followed by * and the installer code, as follows:

*#**ICCC***Installer code**

☞ *You will receive an SMS with the pay as you go balance.*
At the mobile service provider's discretion, the prepaid SIM card pay as you go balance service may be suspended.
If the EN50136 option is enabled, the installer must be authorised by the normal user for the command to work.

Checking the expiration date

To find out the expiration date of the SIM card with an SMS, send an SMS composed of the characters #**EDC** followed by * and user code, as follows:

*#**EDC***User code**

You will receive an SMS with the expiration date.

Updating the expiration date

To update the SIM card's expiration date with an SMS, send an SMS composed of the characters #**EDU** followed by *, the user code and the new date, as follows:

*#**EDU***User code*new date**

The date must have the format *DD/MM/YYYY*.

☞ *If an expiration date has NEVER been set on the Console, the expiration time is set to 10:00 AM.*
*If a date and time of expiration have been set with the Console and you then change the expiration date with an SMS using the command #**EDU**, the expiration time is unchanged.*

Checking the serial number

This command is used to check the communicator's serial number with an SMS composed of the characters #**RID** followed by * and the user code, as follows:

*#**RID***User code**

or #**IRID** followed by * and the installer code, as follows:

*#**IRID***Installer code**

The device will respond with the ***RID***: *01234567*.

Enabling the installer

To enable the installer to work with the device, the user must send a SMS composed of #**ENI** followed by the User code as follows:

*#**ENI***User code**

The device will confirm with an SMS.

☞ *The installer must be enabled only if the EN 50136 option is enabled; if not, the installer is always enabled.*

Disabling the installer

To disable the installer from working with the device, the user must send a SMS composed of #**DSI** followed by the User code as follows:

*#**DSI***User code**

The device will confirm with an SMS.

☞ *The installer is disabled automatically 12 hours after being enabled.*
Disabling the installer also automatically disables the level 4 installer.

Enabling the level 4 installer

To enable the level 4 installer to work with the device, the installer must send a SMS composed of #**ENM** followed by the **Installer code** as follows:

*#**ENM***Installer code**

The device will confirm with an SMS.

The level 4 installer is automatically disabled after 12 hours.

Start a remote session

To start a remote communicator session, send an SMS composed of #**SRS** followed by the Console IP and the Console port between *, as follows:

*#**SRS***Console IP* Console port**

where:

- the Console IP if the public IP of the PC in the format "AAA.BBB.CCC.DDD" (e.g. 37.207.123.181) or host/domain name format (Fully Qualified Domain Name, e.g. "my_name.dyndns.org");
- the Console port is the IP port in the format "NNNNN" (a 5 digit number in the range 1 to 65535).

☞ *You must set the router to which the Console's PC is connected to enable port forwarding from the Console port to TCP port 51004 (the port used locally by the Console, this is NOT editable): ask your network administrator or refer to the router's instructions.*

The APN specified in the Console **Network Settings** page will be used, or the one programmed for Receiver 1 (**IP Receivers** page).

If no APN has been programmed (neither in the **Network Settings** page nor in the **IP Receivers** page), the SMS must specify the connection as follows:

*#**SRS***Console IP*Console port*APN access point name**

In some cases, if the APN USERNAME (max 32 characters) and PASSWORD (max 32 characters) are set, the above string is sufficient to initiate a session, otherwise the string must be modified as follows:

*#**SRS***Console IP*Console port*APN access point name*User name*Password**

Changing the account number for the cellular receiver

To change the account number sent to the cellular receiver, send an SMS composed of #**ACNC** followed by the Installer Code and the Account number between *, as follow:

*#**ACNC***Installer code*Account number**

where:

- the Account number is a maximum of 10 digits.

Changing the account number for the Ethernet receiver

To change the account number sent to the Ethernet receiver, send an SMS composed of #**ACNE** followed by the Installer Code and the Account number between *, as follow:

*#**ACNE***Installer code*Account number**

where:

the Account number is a maximum of 10 digits.

ConnectAlarm app

Using the **ConnectAlarm** app on an Andorid/iOS mobile device, you can:

- Activate or deactivate the communicator's outputs (see "App Type Output" on page 57);
- Display the status of the communicator's input (see "App Type Input" on page 58);
- Display text messages when the communicator's events occur and end (see **SMS / Push Notifications** in "Inputs and Events" on page 63);
- Display the Contact ID messages from the communicator (see **Central Station Calls** in "Inputs and Events" on page 63);
- Display text messages for Contact ID and SIA messages of control panel connected to the communicator's **LI** terminals (see **SMS / Push Notifications** in "CID/SIA Converter" on page 64);
- Display the Contact ID messages from the control panel connected to the communicator's **LI** terminals (see **All CID Events to App Server** in "App Server" on page 53).

☞ *The app deletes all event notifications related to a class (alarm, tamper, fault) when an event of that class restores. You can see active events through the button for event display.*

Setting up the **ConnectAlarm** app

1. On your mobile device, download the **ConnectAlarm** app from Play Store or Apple Store.
2. Open the **ConnectAlarm** app: the first time you open the **ConnectAlarm** app you must read and accept the **End User License Agreement** and the **Privacy Notice**.
3. Enter the **Server Address**, connect.tycomonitor.com, and click **OK**.
4. Click **Sign up**.
5. Enter a valid **E-mail** address and click **SIGN UP**.
6. Enter the **E-mail code** you received at the e-mail address you have entered in previous step and click **PROCEED**.
7. Enter the password for your account and click **PROCEED**.
8. In the **Panel name** option, enter a name for the system where the communicator is part.
9. In the **Panel Serial** option, enter the communicator serial number on the communicator electronic board.
10. In the **Master User Code** option, enter the communicator's user code (see **Options** > **User Authentication** > **User Code** in the console): default, 000000.
11. Click **CONNECT**.
12. In the **PANELS LIST**, select the system you have had just added.
13. Enter the communicator's user code (see **Options** > **User Authentication** > **User Code** in the console) and click **PROCEED**: default 000000.

At this point the end user can manage the system, according to the installer setup.

PC PROGRAMMING

You can program the communicator using the latest DLS 5 console software that you can download from *www.dsc.com.*

☞ *To install and run the console, you must have admin rights on the PC; we also recommend that you check the firewall settings if you encounter problems during the installation procedure.*

Proceed as outlined below.

1. Install the console.
2. Run the console.
3. Select the user name and enter the password to enter the session: the factory setting uses the username admin and the password is 1234.
4. Open the **File** menu and click on **New Account** to create a new account or open an account listed in the **Start Page**: double click on the account to open it.
5. Setup the options (refer to the respective paragraphs for instructions).
6. Download the options to the communicator (refer to "Downloading and Uploading" on page 76).

☞ *To change the console's language, click on **Tools** > **Edit Current User**; select the language on the next page.*

Description of the menus

- ❑ **File** menu
- ➢ **New Account**: Creates a new account and assigns the factory settings to all parameters.
- ➢ **Account Group Maintenance**: groups several accounts into a group.
- ➢ **Recent Files**: selects an existing account.
- ➢ **Exit**: Exits the program. You will be prompted to save any changes made to the current installation.
- ❑ **View** menu
- ➢ **Start Page**: equivalent to clicking on the **Start Page** tab.
- ➢ **Toolbar**: opens the **Account Group Maintenance** field.
- ➢ **Operators Online**: list of connected users.
- ➢ **Open Accounts**: list of saved accounts.
- ➢ **Communication Jobs**: lists the communication sessions; you can also click on .
- ➢ **Recent Activity**: list of recent activity.
- ❑ **Tools** menu
- ➢ **Language Manager**: modifies, imports/exports, creates new languages.
- ➢ **DLS 5 v1.50 Operator Maintenance**: in this window, the administrator can modify his password and set the password for a user (with possible functional restrictions—**Edit Operator Roles**) for the Console.
- ➢ **Modem Manager Configuration**: sets the type of connection: PCLINK or COM port.
- ➢ **Edit Current Operator**: see previous page for changing the Console language.
- ➢ **Backup/Restore Database**: sets the database management options.
- ➢ **Recycle Bin**: select the account and delete it.
- ❑ **Window** menu
- ➢ **Close All Tabs**: closes all open account tabs.
- ➢ **Start Page**: equivalent to clicking on the **Start Page** tab.
- ❑ **Help** menu
- ➢ **About** DLS: displays the Console version.
- ➢ **End User License Agreement**: displays the text of the license agreement.
- ➢ **Updates**: **Check For Updates—Show Installed Updates—Manually Install Update**.
- ➢ **Send Feedback**: send a comment to the manufacturer

Description of icons

Global Upload: displays the communicator's settings on the PC.

Global Download: once a new account has been programmed (or an existing account has been modified), sends the new settings to the communicator.

Save: if you change the settings for the existing account, click on **Save** to save the new configuration.

Connect Only.

Communicate Tags.

Upload Event Log.

Clear all tags.

Disconnect When Complete.

Programming/Audio Import/Export.

Select User: displays only information relating to the **Normal User**, **Installer** or **Level4 Installer**.

Option Name Search: enter the name of the option to the left of the icon.

Icons present on all programming pages.

Clear all tags for this group.

Export.

Restore all options to default.

Restore all options to original.

Tag all for upload: select all page options for upload.

Tag all for download: select all page options for download.

The following pages are available in the programming section.

Phonebook: the phonebook page.

Options: options page.

Firmware Update: the icon only displays when the **Level 4 Installer** is enabled and is updating the firmware in this page (see icon **Select User**).

Network Settings: connection settings page

Inputs/Outputs: programs the communicator's inputs and outputs.

Communicator: communicator programming page.

IP Receivers: programs all IP receiver options.

Voice Messages: voice message management page.

PSTN/PTM: configures the PTM function.

Event Log: configures the event buffer.

Status: communicator monitoring page.

If you wish to configure a new account, go to **File** > **New Account**.

To display the list of accounts in the database, select **View** > **Start Page** or click on **Start Page**. In this section you can delete or recall the configuration for a given account as follows:

1. Right click on the account name.
2. Select **Open** to load the data from the database or **Delete** to delete the account and all its settings from the database.

To load an account, you can simply double-click on the account name.

You can also order the list alphabetically or by code by clicking on the header of the column in question.

All settings are available on the following pages. This chapter describes in detail the application's pages.

☞ *Depending on your level of access (Normal User, Installer or Level 4 Installer) the settings pages will display differently.*

Programming/Audio Import/Export

Button opens a window with the following functions.

Export Programming: click on this button to export the current settings from the Console to a USB key.

Import Programming: click on this button to import a communicator's settings from a USB key to the Console; the settings may be those previously exported from a Console running on another PC, or from a communicator.

Export Audio: click on this button to export the voice messages from the Console to a USB key.

Import Audio: click on this button to import the voice messages from a USB key to the Console; the messages may be those previously exported from a Console running on another PC, or from a communicator.

Restore Factory Settings

To restore the communicator's factory settings, proceed as follows.

1. Shut off power to the communicator.
2. Short pins 1 and 4 of the PC LINK 15 connector and restore power.
3. All LEDs will turn on, and after a few seconds the green ones will turn off to indicate that the factory restore is in progress.
4. You can now remove the short connection between pins 1 and 4 of connector 15.
5. Once the procedure terminates, the LEDs ⚠ will flash to indicate that the PINs have been restored to their values; the other LEDs remain off.

☞ *Recorded voice messages are NOT deleted by the factory restore procedure. Voice messages can be deleted in the Console's Voice Messages page.*
The factory restore procedure may NOT be executed if the communicator is ONLY powered by its backup battery; you must reconnect its primary power supply.

Phonebook

You can save up to 32 phone numbers in this page.

☞ *If the periodic pay as you go balance function has been programmed for the communicator's SIM card (see the* **Options** *page) the answering SMS is sent to phone number #1.*

- ❑ **Label**: enter an alphanumeric string of at most 16 characters.
- ❑ **Phone Number**: enter a phone number with the international dialing prefix in the format "+xxx" (e.g.: +39 for Italy). Up to 16 digits at most are allowed (the "+" counts as a character).

☞ *The numbers in the phonebook are used to activate outputs, for the SMS communicator, the voice communicator, the IP receiver and for PTM (Panel Transmission Monitoring).*

- ❑ **White List**: if **Black List Enabled** option is enabled (see **Options** > **Dialing Options**) the communicator will forward to devices connected to terminals **LI** (e.g. a burglar alarm panel or a telephone set) the calls coming from numbers with this option enabled and will block calls coming from all other numbers, as explained by the following table.

Black List Enabled	White List	Operating Mode
Disabled	Disabled	Incoming calls from any number are forwarded to **LI**.
Disabled	Enabled	Incoming calls from any number are forwarded to **LI**.
Enabled	Disabled	Incoming calls from any number are blocked.
Enabled	Enabled	ONLY incoming calls from numbers with **White List** option enabled are forwarded to **LI**; incoming calls from any other number blocked.

☞ *This option affects ONLY calls over cellular channel; incoming calls to communicator's terminals* ***LE*** *are ALWAYS forwarded to terminals* ***LI****.*

☞ *Numbers having the* ***White List*** *option enabled must have Caller ID enabled otherwise the communicator blocks the call.*

- ❑ **Activate Output**: click on **[+]** to select the outputs (1 = T1, 2 = T2, 3 = T3, 4 = T4, 5 = T5 and 6 = T6) to activate when the communicator receives a call from the number in question. This function is independent of the **White List** and **Black List Enabled** settings in **Options** > **Dialing Options**. To activate the output, Caller ID must be enabled, for the number in question.

☞ *To activate the output, set terminal T1, T2, T3, T4, T5 or T6 as* ***Output*** *and enable* ***Reserved Output*** *option* (see ***Inputs/ Outputs*** *page).*

- ❑ **Output Activation Confirmation**: check this box to receive a ring tone to confirm activation of the output.

☞ *The ringtone will sound 1 minute after the output has been activated.*
If the communicator is busy with another operation (for example, the cellular channel is busy with voice communications), the ringtone will not be sent.

- ❑ **PTM**: enable this options to activate the "PTM" function for the number in question. Use this option to monitor the panel's calls to a PSTN receiver's number (central station). Factory setting: disabled.
- ❑ **CID/SIA Event Conversion**: enables sending of messages by voice or SMS, by decoding the panel's CID/SIA packets (see table 13 on page 47).

- **Virtual Receiver on GSM Path**: if **CID/SIA Event Conversion** is enabled and the option **IP Receiver on GSM Path** is disabled, this function forces the communicator to simulate a receiver (the communicator sends a handshake and kissoff to the panel).
- **IP Receiver on GSM Path**: enables decoding of events transmitted by the panel to the phone number and the transmission of events on the cellular network to IP receivers (central station).

Channel[1]	**Communication protocol[2]**	**CID/SIA Event Conversion**	**Virtual Receiver on GSM Path**	**IP Receiver on GSM Path**	Effects
PSTN	No effect	Disabled	No effect	No effect	The panel's voice and digital messages (SIA and CID) are forwarded to PSTN.
PSTN	**SIA / Contact ID**	Enabled	No effect	No effect	The panel's voice and digital messages are forwarded to PSTN. The digital messages are converted to voice or SMS messages (as set in the **Communicator > CID/SIA Converter** page) and forwarded on cellular channel[3].
Cellular	No effect	Disabled	Disabled	Disabled	The panel's voice messages are forwarded on cellular channel[4].
Cellular	**Contact ID**	Enabled	Disabled	Disabled	The panel's voice and digital messages (CID) are forwarded on cellular channel[4]. The digital messages (CID) are converted to voice or SMS messages (as set in the **Communicator > CID/SIA Converter** page) and forwarded on cellular channel[3].
Cellular	**SIA / Contact ID**	Enabled	Enabled	Disabled	The digital messages (CID or SIA) are converted to voice or SMS messages (as set in the **Communicator > CID/SIA Converter** page) and forwarded on cellular channel[3]. The communicator simulates a receiver by supplying the handshake and kissoff messages.
Cellular or Ethernet	**SIA / Contact ID**	Disabled	Disabled	Enabled	The digital messages (CID or SIA) are decoded and forwarded on the cellular or Ethernet channel to the IP receivers. The communicator simulates a receiver by supplying the handshake and kissoff messages.

Table 13 – Effects of the **CID/SIA Event Conversion**, **Virtual Receiver on GSM Path** and **IP Receiver on GSM Path** *options on the communicator's operation.*

1) Refers to the communications channel used by the communicator.

*2) See the **Options** page.*

3) Only if the panel's communications protocol is compatible with that of the communicator.

4) SIA and CID messages may NOT be understood by the receivers due to distortion on the cellular network.

Channel[1]	**Communication protocol**[2]	**CID/SIA Event Conversion**	**Virtual Receiver on GSM Path**	**IP Receiver on GSM Path**	Effects
Cellular or Ethernet	**SIA / Contact ID**	Enabled	Disabled	Enabled	The digital messages (CID or SIA) are decoded and forwarded on the cellular or Ethernet channel to the IP receivers. The communicator simulates a receiver by supplying the handshake and kissoff messages. The digital messages (CID or SIA) are converted to voice or SMS messages (as set in the **Communicator > CID/SIA Converter** page) and forwarded on cellular channel[3].

Table 13 – Effects of the **CID/SIA Event Conversion**, **Virtual Receiver on GSM Path** and **IP Receiver on GSM Path** *options on the communicator's operation.*

1) Refers to the communications channel used by the communicator.

2) See the ***Options*** *page.*

3) Only if the panel's communications protocol is compatible with that of the communicator.

4) SIA and CID messages may NOT be understood by the receivers due to distortion on the cellular network.

☞ *The **Options** page differs depending on the user's access level: normal user, installer, level 4 installer.*

User Authentication

- ❑ **Installer Code Enabled**: the normal user uses this option to enable the installer for programming the communicator.

☞ *The installer need only be enabled if the **EN50136** option is enabled.*
The installer is disabled automatically 12 hours after being enabled.
Disabling the installer also automatically disables the level 4 installer.

- ❑ **User Code**: enter the normal user code here (at most 6 digits), for use, among others, in remotely activating the outputs. Factory setting: 000000.

Installer Authentication

- ❑ **Installer Code**: enter the installer code here (6 digits). Factory setting: 111111.
- ❑ **Level 4 Installer Code Enabled**: the installer can enable the level 4 installer code for communicator firmware updates here.

☞ *This option is disabled if the **EN50136** option is disabled.*

- ❑ **EN50136**: the installer can enable/disable the **EN50136** option in this box.

☞ *To ensure conformity with EN 50136-2, the **EN50136** option should NOT be disabled.*

Level 4 Installer Authentication

- ❑ **Level 4 Installer Code**: enter the level 4 installer code here (6 digits). This code gives access to firmware updates and **Status** page display. Factory setting: 222222.

Dialing Options

This section configures certain aspects of the phone numbers.

- ❑ **Dial Prefix**: the number entered in this box is placed before any number dialled by the communicator over the cellular channel. Enter the prefix (1 to 8 digits) or leave the field empty, if unused.
- ❑ **Digits to Remove**: if the communicator is connected to a phone switchboard, the phone numbers (programmed in the panel) must be preceded by the switchboard number (normally a single digit). Since the switchboard number is not necessary when calls are made to the GSM network, it must be removed from the number. Enter the number of digits that form the switchboard number (e.g. if switchboard number is 01, enter 2 in the **Digits to Remove** option, as 2 numbers form the switchboard number).

☞ *The phone number must have at least two digits more than the number entered in **Digits to Remove**, otherwise the engaged tone is generated.*

Example:

1. Set the **Dial Prefix** = 9999 and set **Digits to Remove** to 2 on the communicator.
2. Configure a voice call on the panel using the number 9999011234567890.
3. Activate the call on the panel.

4. The communicator will send the call to the number 1234567890.

☞ *If the **Digits to Remove** option is enabled and the panel calls a number which has **CID/SIA Event Conversion** enabled (see **Phonebook**), the phone number in the phonebook must match the one programmed on the panel (including prefix), in order for the communicator to convert it.*

- **Black List Enabled**: if enabled, the communicator forwards to devices connected to terminals **LI**, the calls coming from telephone numbers with **White List** option is enabled ONLY (see "Phonebook" on page 46).

☞ *This option affect ONLY calls over the cellular channel; incoming calls to communicator's terminals **LE** are ALWAYS forwarded to terminals **LI**.*

☞ *The **Black List** function COMBINED with **Activate Output** on Caller ID delays call refusal by a few seconds. The confirmation ring tone associated with **Activate Output** on Caller ID delays call refusal by a few seconds. If the call is refused immediately, the output has not been activated.*

- **Tones**: select the country of Communicator installation; the selected country will set adequately a series of parameters for the proper working of the simulated telephone line.
- **Roaming Enabled**: enables the communicator to connect to another mobile service provider when that of communicator's SIM is not available.

☞ *Additional charges may apply.*

Priorities

This options allows you to configure the communicator's actions priority.

- **Dialer / LI Priority**: defines the priority of the communicator actions (see **Dialer Events Priority**) and the LI (messages transmitted by devices connected to the **LI** terminals, such as a burglar alarm panel).

Factory setting: **Dialer High, LI low**.

- **Dialer Events Priority**: set the priority for the communicator's actions described as follow.
  - **Digital Calls**: Sending the communicator's Contact ID or SIA messages to PSTN receivers via cellular channel.
  - **Push Application**: Sending the communicator's notifications to the app.
  - **Ring**: Sending the confirmation ring for communicator's output activation.
  - **Rx**: Sending the communicator's Contact ID or SIA messages to IP receivers via cellular or Ethernet channel.
  - **SMS**: Sending the communicator's SMS messages via cellular channel.
  - **Voice Calls**: the Sending communicator's voice messages via cellular channel.

Factory setting: **1:Ring; 2:Digital Calls; 3:Voice Calls; 4:SMS; 5:Rx; 6:Push Application**.

Generic

This section sets the loudness of the communicator's speaker and microphone.

- **Speaker Volume**: set the communicator's speaker volume: change this setting if the panel connected to terminals LI of the communicator is unable to decode the DTMF commands.
- **Microphone Volume**: set the communicator's microphone volume: change this setting if the user is unable to understand the voice messages sent by the panel connected to terminals LI of the communicator or by the communicator itself.

☞ *A high microphone volume setting can corrupt the DTMF tones from devices connected to terminals **LI**, and make them incomprehensible.*

- **Enable Antenna Cut Detection**: if enabled, the **Antenna Fault** event is tripped when the antenna is not present or in short circuit.

- **Enable Battery Detection**: if enabled, the **Battery Fault** event is tripped when battery faults are detected.

Automatic Clock Adjust

The options of this section is for the automatic synchronisation of the communicator's clock.

- **SIM Phone Number**: enter the phone number of the SIM card in the communicator (up to 16 digits).
- **Auto SMS**: if enabled, the communicator updates the system date and time by sending an SMS to the number specified in the **SIM Phone Number** option. Factory setting: enabled.
- **IP Clock Adjust**: if enabled, the communicator gets the date and time from the IP receiver 1, when configured and connected. Factory setting: enabled.

☞ *In order to ensure compliance with EN 50136-2, the **Auto SMS** and **IP Clock Adjust** options must be enabled.*

Pay As You Go Balance

☞ *At the service provider's discretion, the prepaid SIM card pay as you go balance service may be suspended.*

This section configures the system so that an SMS containing the service provider's pay as you go balance information is periodically sent to the first number in the Phonebook. Program the following options for a proper pay as you go balance request, depending on the service provider in question.

☞ *Check with the SIM card provider for the methods and any charges for the available credit request.*

- **Enquiry Type**: select the type of request (**none**, **SMS**, **Call**, **Service Command**).
- **Enquiry Number**: telephone number to call or to which an SMS message should be sent in order to request credit balance information.
- **Balance Message**: string used in the SMS requesting the balance using network commands.
- **Enquiry Interval**: enter the interval within which the periodic SMS is to be sent with the balance information (if handled by the operator). The interval is composed of the following values:
  — **Days**, day of next send—select to send the next periodic SMS. The value runs from 0 to 364;
  — **Hours**, time of next send—select to send the next periodic SMS. The value runs from 0 to 23.

SIM Expiration

- **SIM Expiration Message**: enables sending the SMS (user programmable) with the expiration data to the first number in the phonebook.
- **SIM Expiration Date**: once the expiration date is set, the message is sent 30, 15, 7, 6, 5, 4, 3, 2 and 1 days prior to the expiry date itself. Click on **Now** to set the PC's time.

☞ *The SMS is sent once every programmed day: if it fails, no further attempt is done.*

Protocol Settings

- **Handshake Repetition**: set the number of handshakes generated by the communicator and sent to the panel connected to terminals **LI**. Range: 1 to 4.
- **Communication protocol**: select the protocol: **Contact ID** or **SIA**.

☞ *Depending on this setting, the communicator will decode CID or SIA events from the panel connected to the LI line; the setting must be the same for all numbers handled by the communicator.*
The installer must check that the mobile service operator works reliably with Contact ID on the cellular network, due to issues with transmission quality.

Network Settings

The **Network Settings** page is to setup the communicator for communication via cellular network or via Ethernet, with the console or the app, as indicated following.

- **Device ID**: enter the communicator's serial number you can find on the communicator's electronic board.

Cellular Data

The options in the **Cellular Data** section are to setup the communicator for communication via cellular network.

In order to set up a cellular communication, the user must specify an APN, optionally a user name and password, provided by the network operator, as indicated following.

- **Remote Access**: check this box to enable remote programming.
- **Remote Access APN**: access point name, up to 32 characters. This is generally supplied by the cellular network operator.
- **Remote Access User Name**: some operators require user authentication; enter the user name in this field.
- **Remote Access Password**: enter the password in this field.

☞ *See paragraph "Start a remote session" on page 39.*

Ethernet

The options in the **Ethernet** section are to setup the communicator for communication via Ethernet, as indicated following.

- **Obtain an IP address automatically**: If this option is ENABLED the server or router the communicator is connected to provides the communicator with the information required to connect to the sub-network it is part of: **IP Address**, **Subnet Mask**, **Default Gateway**, **DNS Server Address**.
  If this option is disabled the connection options should be set manually as described in the following sections. Factory setting: enabled.
- **IP Address**: Enter the IP address[1] to be assigned to the communicator: the network administrator will provide this information. Factory setting: 192.168.0.101

☞ *This option is locked if the **Obtain an IP address automatically** option is enabled.*

- **Subnet Mask**: Enter the sub-network mask[2] for the local sub-network: the network administrator will provide this information. Factory setting: 255.255.255.0.

☞ *This option is locked if the **Obtain an IP address automatically** option is enabled.*

- **Default Gateway**: Enter the IP address for the local gateway[3] that will be used by the communicator to connect to a PC outside the LAN (Ethernet): the network administrator will provide this information. Factory setting: 192.168.0.1.

☞ *This option is locked if the **Obtain an IP address automatically** option is enabled.*

---

1. *An Internet protocol (IP) address is a numerical label that uniquely identifies a device (host) connected to a computer network that uses Internet Protocol as a communication protocol. An IP address basically performs two main functions: it identifies a device on the network and consequently provides the path for it to reach another device on the network.*
2. *The sub-network mask indicates the method used to define the given range for a host within an IP sub-network, in order to reduce network traffic and assist in searching for and reaching a determined host with relevant sub-network IP address.*
3. *A gateway is a network device whose main function is to carry network data packets outside to a local network (LAN); the hardware device that implements this task is usually a router.*

- **DNS Server Address**: Enter the IP address for the DNS server: the network administrator will provide this information. Factory setting: 8.8.8.8 (google).

☞ *This option is locked if the **Obtain an IP address automatically** option is enabled.*

- **Ethernet speed configuration**: Select the Ethernet interface speed for the communicator.
  - Automatic (factory setting);
  - 10 Mbps, Half Duplex;
  - 100 Mbps, Half Duplex;
  - 10 Mbps, Full Duplex;
  - 100 Mbps, Full Duplex.

App Server

The options in the **App Server** section are to setup the communicator for communication with the app over the cellular or Ethernet channel, as indicated following.

- **IP address**: This is the IP address of the app server set in factory. Change this IP address if required. It can be numeric or literal value.
- **Ethernet Remote Port**: This is the listening port used by the app server over the Ethernet channel. Change this port only if required by the app server. In any case, it must be different from receivers' remote ports and from **Cellular Remote Port**. Factory setting: 1303.
- **Cellular Remote Port**: This is the listening port used by the app server over the cellular channel. Change this port only if required by the app server. In any case, it must be different from receivers' remote ports and from **Ethernet Remote Port**. Factory setting: 1304.
- **Eth/Cellular Local Outgoing Port**: This is the outgoing port used by the communicator to communicate with the app server. Zero means that the communicator automatically set this value. Enter a fixed value if the local network rules block some outgoing port. If you enter a value different from zero, it must be different from the **Eth/Cellular Local Outgoing Port** set for **DLS**. Factory setting: 0.
- **Channel Priority**: Select the channel used by the communicator for communication with the app server.
  - **Cellular Only**: the communicator uses the cellular channel for communication with the app server.
  - **Ethernet Only**: the communicator uses the Ethernet channel for communication with the app server.
  - **Ethernet Primary, Cellular Backup**: the communicator uses the Ethernet channel for communication with the app server, and the cellular channel when the Ethernet communication is missing.

Factory setting: **Cellular Only**.

- **All CID Events to App Server**: If enabled, all the Contact ID events of the panel connected to the communicator are forwarded to the app. Factory setting: disabled.
- **Ethernet Init encryption key**: This is the encryption key used on the first communication with the app server, on the Ethernet channel. Change this encryption key only if required by the app server. Factory setting: 12345678123456781234567812345678.
- **Cellular Init encryption key**: This is the encryption key used on the first communication with the app server, on the cellular channel. Change this encryption key only if required by the app server. Factory setting: 12345678123456781234567812345678.

DLS

The options in the **DLS** section are to setup the communicator for communication with the console, as indicated following.

- **Ethernet Local Incoming Port**: Enter the incoming port on the communicator for the console connecting as client. Factory setting: 3062.
- **Eth/Cellular Local Outgoing Port**: This is the outgoing port used by the communicator to communicate with the console. Zero means that the communicator automatically set this value. Enter a fixed value if the local network rules block some outgoing port. If you enter a value different from zero, it must be different from the **Eth/Cellular Local Outgoing Port** set for **App Server**. Factory setting: 0.

- **Outgoing Connect. Fallback to Cellular**: if this option is enabled, the communicator tries the connection through cellular network if the Ethernet connection fails. Factory setting: disabled.

Inputs/Outputs

This page is used for setting the input/output modes, the output activation events, their standby polarity (NC or NO), the reserved outputs, and the remote activation SMS strings for the reserved outputs.

- ❑ **Template**: you can set the communicator's inputs and outputs to manage control panels or appliances, through the **ConnectAlarm** app (see "App Type Output" on page 57 and "App Type Input" on page 58). This menu has a list of pre-sets suitable for managing specific control panels.
- ➢ **Custom**: you can set all the inputs and outputs options as required.
- ➢ **PowerSeries**: input and output options are set to manage a PowerSeries control panel.
- ➢ **PowerNeo**: input and output options are set to manage a PowerNeo control panel.
- ➢ **Kyo32G**: input and output options are set to manage the Kyo32G control panel.
- ➢ **Kyo320**: input and output options are set to manage the Kyo320 control panel. The control panel may be connected to the communicator as shown in figure 7.

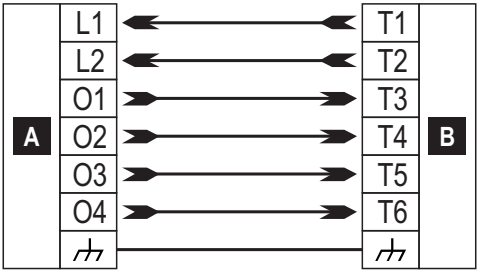

*Figure 7 – Wiring diagram example for managing the Kyo320 control panel through the **ConnectAlarm** app. Note: In your installation, the control panel terminals may be different.*

Callout	Description
A	*Control panel.*
B	*Communicator.*
L1	*Input that arms the control panel when connected to negative.*
L2	*Input that disarm the control panel when connected to negative.*
O1	*Output floating when the control panel is disarmed, connected to negative when the control panel is armed.*
O2	*Output connected to negative when the control panel is in alarm status.*
O3	*Output connected to negative when the control panel is in tamper status.*
O4	*Output connected to negative when the control panel is in fault status.*
⏚	*Negative terminal.*

- ❑ **Input/output**: double click on the input/output number to view the settings.
- ❑ **Label**: enter an alphanumeric string of at most 16 characters.
- ❑ **I/O Type**: in this column you can program terminals T1, T2, T3, T4, T5 and T6 for the following modes:
  — **Input**, select this mode to configure the terminal as an input line;
  — **Output**, select this mode to configure the terminal as an open-collector output;
- ❑ **Polarity**: this option is used to program the output/input standby status:
  — **Normally Closed**: the terminal is grounded (negative) when the input/output is at standby;
  — **Normally Open**: the terminal is floating when the input/output is at standby.

- **Output**: if set as output, double click on **[+]** to display the column relating to the event to program for the output. The check mark indicates that the output in question will be activated when the event occurs. Click on the boxes to check/uncheck them.

☞ *An output returns to standby when all the causes that tripped it are resolved, except for **FTC fault**, in which case it returns to standby after a set delay (ON time).*

☞ *Programming events for an output implies that certain events relating to the output are disabled.*

- **Panel Interconnection Fault**: if selected, the output is activated when the panel is not present.
- **Jamming Detect**: if selected, the output will be activated if the device is subject to radio disturbance (factory setting: terminal **T6**).
- **Antenna Fault**: if selected, the output is activated if the antenna is not present or has limited function (only with ANTLTE-02).
- **Tampers**: if selected, the output will be activated when tampering is detected: opening the cover, removal from the wall (factory setting: terminal **T4** on GS4005/3G4005/TL405LE or **T6** on GS4015).
- **PSTN Fault**: if selected, the output is activated if the external phone line, connected to the **LE** terminals, fails (factory setting: terminal **T1** on GS4005/3G4005/TL405LE or **T4** on GS4015).
- **GSM Fault**: if selected, the output is activated if cellular network coverage fails (factory setting: terminal **T5**).
- **No Cellular Network**: if selected, the output is activated when problems occur with the cellular network connection (factory setting: terminal **T2** on GS4005/3G4005/TL405LE or **T5** on GS4015).
- **IP Receiver Fail**: if selected, the output is activated whenever a problem occurs with the IP receiver.
- **FTC Fault**: if selected, the output is activated when a phone action does NOT terminate successfully and returns to standby when the most recent phone action terminates successfully.
- **Ethernet DoS Detected Fault**: if selected, the communicator activates the output when detects a DoS attack on the Ethernet channel.
- **Ethernet Network Fault**: if selected, the communicator activates the output when does NOT see the LAN network.
- **Power Fault**: if selected, the output is activated when a power problem is detected.
- **Reserved Output**: if selected the output may be activated by Caller ID or SMS.

☞ *If the **Reserved Output** option is enabled, all other options are disabled.*

- **Control String**: in this option, enter the string (maximum 16 alphanumeric characters) to be sent by SMS when you wish to activate/deactivate the corresponding output remotely. This function is available even if Caller ID is not enabled.
- **Activation Confirmation**: select the type of confirmation you want to receive when the output is activated: **none**, **Ring**, **SMS** (NOT available when the **Control String** option is left blank) and **Ring + SMS**. If the output is activated by an SMS, the activation confirmation will be sent by SMS (see table below).

SETTINGS			EFFECTS	
Black List Enabled	**White List**	**Activation Confirmation**	Call Forwarded (only if the communicator is switched to cellular channel)	Confirmation Ring
Disabled	Disabled	None	YES	NO
Disabled	Disabled	Ring	NO	YES
Disabled	Enabled	None	YES	NO
Disabled	Enabled	Ring	NO	YES
Enabled	Disabled	None	NO	NO
Enabled	Disabled	Ring	NO	YES
Enabled	Enabled	None	YES	NO
Enabled	Enabled	Ring	NO	YES

- **Type**: normally the outputs, when activated, remain so until a deactivation command is received (**Bistable**), at which point the output will revert to its standby status. If you wish the output to return to standby automatically after a set period of time, select the option **Monostable** and set this time in the option **Monostable Time ON** next to it.
- **Monostable Time ON**: enter a value in seconds (1 to 86400 in 1 second steps) to indicate the time for which the output, if monostable, remains active before returning to standby.

Input

When a T1, T2, T3, T4, T5 or T6 terminal is configured as an input, it can be programmed as **Normally Open** or **Normally Closed** (see **Polarity**). The input is polled at least every 30 ms and, if its state remains stable for more than 300 ms, **Input 1 Event** is generated (for terminal T1).

The following options are available when programming the inputs:

- **Panel Interconnection Present**: if enabled, deactivation of the input generates the **Panel Interconnection Fault** event and activating the input generates the **Panel Interconnection Restore** event.
- **Dialer Block**: if enabled, activating the input blocks the communicator and deletes the queue.
- **Force Communication on Simulated Line**: if enabled, activating the input switches from PSTN to cellular channel.

App Type Output

You can activate or deactivate the communicator's outputs through the **ConnectAlarm** app.

Use this menu to set how the app activates or deactivates the outputs.

- **Not Used**: the app cannot activate or deactivate the output.

- **Arm / Disarm**: the **ARM** and **DISARM** buttons can be used to activate and deactivate the output.

The output is set as **Bistable** and you must connect it to a control panel's input that arms the control panel when activated, and disarms the control panel when on standby:

You need a communicator input to receive the control panel's arming status: see **Arm / Disarm. Status**.

- **Partial Arm 1**: the button is used to activate the output. The button will have the same label you set for the output.

The output is set as **Monostable** and you must connect it to a control panel's input that performs a partial arming each time it is activated.

You need a communicator input to receive the partial arming status: see **Partial Arm / Dis. St 1**.

- **Partial Arm 2**: similar to **Partial Arm 1** but for partial arm 2.
- **Partial Arm 3**: similar to **Partial Arm 1** but for partial arm 3.
- **Partial Arm 4**: similar to **Partial Arm 1** but for partial arm 4.

- **Arm Only**: the **ARM** button is used to activate the output.

The output is set as **Monostable** and you must connect it to a control panel's input that arms the control panel each time it is activated.

You need a communicator input to receive the control panel arming status: see **Arm / Disarm. Status**.

- **Disarm Only**: the **DISARM** button is used to activate the output.

The output is set as **Monostable** and you must connect it to a control panel's input that disarms the control panel each time it is activated.

You need a communicator input to receive the control panel arming status: see **Arm / Disarm. Status**.

➢ **Automation Btn.**: if there is not an input set as **Automation input**, with the same label as the output in question, the app will have buttons to activate or deactivate the output similar to the following example, in the **Output** page.

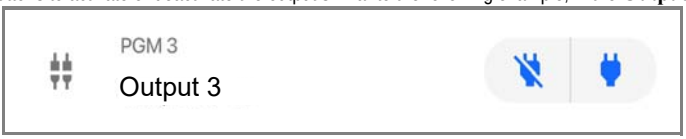

Element	Description
	Output icon.
PGM 3	Output terminal.
Output 3	Output label you set in the **Label** option.

The output is set as **Bistable** and you must wire it to switch on or off the required appliance: the output activates when you click the button ; the output goes on standby when you click the button .

☞ *You do not know the output status.*

If you want to know the output status, set a terminal as **Automation Input** and assign to it the same label as the output you want to control. In this case the app will have a button to activate or deactivate the output similar to the following example, in the **Output** page.

Element	Description
	Output icon.
PGM 1	Output terminal.
Output 1	Output label and input label you set in the **Label** option.
Off	Output status.

The output activates when you click the button : the button changes to , the status changes to **On**, and the output icon changes to .

The output goes on standby when you click the button : the button changes to , the status changes to **Off**, and the output icon changes to .

App Type Input

You can display the communicator's input status on the **ConnectAlarm** app.

This menu is for setting how the app shows the input state.

- **Not Used**: the app do not show the input state.
- **Arm / Disarm. Status**: this input type can be used to display on the app the arming status of the control panel.

When the input is on standby, and there are not any partial arm/disarm status inputs active, the app shows the following information:

When the input is active, the app shows the following information:

Connect this input type to a control panel's output that signals the arming status.

- **Partial Arm / Dis. St 1**: this input type can be used to display on the app the partial arming status of the control panel.

When the input is on standby, and there are not other partial arm/disarm status inputs, and arm/disarm status inputs active, the app shows the following information:

When the input is active, the app shows information similar to the following example:

In the above example, Perimeter is the input label you set in the **Label** option.

Connect this input type to a control panel's output that signals the partial arming status.

- **Partial Arm / Dis. St 2**: similar to **Partial Arm / Dis. St 1** but for the partial arming status 2
- **Partial Arm / Dis. St 3**: similar to **Partial Arm / Dis. St 1** but for the partial arming status 3.
- **Partial Arm / Dis. St 4**: similar to **Partial Arm / Dis. St 1** but for the partial arming status 4.
- **Alarm Status**: this input type can be used to display the alarm status of the control panel.

When the input is on standby, and there are no tamper status and fault status inputs active, the app shows the following information:

When the input is active, the app shows information similar to the following example:

In the above example, PANEL ALARM is the input label you set in the **Label** option.

Connect this input type to a control panel's output that signals the alarm status.

➢ **Tamper Status**: this input type can be used to display the tamper status of the control panel.

When the input is on standby, and there are no alarm status and fault status inputs active, the app shows the following information:

When the input is active, the app shows information similar to the following example:

In the above example, PANEL TAMPER is the input label you set in the **Label** option.

Connect this input type to a control panel's output that signals the tamper status.

➢ **Fault Status**: this input type can be used to display on the app the fault status of the control panel.

When the input is on standby, and there are no alarm status and tamper status inputs active, the app shows the following information:

When the input is active, the app shows information similar to the following example:

In the above example, PANEL FAULT is the input label you set in the **Label** option.

Connect this input type to a control panel's output that signals the fault status.

➢ **Automation input**: This input can be used to control the status of an appliance.

If there is no output set as **Automation Btn.**, with the same label as the input in question, the app will show the input status, on the **Output** page, as in the following example:

Element	Description
	Input icon when the input is in standby.
PGM 4	Input terminal.
Input 4	Input label you set in the **Label** option
Off	Input status when the input is in standby

When the input is active, the status is **On** and the input icon is .

Wire this input type to control the status of the required appliance.

Communicator

This page configures the events transmitted by the communicator.

Communicator Options

Call Options

- **Call All Numbers**: select this option to call all numbers set for a given event.
  You can select: **Voice Calls**, **CID: Over GSM**, **Voice Calls and CID: Over GSM** and **Disabled**. If this option is not selected, the communicator terminates the cycle of calls as soon one of them terminates successfully.
- **Call Confirmation**: select this option to have the dialer wait for the remote user to confirm reception of the voice message, otherwise the dialer will try sending the voice message again; the remote user can confirm by pressing * on his phone (for tone dialling phones only).

☞ *While listing to a voice message, pressing * on the phone keypad blocks both the current call and any queued calls as well. In some cases the dialer may bad interpret the response of answering machines, mobile service operator courtesy messages and so on, so we recommend leaving **Call Confirmation** enabled.*

- **Repeat Call**: this option is used to enter the number of attempts to be performed (up to a maximum of 8) if the call is not successful.
- **Repetitions**: enter the number of times the voice message is to be repeated (up to 8) when the called number answers.
- **Voice message Header**: select the voice message the communicator will play at the begin of each voice call.

Periodic SMS and Voice

- **Periodic SMS/Call Send Interval**: set the interval (**Days** and **Hours**) between two **Periodic Call/SMS** events. Range: 0 to 365 days and 0 to 23 hours.
- **Periodic SMS /Call First Send**: select the date and time for sending the first **Periodic Call/SMS** event.
  The **24hr/12hr** button allows you to select the time display format: 12 hour or 24 hour.
  The **Now** button sets the PC's current time.

☞ *In order to ensure conformity with EN 50136-2, the **Periodic SMS/Call First Send** time must be set to 1 day, and this function may not be modified. Factory setting: 1 day.*
*To set the options for **Periodic SMS/Call First Send**, enter the **SIM Phone Number** and enable **Automatic Clock Adjust** options in the **Options** page.*

- **Ring only for periodic event**: with this option enabled, the system sends a 5 s ring tone instead of a periodic voice message.

Periodic Call

- **Periodic Test Transmission Interval**: set the interval (**Days** and **Hours**) between two **Periodic Test Transmissions** events. Range: 0 to 365 days and 0 to 23 hours.
- **Periodic Test Transmission First Send**: set the date and time of the first **Periodic Test Transmission** event.
  The **24hr/12hr** button allows you to select the time display format: 12 hour or 24 hour.
  The **Now** button sets the PC's current time.

SIA

- **Date/Time on SIA packet**: if enabled, the SIA packet will include the date and time.

Inputs and Events

SMS / Push Notifications

This table specifies, for each event handled by the communicator, the SMS message to send to the numbers specified in the column **SMS Tel. Number**, and to the app.

- ❑ **Event**: this column lists the events for which a SMS message is to be sent: refer to "Internal events" on page 28 for a description of the events.
- ❑ **Telephone Numbers**: select the numbers to which an SMS is to be sent.
  Double click on [+] to expand the column: a table will be shown to select up to 8 telephone numbers from **Phonebook**.
  Click on a check box to enable/disable sending of a message to relative telephone number, for required events.
  Double click on [–] to collapse the column: a list of selected telephone numbers will be shown.
- ❑ **Push Notification**: if enabled, the event sends to the app the message set in the **SMS / Push Notification Text** option.
- ❑ **SMS / Push Notification Text**: enter the text to be sent when the event occurs (up to 70 characters).

Voice Calls

This table specifies, for each event handled by the communicator, the voice messages to send to the numbers specified in the column **Telephone Numbers**.

- ❑ **Telephone Numbers**: select the numbers to which the event is to send a voice message.
  Double click on [+] to expand the column: a table will be shown to select up to 8 telephone numbers from **Phonebook**.
  Click on a check box to enable/disable sending of a message to relative telephone number, for required events.
  Double click on [–] to collapse the column: a list of selected telephone numbers will be shown.
- ❑ **Voice Messages**: select the voice messages to be sent in response to the event: you can select up to three voice messages per event (**First Message**, **Second Message** and **Third Message**); click on **[...]** to browse the list of messages; you can select a pre-recorded message (see **Voice Messages**) or record a new one, or open a .wav file on the PC. The **Header** column shows the message selected in **Call Options** > **Voice Message Header**.

Central Station Calls

This table specifies, for each event handled by the communicator, the digital messages to send to the numbers specified in the column **Telephone Numbers**.

The communicator sends the Contact ID messages to the app when **Customer code** and **Contact ID Identifier** options are different from zero, and **Event Enabled** option is different from **Disabled**.

- ❑ **Event**: this column lists the events for which a digital message is to be sent.
- ❑ **Telephone Numbers**: select the numbers to which the event is to send the digital message, when you have selected **Channel Type**, **CID: Over GSM**.
  Double click on [+] to expand the column: a table will be shown to specifies which numbers in the **Phonebook** are to be used for sending digital messages (up to 8 numbers can be set).
  Click on a check box to enable/disable sending of a message to relative telephone number, for required events.
  Double click on [–] to collapse the column: a list of selected telephone numbers will be shown.

☞ *When you select **Channel Type**, **CID/SIA: over Data Network**, the events are transmitted to the IP receivers indicated in the **IP Receivers** page.*

- ❑ **Customer code**: enter the user code (4 hex characters).

☞ *You can set a different **Customer code** for each Input Event, or a single **Customer code** for all other events.*
DO NOT use the character "A" for Contact ID.

- **Contact ID Identifier**: enter the Contact ID the communicator is to send for the event.

☞ *The communicator also sends the qualifier 1 when the event occurs and the qualifier 3 when it terminates, as required by the Contact ID protocol.*

☞ *The communicator also sends the number of input that has triggered the event (the zone number): 01 for input 1, 02 for input 2, 03 for input 3, 04 for input 4, 05 for input 5, 06 for input 6.*

- **Event SIA Identifier**: enter the SIA code the communicator is to send when the event OCCURS.
- **Restore SIA Identifier**: enter the SIA code the communicator is to send when the event TERMINATES.
- **Event Enabled**: select **Disabled** to NOT send the event; select **Send Activation** to send ONLY the event's occurrence; select **Send Restoral** to send ONLY the event's restoral; select **Send Activation and Restoral** to send both.
- **Channel Type**: select **CID: Over GSM** to send the event with the Contact ID protocol using a voice call on the cellular channel; select **CID/SIA: over Data Network** to send the event with the Contact ID or SIA protocol on the cellular or Ethernet channel (the protocol will be the one selected in the **Communication Protocol** option in the **Options** page).

☞ *Contact ID messages may NOT be understood by the PSTN receivers due to distortion on the cellular network. It is recommended to select* **CID/SIA: over Data Network** *instead.*

CID/SIA Converter

If the communicator detects that the panel connected to the **LI** terminals is dialing a number from the **Phonebook** with the option **CID/SIA Event Conversion** enabled, it converts the panel's Contact ID or SIA message into a voice or SMS message, as indicated in this page.

The following tables show the way the **CID/SIA Converter** subgroup options concur in building of SMS and voice message.

1	**Labels/ Messages**	**SMS / Push Notifications**	**Labels/Messages** (5)			
2	**SMS Header for event**	**Activation** or **Advanced > Activation** or **Restore** or **Advanced > Restore**	**SMS Header for area**	**Partitions > Label**	**SMS Header for user** or **SMS Header for zone**	**Users > Label** or **Zones > Label**
3	7	16	7	16	7	16
4	DSC	Alarm	Partition	Warehouse	Zone	Entrance
	DSC	Alarm end	Partition	Warehouse	Zone	Entrance
	DSC	Arming	Partition	Warehouse	User	Brown
	DSC	Disarming	Partition	Warehouse	User	Brown

Table 14 – Conversion of Contact ID and SIA message to SMS: 1) option subgroup; 2) option; 3) SMS maximum length; 4) examples; 5) Contact ID only.

1	**Communicator Options**	**Voice Calls**	**Labels/Messages** (5)	
2	**Voice Message Header**	**Activation** or **Advanced > Activation** or **Restore** or **Advanced > Restore**	**Partitions > Voice Message**	**Users > Voice Message** or **Zones > Voice Message**
3	6 seconds	6 seconds	6 seconds	6 seconds
4	DSC	Alarm	Warehouse Partition	Entrance Zone
	DSC	Alarm end	Warehouse Partition	Entrance Zone
	DSC	Arming	Warehouse Partition	Brown User
	DSC	Disarming	Warehouse Partition	Brown User

Table 15 – Conversion of Contact ID and SIA message to voice message: 1) option subgroup; 2) option; 3) voice message maximum length; 4) examples; 5) Contact ID only.

Two setup modes are possible:

- the base setup allows you to convert digital messages to voice and/or SMS messages by setting up a small number of options: messages will signal event activation and restore only.
- the advanced setup allows you to convert digital message details like event description and, for Contact ID protocol, the involved partition, zone and user.

SMS / Push Notifications and **Voice Calls**

Base setup allows you to define general messages for **Alarms**, **Tampers**, **Openings and Closings** and **System Troubles** event categories, as explained in the following paragraphs.

- **Category**: shows the event categories. Settings made for a category will be automatically copied into all the category events, in the **Advanced** group.

☞ *If different settings for each event are required, the following options must be empty and the required settings shall be made in the **Advanced** group.*

- **Telephone Numbers**: select the numbers to which the event is to send a message.
  Double click on [+] to expand the column: a table will be shown to select up to 8 telephone numbers from **Phonebook**.
  Click on a check box to enable/disable sending of a message to relative telephone number, for required events.
  Double click on [–] to collapse the column: a list of selected telephone numbers will be shown.
- **Push Notification**: if enabled, the event send to the app the text message set in the **Activation** and **Restore** options.

Header: shows voice message selected in **Communicator Options** > **Voice Message Header**. The communicator will play this message at the begin of each voice call. It is generally used to identify the system.

☞ *This option is available in **Voice Calls** group only.*

- **Activation**: setup the message the communicator sends when an event in that category occurs.
- **Restore**: setup the message the communicator sends when an event in that category ends.

Advanced

This option group allows for the setup of different option for each event, over those explained in the base setup, as explained in the following paragraphs.

- **Event**: shows the events the communicator can convert.

- **Contact ID Identifier**: shows the default Contact ID code for the event. This option can not be modified.

☞ *This option is considered only if **Contact ID** has been selected as **Communication Protocol** in the **Options** page.*

☞ *If Contact ID codes differ from defaults have to be converted, you can set up to 10 custom event codes for events in the **Custom** group you can find at the end of event group list.*

- **Event SIA Identifier**: enter the SIA event code to be converted for the event verification.
- **Restore SIA Identifier**: enter the SIA event code to be converted for the event restore.

☞ *The **Event SIA Identifier** and **Restore SIA Identifier** options have default values that have to be verified. Enter 00 if conversion is not required.*

☞ *The **Event SIA Identifier** and **Restore SIA Identifier** option is considered only if **SIA** has been selected as **Communication Protocol** in the **Options** page.*

Labels/Messages

The Contact ID protocol sends information on users, zones and partitions of the events.

Options in this group allow for assignment to each user, zone and partition number a SMS and/or voice message used for the message building during the conversion.

☞ *Up to 128 user / zone / partition numbers in total can be converted.*

☞ *SIA protocol also sends information on users, zones and partitions but they are NOT converted by this communicator. If **SIA** is selected as **Communication Protocol** in the **Options** group, you can setup the **SMS Header for event** option ONLY.*

- **SMS Header for event**: enter the text you want at the begin of each SMS. Generally it is used to identify the system.
  Valid entries: up to 7 characters.
  Default: empty.
- **SMS Header for user**: enter the text you want before the message set for user identification.
  Valid entries: up to 7 characters.
  Default: a comma.
- **SMS Header for zone**: enter the text you want before the message set for zone identification.
  Valid entries: up to 7 characters.
  Default: a comma.
- **SMS Header for area**: enter the text you want before the message set for partition identification.
  Valid entries: up to 7 characters.
  Default: a comma.

Users / Zones / Partitions

- **Send only if user is defined / Send only if zone is defined / Send only if area is defined**: if disabled (default), a digital message is converted even if its user / zone / partition number is NOT present into the conversion tables. In this case the user / zone / partition information will be not present. If enabled, digital messages without user / zone / partition information in the conversion tables will be NOT converted.
- **Add**: select this button to add a user / zone / partition number to convert.
- **User Number / Zone Number / Partition Number**: enter the number to convert.
  Valid entries: from 0 to 999; 65535 to disable.
  Default: 65535.

- **Label**: enter a text useful for user / zone / partition identification.
  Valid entries: up to 16 characters.
  Default: empty.
- **Voice Message**: select a voice message useful for user / zone / partition identification.
  Default: (**none**).
- : select this button to delete relative row.

IP Receivers

This page sets the options relating to the communicator's connection with compatible Sur-Gard System IP receivers.

☞ *Given possible delays in transmission on the cellular data network, depending on the activity of the network operator, we recommend programming as high as possible the number of call attempts on the panel, and also setting a backup phone number which will send the alarms to a PSTN receiver.*

☞ *The communicator does NOT support the* **shutdown** *command by Sur-Gard receivers.*

Receiver Options

- **Receiver Channel Priority**: select the channel, and the priority, the communicator uses to communicate with the receivers. Factory setting: **Cellular Only**.
- **Fibro Account # (Cellular)**: enter the account number for the Fibro protocol over the cellular channel: when transmitting events to IP receivers, the Contact ID and SIA are wrapped in the Fibro protocol and this requires its own account number to identify the account which is sending the events.
  Contact your central station for details. Factory setting: 0000FFFFFF.

☞ *You must assign a different account number to each communicator which transmits events to a given receiver.*

- **Fibro Account # (Ethernet)**: similar to **Fibro Account # (Cellular)** but for the Ethernet channel.
  Contact your central station for details. Factory setting: 0000FFFFFF.
- **DNIS**: the communicator transmits the DNIS code inside the Fibro packet to enable the receiver to identify the device (hex numbers from 00000 to FFFFF).
- **Encryption Enabled**: if enabled the communicator encrypts all communications with the IP receivers to increase the security of its data transmissions.
- **Hold ACK in memory timeout**: sets how long an IP receiver ACK (acknowledge) is kept in memory. Within this period of time, if the communicator detects that the panel is attempting again to send a message to the IP receiver and the latter acknowledges it (ACK), the communicator confirms reception directly to the panel with a kiss-off signal, without sending the message again to the IP receiver. If set to 0 (factory setting) ACK's are not held in memory. It is worth setting a value greater than 0 when the panel attempts to transmit each call only once and does not manage to receive the ACK from the IP receiver on time. Range: 0 to 15 minutes. Factory setting: 0.

Receiver 1

- **Functionality mode**: select **Primary** (receiver 1 is enabled) or **Not Used** (receiver 1 is disabled, the programming of receiver 2 will be ignored, CID/SIA event transmission is disabled).
- **IP Address**: enter the receiver's IP address. The address can be entered in the numeric format (e.g. 192.168.0.101) or host and domain format (Fully Qualified Domain Name, e.g., host_name.domain_name.com).
- **Remote Port**: enter the UDP port receiver 1 is listening to. Range: 1 to 65535. Factory setting: 3061.
- **Receiver 1 Local Port**: for each receiver, the communicator uses a different UDP port. Range: 0 to 65535. If the local port is 0, the communicator uses a random port number in the range 1-65535. Factory setting: 3060 (3065 for receiver 2).
- **APN (Cellular)**: *enter the Access Point* name. This is generally supplied by the cellular network operator.

☞ *Make sure the APN is correct for access to the cellular data network, otherwise certain functions may be limited (contact your phone operator for details).*

- **APN User Name (Cellular)**: some operators require communication authentication; enter the user name in this field if necessary.
- **APN Password (Cellular)**: some operators require communication authentication; enter the password in this field if necessary.

- **Supervision Enabled**: if enabled, the communicator supervises communications with the receiver.

☞ *The supervision messages are not sent during voice calls (on cellular channel).*

- **Supervision Time (Cellular)**: set the supervision time for the cellular channel. Range: 60 to 65535 s, in 1 s steps.

☞ *In order to ensure conformity with EN 50136-2 supervision must be enabled and the* ***Supervision Time*** *must be no more than 3 minutes.*

- **Supervision Time (Ethernet)**: similar to **Supervision Time (Cellular)** but for the Ethernet channel.

Receiver 2

The options for **Receiver 2** are the same as those for **Receiver 1**, except for the differences described below.

☞ *If* ***Functionality mode*** *for receiver 1 is* ***Not Used****, you can NOT set the options for receiver 2: transmission of CID/SIA events to the central station is disabled.*

- **Functionality mode**: if **Functionality mode** for receiver 1 is **Primary**, receiver 2 may be:
  - **Not Used**, receiver 2 is disabled, the communicator sends the CID/SIA to receiver 1 only (this mode is called "single mode");
  - **Backup**, the communicator sends the CID/SIA messages to receiver 1 and, should it not be operational or reachable, sends them to receiver 2 (this mode is called "Main + Backup");
  - **Redundant**, the communicator sends the CID/SIA to both receiver 1 and receiver 2 simultaneously and sends the ACK (confirmation of reception) to the panel only if both receivers confirm reception (this mode is called "Redundant").

Voice Messages

The **Voice Messages** page enables you to record and play back voice messages: refer to "Inputs and Events" on page 63, for how to associate messages to events.

The voice messages can be recorded with a microphone connected to the PC, you can load pre-recorded messages from the PC (hard disk, LAN, USB key, etc.) or you can import voice messages from another communicator, as described in paragraph "Programming/Audio Import/Export" on page 44".

☞ *The Console can import all type of audio files in the WAVE format (.WAV).*

Play button: press this button to play back a voice message.

Record button: press this button to start recording a new voice message.

Stop button: press this button to stop playing back or recording the current voice message.

Pause button: press this button to pause playing back or recording the current voice message.

Clear button: press this button to delete a voice message saved in the communicator.

Open button: press this button to load a voice message from a PC resource (hard disk, LAN, etc.).

Save button: press this button to save a voice message to a PC resource (hard disk, LAN, etc.).

☞ *While a message is being recorded, a progress bar indicates the duration.*

PSTN/PTM

This page relates to the PSTN line and the PTM function (Panel Transmission Monitoring). The PTM function enables the communicator to forward calls on the cellular channel if communications between the panel and the receiver on the PSTN line fail.

☞ *After 5 minutes of use of the cellular channel, the communicator will start using the PSTN line again for forwarding panel calls.*

The PTM function considers communication to have failed when:

- it does not detect dialing, if the **Check Dialing** option is enabled (it checks that a number is actually dialled);
- it does not detect the kiss-off (the signal sent from the receiver when a communication terminates successfully).

If the **PTM All Numbers** option is enabled, PTM is executed when the panel dials any number, otherwise it only monitors the dialling of numbers which have the **PTM** option enabled in the **Phonebook**.

Calls are forwarded on the cellular channel when the **PTM Max Errors Before Takeover** setting is reached.

Primary Path

- **Primary Communication Path**: if you set **PSTN**, the communicator uses the PSTN line as its primary channel and switches to the cellular and Ethernet channels only when the PSTN fails or when the PTM function trips; if you select **Cellular and Ethernet**, the communicator uses ONLY the cellular and Ethernet channels.

Timeouts

- **LE Failure Timeout (sec)**: enter a time (10 to 3600 seconds) for which the phone line on the **LE** terminals can be absent before the **PSTN Fault** event occurs.

☞ *If any phone devices are connected to the **LI** terminals, this time may increase up to a maximum of approx. 60 s.*

- **LE Restore Timeout (sec)**: enter a time (10 to 3600 seconds) for which the phone line on the **LE** terminals must be present before the **PSTN Fault Restore** event occurs.

☞ *To ensure conformity with EN 50136-2, the **LE Restore Timeout (sec)** option should not be modified. Factory setting: 10 s.*

PTM

- **PTM Max Errors Before Takeover**: the communicator switches to cellular channel when it detects this number of failed attempts. Range: 1 to 4, 0 disables the option. Factory setting: 0 (disabled).
- **PTM All Numbers**: if enabled, PTM is executed when the panel dials any number, otherwise it only monitors the dialling of numbers which have the **PTM** option enabled in the **Phonebook**.

☞ *The **PTM Max Errors Before Takeover** option must be non-zero before you can modify the **PTM All Numbers** setting.*

- **Check Dialing**: if enabled, the communicator considers a off-hook followed by a on-hook without any number being dialled by the device connected to the **LI** terminals to be a failure. Factory setting: disabled.

☞ *The **PTM Max Errors Before Takeover** option must be non-zero before you can modify the **Check Dialing** option.*

Generic

- **Dialing Prefix**: when the communicator detects a number being dialled with the prefix in this setting, it sends the call to the cellular channel, to the phone number without the digits indicated in this option, even if the PSTN in available. Factory setting: 9999.

Event Log

The **Event Log** page displays the events logged by the communicator.

The communicator can save up to 2048 events: when the buffer is full, each new event overwrites the oldest, which is thus lost.

Each event indicates the date and time at which it occurred.

Symbols on the Event Buffer bar

Click on this icon to load the new events the next time a **Global Upload** or **Communicate Tags** is run.

Click on this icon to cancel the selection of events in the event buffer.

Click on this icon to open a window for saving an .XML file of the events loaded in the **Event Log** page.

☞ *The .XML file can be viewed with Excel or a compatible application.*

Click on this icon to display the events in relation to the criteria indicated in the **Events In** and **With Text** options.

- **Events In**: select the events you wish to view: **All Events**, **Today**, **Last 7 Days**, **Last 14 Days**, **Last 30 Days**, **Last Year** or **Custom**.
  Select **Custom** to set a specific period of time.
- **With Text**: only events containing the specified text will display.

Firmware Update

⚠ *Updating the firmware from 1.00 and 1.10 revisions to 1.20 revision and above, results in CID/SIA conversion settings to be lost.*

☞ *Only the level 4 installer, when enabled by the installer, can run firmware updates.*

The **Firmware Update** page updates the communicator's firmware, both locally (PC-Link or USB) and remotely (cellular data network).
Click on **Select Firmware File** to select the update file.
If the firmware update does not terminate successfully, the communicator will continue using the old version.

The name of the firmware file has the format FWxxyyzz.bin where:

- FW identifies the file as firmware;
- xx is the higher revision number;
- yy is the lower revision number;
- zz is the test revision number;

.bin is the extension for a binary file.

Status

The **Status** page gives a range of information about the communicator, as indicated below.

When you select the **Status** page, the console automatically displays the **Communicate Tags** window to establish communications with the communicator; once it is, the **Status** page updates every 5 seconds

Device Information

The **Device Details** box shows information which may be requested by technical assistance.

The **Network Status** box shows information relating to the cellular network, as given below.

- **GSM Provider Name**: indicates the name of the mobile phone operator.
- **GSM Signal Strength**: gives the strength of the cellular signal.
- **Cellular**: the type of network.
- **Best Operator**: when no SIM is in the communicator, it shows the mobile operator with the best signal strength.
- **Last Credit Received**: shows the SIM's credit updated to the last request made with the **Request for PayAsYouGo Balance** button or as programmed in the **Pay As You Go Balance** section of **Options** page.
- Last Credit Date/Time: shows the date and time of the last credit update.
- **Request for PayAsYouGo Balance**: press this button to display the residual credit of the communicator's SIM card.

☞ *This function is only available with the local connection (PC-LINK or USB) and if the **Pay As You Go Balance** options in the **Options** page have been set properly.*

GSM

LED	Normal operation	Malfunction
GSM ready	Green: the cellular network is available and the communicator is operating.	Red: the communicator is not yet ready.
Radio ON	Green: the radio module is on.	Red: the radio module is off.
SIM OK	Green: the SIM is properly functioning.	Red: there is a problem with the SIM card: SIM not present, SIM expired, PIN enabled on SIM.
Carrier OK	Green: the operator is connected.	Red: the operator has not been connected.
Signal OK	Green: the signal strength is above the required minimum.	Red: signal too low or no signal.

Main board

LED	Normal operation	Malfunction
Power OK	Green: main power (**+V** terminal) is above the minimum threshold.	Red: main power (**+V** terminal) is less than 10 V.
Battery OK	Green: the communicator's battery (if any) is charged.	Red: the battery voltage is less than 3.4 V.
PSTN OK	Green: the PSTN line (connected to the communicator's **LE** terminals) is available.	Red: the voltage on the **LE** terminals is less than 2.5 V.
No Jamming	Green: no jamming.	Red: the communicator's function is being jammed (sabotage).
Antenna OK	Green: the antenna ANTLTE-02 is connected and working properly.	Red: the antenna ANTLTE-02 is connected but NOT working OK (wire cut).

Call

- **Incoming Call**: orange—the communicator is receiving a call.
- **Call In Progress**: green—the communicator is engaged with a call.
- **Outgoing Call**: orange—the communicator is making a call.
- **Radio Initializing**: green—the radio is initialising.
- **Passthrough**: green—the communicator is in pass-through mode.

App Server

- **Cellular Status**: like **Cellular Status** of **Receiver 1** but for connection status with the app server, over the cellular channel.
- **Ethernet Status**: like **Cellular Status** of **Receiver 1** but for connection status with the app server, over the Ethernet channel.

Receiver 1

- **Cellular Status**: this LED shows the connection status with receiver 1, over the cellular channel, as given below.
  - grey: the options for receiver 1 have NOT been programmed;
  - orange: receiver 1 is connected but NOT initialised;
  - red: the options for receiver 1 have been programmed but the receiver is not initialised, has disconnected due to a problem, is unable to connect or initialisation has failed;
  - green: receiver 1 is initialised and connected.
- **Ethernet Status**: like **Cellular Status** but for connection status with receiver 1, over the Ethernet channel.

Receiver 2

- Like **Receiver 1** but for receiver 2.

Inputs

Shows input status: grey, standby input; green, active input.

Outputs

Shows output status: grey, standby output; green, active output.

Once the options have been set up, they must be downloaded to the associated communicator, as follows.

To perform the downloading and uploading you must connect the communicator to the PC on which the console is installed.

☞ *It is also possible to download and upload options using a USB key as described in "Operations with the USB key" on page 82.*

Connecting the communicator to the PC

You can connect the communicator to a PC:

- ➢ locally, via the PC-LINK serial port;
- ➢ locally, via the USB serial port;
- ➢ locally, via LAN net (request the Ethernet interface);
- ➢ remotely, via the Internet, via cellular or Ethernet channel (the Ethernet channel requests the Ethernet interface);

❑ Connecting via PC-LINK serial port

1. Connect the communicator PC-LINK serial port to a free RS232 serial port on the PC using the PC-LINK cable (accessory item), as shown on Figure 8.

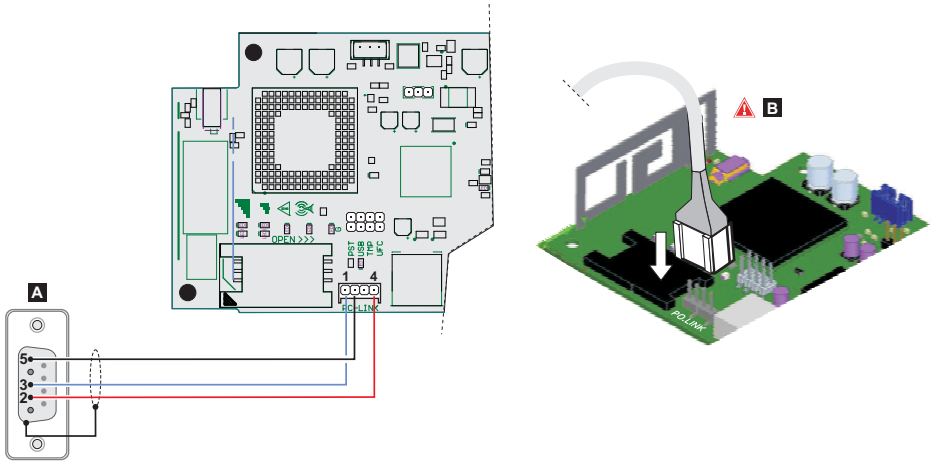

Figure 8 – PC-LINK cable connection: A) RS-232 female connector, solder side B) insert the PC-Link cable properly.

2. Select the PC serial port used for connection with the communicator, as follows:
   – select **Modem Manager Configuration** from the **Tools** menu;
   – select the **PCLINK - COM1** connection;
   – select the PC serial port where the communicator is connected to, from the **Port** menu;
   – click **OK**.

❑ Connecting via USB serial port

☞ *Be sure that the **PST** jumper is NOT present otherwise communicator programming and status view are NOT possible.*

1. Connect the communicator USB serial port (17 on Figure 2) to a free USB serial port on the PC using the **USB-5M** cable (optional) or an equivalent USB cable (USB A-A cable).

2. Select the PC serial port used for connection with the communicator, as follows:
   – select **Modem Manager Configuration** from the **Tools** menu;
   – select the **PCLINK - COM1** connection;
   – select the PC serial port where the communicator is connected to, from the **Port** menu;
   – click **OK**.

❑ Connection via Internet (cellular or Ethernet)

To set up connection via Internet (cellular or Ethernet), do the as follow.

☞ *If a Ethernet connection is available, the cellular channel is used just to start the connection, after that the communication continues on the Ethernet channel.*

1. Select the customer account properties (right click on the customer account's name, then **Properties**).
2. On the left of the **Account Name** window, select the communicator from **Panels/Modules** branch.
3. If you have not already done, enter the communicator's **Device ID**[1], and set the **EN50136** option as required.
4. Select **Cellular (IP remote)** from the **Connection Type** menu then click **Add**.
5. Select **Cellular (IP remote)**[2] from the communicator branch then enter the telephone number for the communicator in the **Panel Phone Number** field, select required **Connection Timeout**[3], and click **Save**.
6. Open the customer account and select **Global Download** , **Global Upload** , or **Communicate Tags** .
7. Select **Cellular (IP remote)** from the **Connection Type** menu, and enter the **Access Code** for the indicated **User Type**.

☞ *You can disable the option **Automatically Hangup when Finished** to keep the connection live until you click the **Disconnect Immediately** button under the **Disconnect When Complete** menu.*

8. Click **OK**: the **SMS Message Generator** window displays.
9. Type the public IP address of the router to which the PC is connected in the option **Public IP Address** and the port to access the console (**DLS Port**): ask the network administrator or see the router's instructions.
10. If this is the first installation, press **APN Settings** and set the **APN Name**, **User Name**, and **Password** for mobile data services (ask the operator of the mobile data service).

☞ *Make sure to type the correct APN for WAP access - otherwise some functions may be limited.*

11. Prepare an SMS message as outlined in the **SMS Message Generator** window or scan the QR code shown in the same window, then click **OK**: the console waits for the incoming connection.
12. Send the SMS to the communicator number before the **Connection Timeout** time expires.

After receiving the SMS message, if correct, the communicator opens a remote connection via cellular or Ethernet channel with the console: at this point, options can be downloaded or uploaded, as outlined in the section "How to download and upload the options" on page 78, and the communicator can be managed through the **Status** page.

☞ *On the router connected to the console PC, the forwarding port from the console external port to port 51004 (internal console port, CANNOT be changed) must be configured: request router instructions from the network administrator.*

❑ Connection via LAN (IP)

---

1. *Enter the communicator's serial number from the communicator's electronic board: you can find the same option in the **Network Settings** option group.*
2. *When **Save** is pressed **Cellular (IP remote)** is replaced by the number entered in **Panel Phone Number**.*
3. ***Connection Timeout** is the time the communicator waits for a configuration SMS.*

To set up connection via LAN (IP), proceed as described below.

1. Connect the communicator's Ethernet port (31 in Figure 1) to the LAN network where the PC with the console is connected, or directly to the PC with the console.
2. Select the customer account properties (right click on the customer account's name, then **Properties**).
3. On the left of the **Account Name** window, select the communicator from **Panels/Modules** branch.
4. Select **IP** from the **Connection Type** menu then click **Add**.
5. On the left of the **Account Name** window, select **IP** in the communicator branch.
6. Click **AUTO Discovery**: the table in the **IP Detected** section will show the communicators found on the LAN.
7. Select the required communicator from the **IP Detected** table: the **IP Address** of the selected communicator is copied in the **IP** filed.
8. Align the option **Port** with the option **Ethernet Local Incoming Port** in **Network Settings > DLS**, if you changed the factory setting 3062.
9. Click **Save**.

At this point it is possible to download and upload options as outlined in the section "How to download and upload the options" on page 78, and manage the communicator via the **Status** page.

❑ Notes for Internet connection (cellular or Ethernet)

To download and upload options via Internet (cellular or Ethernet):

- the PC on which the console is installed must be connected to the Internet;
- the PC must have a public IP address and a public port for incoming connections to the console;
- the firewall and the router must allow the PC to connect the public port to port 51004 of the console;
- the communicator's options must be set as described in "Network Settings" on page 52;
- a SIM card must be inserted in the communicator and the credit on the SIM must be sufficient for cellular data services.

How to download and upload the options

Once you have set up the connection, you can download and upload the options as follow.

☞ *Downloading is the operation that transfers data from PC to communicator. Uploading is the operation that transfers data from communicator to PC.*

1. Either select the options to download and upload by enabling the relative downloading or uploading tabs or jump to the next step to download or upload ALL the options (global downloading or uploading):

- the tag ( ) means that the relative option neither will be uploaded nor downloaded;
- the blue tag ( ) means that the relative option will be uploaded;
- the red tag ( ) means that the relative option will be downloaded.

☞ *Modified options are automatically marked for uploading.*

You can enable all the group options to be uploaded or downloaded by clicking on the or icon.

You can clear all the group option tags by clicking on the icon on the group toolbar.

You can clear option tags of all groups by clicking on the icon on the main toolbar.

2. Either click on the icon to start the downloading and uploading of the selected options or click on the or icon to download or upload ALL the options.

☞ *Global downloading does not download voice messages and the voice message labels. Global uploading does not upload voice messages, the voice message labels and event log[1].*

The application shows the **Communicate Tags**, **Global Download** or **Global Upload** window.

3. Select the **Connection Type**.
4. Ensure the **Access Code** is the same as the **User Code**, **Installer Code** or **Level 4 Installer Code** set in the **Options** group (factory setting, respectively 000000, 111111, and 222222) and the **Device ID** is correct (see "Network Settings" on page 52).
5. Click **OK**.

1. *The event Log can be uploaded from the **Event Log** page.*

APPENDIX

Conformity with EN 50136-2:2013

To be compliant with EN50136-2:2013, the communicator must be configured and connected to a burglary alarm panel in one of the two following ways (A and B) only:

A) PSTN connection (the panel must monitor the receiver's response directly via PSTN)

- PSTN: The communicator's **LI** terminals are connected to the panel's external phone line terminals.
- Terminal **T4**, configured as the **Tampers** output, is connected to a panel input (models with plastic housing only).
- Terminal **T5**, configured as the **GSM Fault** output, is connected a the panel input.
- Terminal **T3** configured as **Panel Interconnection Present** input, is connected to the panel signal, to report that the panel is present, or phone line present signal.
- Terminal **T6**, configured as **IP Receiver Fail**, is connected to the panel's jamming input.

☞ *In the communicator's programming page **IP Receivers**—specify an IP receiver.*

B) no PSTN

- Terminal **T4**, configured as the **Tampers** plus **Jamming Detect** output, is connected a the panel input (models with plastic housing only).
- Terminal **T5**, configured as the **GSM Fault** output, is connected a the panel input.
- Terminal **T1**, configured as the alarm/tamper input, is connected to the panel's intrusion alarm/tamper output.

☞ ***Input 1 Event** is used to send the intrusion alarm code.*

- Terminal **T2**, configured as an input, is connected to the panel's fault output.

☞ ***Input 2 Event** is used to send the fault code.*

- Terminal **T6**, configured as **IP Receiver Fail** output, is connected a the panel's input.
- Terminal **T3** configured as **Panel Interconnection Present** input, is connected to the panel signal, to report that the panel is present.
- The communicator's earth terminal must be connected to a panel input, to detect the connection between the panel and the communicator.

☞ *In the communicator page **Central Station Calls**, for the two events **Input 1 Event** and **Input 2 Event**, set a **Customer Code** and set **Channel Type** to **CID/SIA: over Data Network**. In the **IP Receivers** page, specify an IP receiver.*

See the following tables.

	Communicator		Panel
	LI	← →	LE
	T1: **PSTN Fault** output		
	T2: **No Cellular Network** output		

Table 16 – Connection scheme A: simulated PSTN.

	Communicator		Panel
Factory setting	T3: **Panel Interconnection Present** input	←	LE detection output
	T4: **Tampers** output	→	Communicator tamper input
	T5: **GSM Fault** output	→	Cellular fault input
	T6: **IP Receiver Fail** output	→	IP receiver communications failure input

Table 16 – Connection scheme A: simulated PSTN.

	Communicator		Panel
Factory setting	T1: Alarm/Tamper input	←	Alarm/Tamper output
	T2: Fault input	←	Fault output
	T3: **Panel Interconnection Present** input	←	Interconnection present output
	T4: **Tampers** plus **Jamming Detect** output	→	Communicator tamper input
	T5: **GSM Fault** output	→	Cellular fault input
	T6: **IP Receiver Fail** output	→	IP receiver communications failure input
	Earth terminal	→	Earth terminal

Table 17 – Connection scheme B: without simulated PSTN.

☞ *The following must be configured: an event for sending the alarm/tamper Contact ID, in case of activation of input 1, and an event for sending the fault Contact ID in case of activation of input 2.*

☞ *The USB can ONLY be used if the communicator is in USB Host mode (see "Description of jumpers" on page 11) and the* ***EN50136*** *option is disabled (see "Options" on page 49).*

The USB key allows you to:

- update the communicator's firmware;
- export/import the communicator's settings;
- export/import the communicator's voice messages;
- export the communicator's event buffer;
- Load custom defaults into the communicator.

When a USB key is inserted into the communicator's USB port, the folder structure in figure 9 is created (marked with the symbol 🗁).

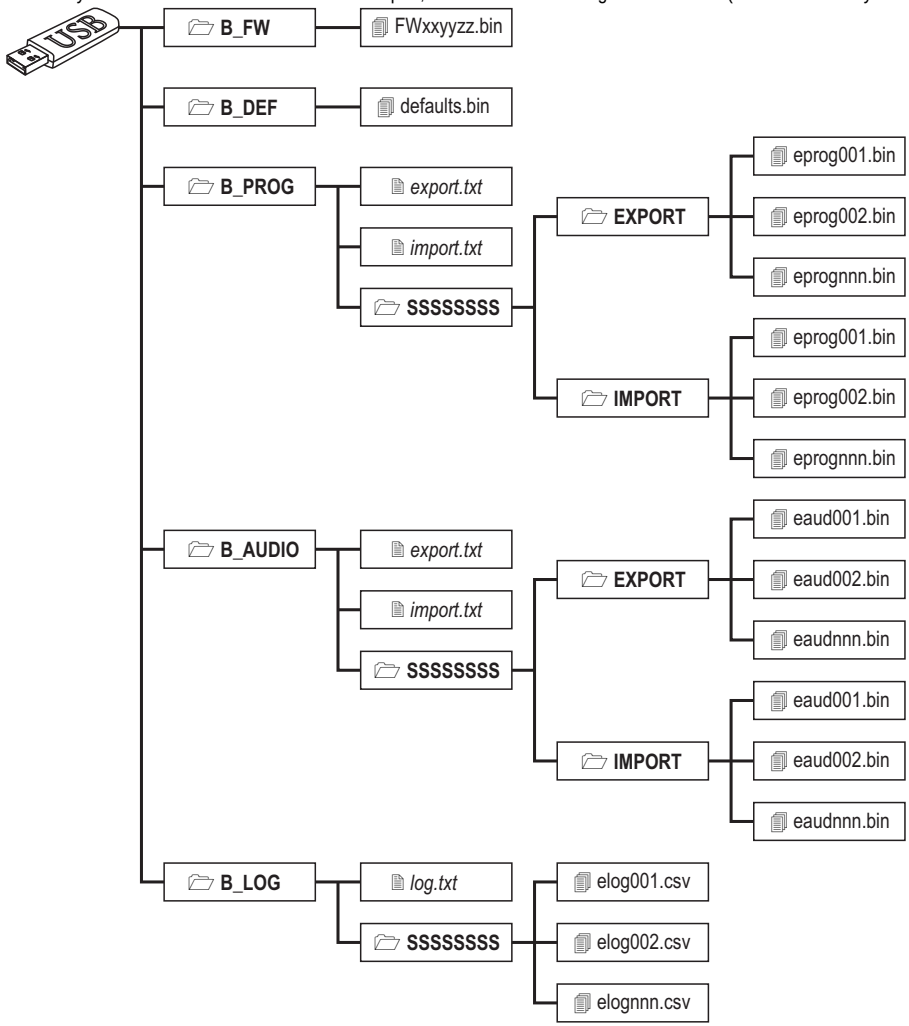

Figure 9 – File structure of a USB key used with the communicator.

SSSSSSSS represents the communicator's serial number (8 hex digits), so that a single USB key can hold data for several different communicators: each communicator will read/write to its own folder.

When a USB key is inserted into the communicator, the following procedure is executed:

1. Firmware update, if a valid firmware is in folder B_FW;
2. Communicator set with custom defaults, if defaults.bin is in the folder B_DEF (see “Loading custom defaults” on page 83 for more details).
3. Communicator settings file export, if the file export.txt is in folder B_PROG;
4. Communicator settings file import, if the file import.txt is in folder B_PROG;
5. Communicator voice message export, if the file export.txt is in folder B_AUDIO;
6. Communicator voice message import, if the file import.txt is in folder B_AUDIO;
7. Communicator event buffer export, if the file log.txt is in folder B_LOG;

Firmware Update

This operation updates the communicator's firmware from a USB key.

1. Download the firmware from the site www.dsc.com.

The name of the firmware file has the format FWxxyyzz.bin where:

- FW identifies the file as firmware;
- xx is the higher revision number;
- yy is the lower revision number;
- zz is the test revision number;
- .bin is the extension for a binary file.

☞ *DO NOT rename the firmware file, otherwise the communicator will not recognise it.*

2. Copy the firmware into folder B_FW on the USB key.
3. Insert the key into the communicator's USB port.

If the communicator finds an invalid firmware in folder B_FW, the ACT LED will flash slowly and the event **Firmware Upgrade failed - System** is logged to the event buffer.

If the communicator finds a valid firmware in folder B_FW, which is also different from its current firmware, it will install it.

☞ *If more than one firmware file is in folder B_FW, the communicator will install the one with the highest revision number.*

If folder B_FW contains a firmware which is less recent than the current one installed on the communicator, it is installed anyway: firmware updates allow you to install a more recent firmware or restore an older one than currently installed on the communicator.

At the end of the process the communicator reboots and logs the event **FW upgrade done - System**.
in the event buffer.

Loading custom defaults

To load custom defaults from a USB key, complete the following steps.

1. Create the folder B_DEF on the USB key, if it is not already there.
2. Copy the settings file to the B_DEF folder: the settings file may be created as described in the export procedure, or on the Console.

☞ *The export procure and the console generate the file eprognnn.bin, where nnn is an index from 001 to 999. You must rename the file to defaults.bin before coping it in the B_DEF folder.*

3. Delete the B_PROG/import.txt file, if present.
4. Insert the USB key into the USB port of the communicator.

5. Close the **PST** and **USB** jumpers.
6. Perform the factory setting restore as indicated in “Restore Factory Settings” on page 45.

The communicator is programmed as specified in the defaults.bin file; it then reboot.

☞ *Do not remove the USB key until the communicator reboots.*

After the communicator reboots, you can set the **PST** and **USB** jumpers as required.

☞ *You can import the default settings in any communicator because the defaults.bin file is independent form the communicator that has generated it.*

Exporting settings

This operation exports the communicator's settings to a USB key.

1. Create the folder B_PROG on the USB key, if it is not already there.
2. Create a new text file in folder B_PROG and call it export.txt.
3. Insert the USB key into the communicator's USB port.

The communicator will export its settings to B_PROG\SSSSSSSS\EXPORT\eprognnn.bin, where:

- SSSSSSSS is the communicator's serial number;
- eprog is the prefix for a communicator settings file;
- nnn is an index from 001 to 999;
- .bin is the extension for a binary file.

In the EXPORT folder, the communicator will search for setting file with the highest index and create a setting file with that index incremented.

If the EXPORT folder already has a settings file with index 999, exporting is not possible: the ACT LED will flash slowly and the event **USB Programming Export Failed - System** is logged to the event buffer.

Importing settings

This procedure imports settings from a USB key.

1. Create the folder B_PROG on the USB key, if it is not already there.
2. Create a new text file in folder B_PROG and call it import.txt.
3. Create the folder SSSSSSSS in B_PROG, where SSSSSSSS is the serial number of the communicator to which you wish to import the settings.
4. Create the folder IMPORT in the SSSSSSSS folder.
5. Copy the settings file to the IMPORT folder: the settings file may be created as described in the export procedure, or on the Console.
6. Insert the USB key into the USB port of the communicator with the serial number SSSSSSSS.

The communicator will delete the file import.txt and will be programmed as specified in the imported settings file: it will then reboot

☞ *You can import settings files ONLY if the originating communicator has the same installer code.*

☞ *If folder B_PROG contains both the files export.txt and import.txt, the communicator will first export its current settings (backup) and then import the new ones.*

Exporting Voice Messages

This operation exports the communicator's voice messages to a USB key.

1. Create the folder B_AUDIO on the USB key, if it is not already there.

2. Create a new text file in B_AUDIO and call it export.txt.
3. Insert the key into the communicator's USB port.

The communicator will export its voice messages to B_AUDIO\SSSSSSSS\EXPORT\eaudnnn.bin, where:

- SSSSSSSS is the communicator's serial number;
- eaud identifies the file as containing voice messages;
- nnn is an index from 001 to 999;
- .bin is the extension for a binary file.

The communicator will search EXPORT for the voice messages file with the highest index and create a new one with that index incremented by one; if EXPORT already contains a file with the index 999, it will not export the file: the ACT LED will flash slowly and the event **USB Audio Export Failed - System** will be logged to the event buffer.

Importing Voice Messages

This procedure imports voice messages from a USB key.

1. Create the folder B_AUDIO on the USB key, if it is not already there.
2. Create a new text file in B_AUDIO and call it import.txt.
3. Create the folder SSSSSSSS in B_AUDIO, where SSSSSSSS is the serial number of the communicator to which you wish to import the messages.
4. Create the folder IMPORT in the SSSSSSSS folder.
5. Copy the audio file to the IMPORT folder: the settings file may be created as described in the export procedure, or on the Console.
6. Insert the USB key into the USB port of the communicator with the serial number SSSSSSSS.

The communicator will import the voice messages.

☞ *If folder B_AUDIO contains both the files export.txt and import.txt, the communicator will first export its current audio (backup) and then import the new messages.*

Exporting the Event Buffer

This operation exports the communicator's event buffer to a CSV format text file (Comma Separated Value) on the USB key: the CVS file can be viewed with Excel and Noteblock.

1. Create the folder B_LOG on the USB key, if it is not already there.
2. Create a new text file in B_LOG and call it log.txt.
3. Insert the key into the communicator's USB port.

The communicator will export its event log to B_LOG\SSSSSSSS\EXPORT\elognnn.csv, where:

- SSSSSSSS is the communicator's serial number;
- elog identifies the file as an event buffer;
- nnn is an index from 001 to 999;
- .csv is the file extension.

The communicator will search SSSSSSSS for the log file with the highest index and create a new one with that index incremented by one; if SSSSSSSS already contains a file with the index 999, it will not export the file: the ACT LED will flash slowly and the event **USB Log Export failed - System** will be logged to the event buffer.

This function allows PowerSeries Neo v1.2 panels and above, and PowerSeries v4.1 panels and above to be remotely programmed via cellular or Ethernet channel using the communicator and the latest console version. You can download the latest console version from www.dsc.com, as illustrated in figure 10.

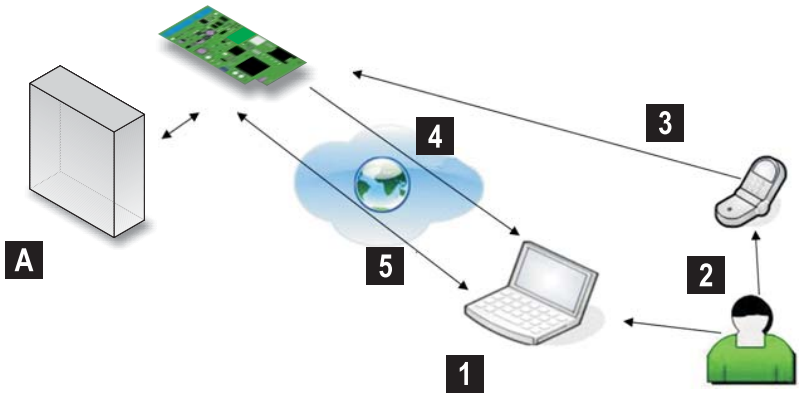

Figure 10 – Remote programming with the console: A) panel; 1) The operator launches a communications session on the console by selecting the ***Cellular (IP remote)*** *connection type — the console displays the information required for the SMS; 2) The operator sends the SMS with his own phone, using the displayed information; 3) The SMS specifying the console's public IP and port is sent to the communicator; 4) The communicator connects to the console via cellular or Ethernet channel; 5) The console communicates with the panel (upload/download options) via the communicator.*

The communicator must be programmed accordingly before connecting it to the panel.

☞ *Serial communications via the PC-LINK connector are interrupted when working with the USB key, so the panel may report an error.*

Programming the communicator

To program the communicator, see the section "PC PROGRAMMING" on page 42. Proceed as follows, using the console.

1. Enable **Remote Access** on the communicator (see **Network Settings** page).
2. If you want to use the cellular network, program a valid **Remote Access APN** on the communicator (see **Network Settings** page).

☞ *Make sure the* ***PST*** *jumper is in place: when the* ***PST*** *jumper is inserted, the USB port is NOT enabled for Communicator programming by means the Console (USB Device mode), it is enabled for the USB keys only (USB Host mode).*

Connecting the communicator to the panel

To connect the panel to the communicator, use the PCLINK-PCLINK cable supplied with the communicator, connected to the PC-LINK 15 connector on the communicator and the PC-LINK connector on the panel (CON4 on PowerSeries panels; CON5 on PowerSeries Neo panels), taking care to insert it in the right orientation (see figure 11).

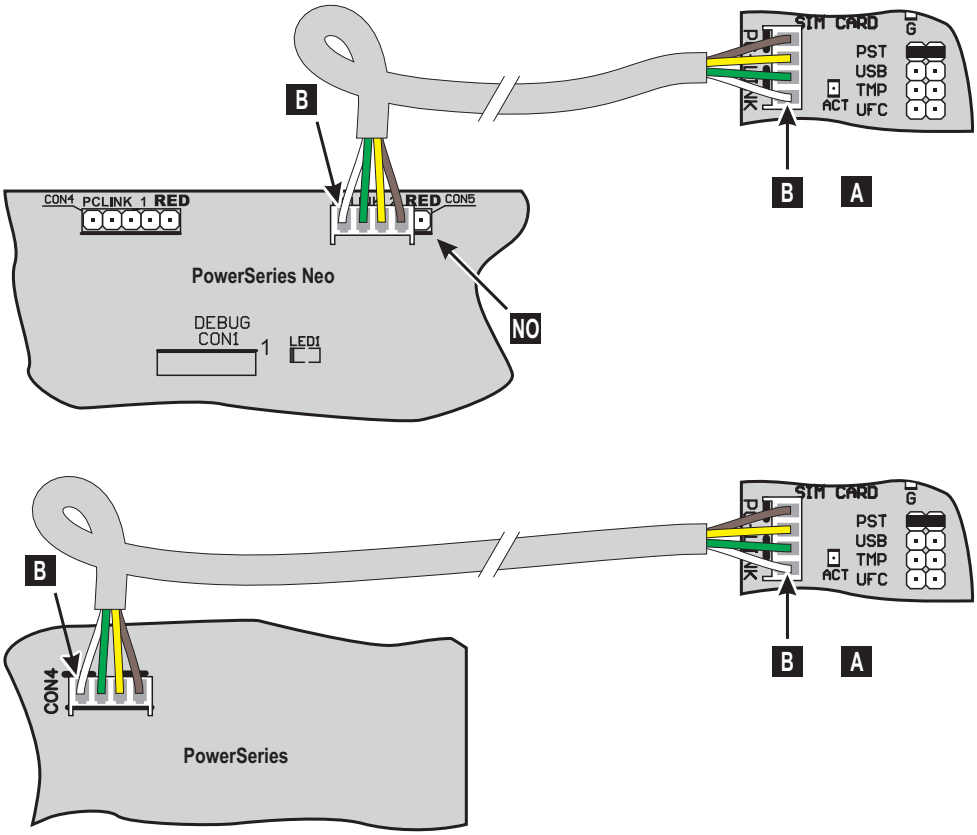

Figure 11 – Connecting the communicator to the panel with the PCLINK-PCLINK cable: A) Communicator; B) white wire.

Panel procedure

Make the following checks on the panel.

1. Check section 382 o the panel: option 5 must be set to ON.
2. NO faults are permitted, the GREEN LED on the panel must be ON: this indicates that the panel is detecting the communicator as connected and valid.

PC procedure

Proceed as follows on the PC before remotely programming with the console.

1. The PC must have a public IP address and a public port for the console's incoming connection.
2. The firewall and router must permit connection of the PC's public port to port 51004 on the console.
3. Make sure it is possible to access the router's public port from another PC to check that the console can be accessed by the device.

Setup existing account

1. Launch the console on your PC.
2. Right click on the desired account and select **Properties**.
3. On the left of the **Account Name** window, select the control panel in the **Panels/Modules** branch.
4. In the **Module** menu, select the communicator connected to the control panel, and click **Add**.

☞ *When you add a communicator to an account, you see the communicator's options with the control panel's options inside the console (see the **GS / IP** option group).*

5. On the left of the **Account Name** window, select the added communicator under the control panel branch.
6. Enter the communicator's **Device ID**, and set the **EN50136** option as required: the communicator's **Device ID** is on its PCB.
7. In the **Connection Type** menu, select **Cellular (IP remote)** if you want enable the pass-though via the cellular channel of the communicator, or select **IP** if you want enable the pass-though via the Ethernet channel of the communicator, then click **Add**.

☞ *You can select **IP** if you have selected a dual-path communicator on step 4, the communicator is connected to a LAN or WAN though the Ethernet interface, and you know the public IP address of the communicator.*

☞ *If you select **Cellular (IP remote)**, the pass-through is performed via the Ethernet channel if the control panel is connected to a dual-path communicator and the communicator is connected to a WAN via its Ethernet interface.*

	Cellular (IP remote) connection type	**IP** connection type
8.	On the left of the **Account Name** window, select **Cellular (IP remote)** under the communicator branch.	On the left of the **Account Name** window, select **IP** in the communicator branch.
9.	Enter the communicator phone number in the **Panel Phone Number** option and select the time that the communicator waits for the connection SMS in the **Connection Timeout** menu.	Enter the public IP address of the communicator in the **IP** option. If you do not know the IP address of the communicator, and the communicator is connected on the same PC's LAN, proceed to step 10.
10.	Click **Save**.	Click **AUTO Discovery** and wait for the console to identify the communicators connected to the LAN.
11.		Select the required communicator: the **IP** option is automatically filled with the **IP Address** of the selected communicator.
12.		Click **Save**.

You can now communicate remotely with the control panel via cellular or Ethernet, as indicated in “Downloading and uploading options” on page 89.

Setup new account

1. Launch the console on your PC.
2. Select **New Account** and select the **Panel Type**.

3. In the **Connection Type** menu, select one of the GPRS or IP item, according to the communicator connected to the control panel.

☞ *For dual-path communicators there are GPRS and IP option: you can select the IP option if the communicator is connected to a LAN or WAN though the Ethernet interface, and you know the public IP address of the communicator.*

4. Enter the communicator's **Device ID**, and set the **EN50136** option as required: the communicator's **Device ID** is on its PCB.
5. Set the other options as indicated on the control panel's instructions.

	GPRS connection type	IP connection type
6.	Enter the communicator phone number in the **Panel Phone Number** option and select the time that the communicator waits for the connection SMS in the **Connection Timeout** menu.	Enter the public IP address of the communicator in the **IP** option. If you do not know the IP address of the communicator, and the communicator is connected on the same PC's LAN, proceed to step 7.
7.	Click **Create**.	Click the **Advanced** button: the **Account Name** windows opens.
8.		On the left of the **Account Name** window, select **IP** in the communicator branch.
9.		Click **AUTO Discovery**: the table in the **IP Detected** section will show the communicators found on the LAN.
10.		Select the required communicator from the **IP Detected** table: the **IP Address** of the selected communicator will be copied in the **IP** filed.
11.		Align the option **Port** with the option **Ethernet Local Incoming Port** in **Network Settings** > **DLS**, if you changed the factory setting 3062.
12.		Click **Create**.

You can now communicate remotely with the control panel via cellular or Ethernet, as indicated in "Downloading and uploading options" on page 89.

Downloading and uploading options

1. Open the account.
2. Select the required downloading or uploading operation: **Global Upload**, **Global Download**, **Communicate Tags**: the connection window shows the communicator or the control panel, depending on the options to download and upload
3. Select the device's options to upload and download in the **Selected** column, and choose the connection type for the control panel and the communicator.
4. In the **Connection Type** menu, select the desired connection type: you can select **Cellular (IP remote)** and **IP** depending on the connection you set (see "Setup existing account" on page 88 and "Setup new account" on page 88).

☞ *You can disable the option **Automatically Hangup when Finished** to keep the connection live until you click the **Disconnect Immediately** button under the **Disconnect When Complete** menu.*

	Cellular (IP remote) connection type	IP connection type
5.	Click **OK**: the **SMS Message Generator** window displays.	Click **OK**: the console add the job to the queue.

Cellular (IP remote) connection type	IP connection type
6. Type the public IP address of the router to which the PC is connected in the option **Public IP Address** and the port to access the console (**DLS Port**): ask the network administrator or see the router's instructions.	
7. If this is the first time installed, press **APN Settings** and set the **APN Name**, **User Name**, and **Password** for mobile data services (ask the operator of the mobile data service).	
☞ Make sure to type the correct APN for WAP access, otherwise some functions may be limited.	
8. Prepare an SMS message as outlined in the **SMS Message Generator** window or scan the QR code shown in the same window, then click **OK**: the console waits for incoming connection.	
9. Send the SMS to the communicator number before the **Connection Timeout** time expires.	

FCC Compliance Statement

CAUTION: Changes or modifications not expressly approved by Tyco Safety Products Canada Ltd. could void your authority to use this equipment.

This equipment generates and uses radio frequency energy and if not installed and used properly, in strict accordance with the manufacturer's instructions, may cause interference to radio and television reception. It has been type tested and found to comply with the limits for Class B device in accordance with the specifications in Subpart "B" of Part 15 of FCC Rules, which are designed to provide reasonable protection against such interference in any residential installation. However, there is no guarantee that interference will not occur in a particular installation. If this equipment does cause interference to television or radio reception, which can be determined by turning the equipment off and on, the user is encouraged to try to correct the interference by one or more of the following measures:

- Re-orient the receiving antenna
- Relocate the alarm control with respect to the receiver
- Move the alarm control away from the receiver
- Connect the alarm control into a different outlet so that alarm control and receiver are on different circuits.

If necessary, the user should consult the dealer or an experienced radio/television technician for additional suggestions. The user may find the following booklet prepared by the FCC helpful: "How to Identify and Resolve Radio/Television Interference Problems". This booklet is available from the U.S. Government Printing Office, Washington, D.C. 20402, Stock # 004-000-00345-4.

Wireless Notice

This equipment complies with FCC and IC radiation exposure limits set forth for an uncontrolled environment. The antenna should be installed and operated with minimum distance of 20 cm between the radiator and your body. This transmitter must not be co-located or operating in conjunction with any other antenna or transmitter.

Antenna gain must be below:

Band	TL405LE-LAT			
	2G	HSPA+	LTE FDD	Max. Antenna Gain (dBi)
B1 (2100)		X	X	2.15
B2 (1900)	X	X	X	2.15
B3 (1800)	X		X	2.15
B4 (1700)		X	X	2.15
B5 (850)	X	X	X	2.15
B7 (2600)			X	1.8
B8 (900)	X			2.15
B28 (700)			X	2.15

IMPORTANT INFORMATION

This equipment complies with Part 68 of the FCC Rules. On the side of this equipment is a label that contains, among other information, the FCC registration number and ringer equivalence number (REN) for this equipment. If requested, this number must be provided to the Telephone Company.

TL405LE-LAT Product Identifier US:F53MO00ATL405LE

REN:0.0A

USOC Jack:RJ-31X

Telephone Connection Requirements

A plug and jack used to connect this equipment to the premises wiring and telephone network must comply with the applicable FCC Part 68 rules and requirements adopted by the ACTA. A compliant telephone cord and modular plug is provided with this product. It is designed to be connected to a compatible modular jack that is also compliant. See installation instructions for details.

Ringer Equivalence Number (REN)

The REN is used to determine the number of devices that may be connected to a telephone line. Excessive RENs on a telephone line may result in the devices not ringing in response to an incoming call.

In most but not all areas, the sum of RENs should not exceed five (5.0). To be certain of the number of devices that may be connected to a line, as determined by the total RENs, contact the local Telephone Company. For products approved after July 23, 2001, the REN for this product is part of the product identifier that has the format. US: AAAEQ##TXXXX. The digits represented by ## are the REN without a decimal point (e.g., 03 is a REN of 0.3). For earlier products, the REN is separately shown on the label.

Incidence of Harm

If this equipment TL405LE-LAT causes harm to the telephone network, the telephone company will notify you in advance that temporary discontinuance of service may be required. But if advance notice is not practical, the Telephone Company will notify the customer as soon as possible. Also, you will be advised of your right to file a complaint with the FCC if you believe it is necessary.

Changes in Telephone Company Equipment or Facilities

The Telephone Company may make changes in its facilities, equipment, operations or procedures that could affect the operation of the equipment. If this happens the Telephone Company will provide advance notice in order for you to make necessary modifications to maintain uninterrupted service.

Equipment Maintenance Facility

If trouble is experienced with this equipment for repair or warranty information, please contact the facility indicated below. If the equipment is causing harm to the telephone network, the Telephone Company may request that you disconnect the equipment until the problem is solved. This equipment is of a type that is not intended to be repaired by the end user.

Tyco Atlanta Distribution Center, 2600 West Pointe Dr., Lithia Springs, GA 30122

Additional Information

Connection to party line service is subject to state tariffs. Contact the state public utility commission, public service commission or corporation commission for information.

Alarm dialling equipment must be able to seize the telephone line and place a call in an emergency situation. It must be able to do this even if other equipment (telephone, answering system, computer modem, etc.) already has the telephone line in use. To do so, alarm dialling equipment must be connected to a properly installed RJ-31X jack that is electrically in series with and ahead of all other equipment attached to the same telephone line.

Proper installation is depicted in the figure below. If you have any questions concerning these instructions, you should consult your telephone company or a qualified installer about installing the RJ-31X jack and alarm dialling equipment for you.

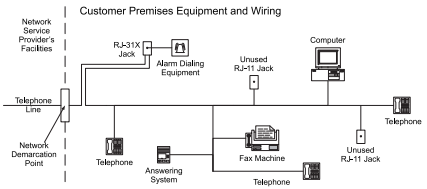

GS4015/GS4005/3G4005/TL405LE

#	Control String	Calling Number	Deactivation*
1			
2			
3			
4			
5			
6			

*) Write “Text Message” for bistable outputs or the Activation Time for monostable outputs.

Bistable Output Activation: #*User Code*Control String*=ON*
Monostable Output Activation: #*User Code*Control String*=ON*TonU*
Ton = Activation Time; U = S for seconds, M for minutes, H for hours
Output Deactivation: #*User Code*Control String*=OFF*
User Code Change: #CUC**User Code**New User Code**
Installer Enable: #ENI**User Code**
Installer Disable: #DSI**User Code**
Remote Programming Enable: #ERA**User Code**ON*
Remote Programming Disable: #ERA**User Code**OFF*
SIM Balance Check: #CCC**User Code**
SIM Expiration Check: #EDC**User Code**
SIM Expiration Change: #EDU**User Code**DD/MM/YYYY**
Serial Number Display: #RID**User Code**

© 2020 Johnson Controls. All rights reserved. JOHNSON CONTROLS, TYCO and DSC are trademarks of Johnson Controls.

Digital Security Controls
www.dsc.com

29010881R002 240820 FM14