2-Way Wireless Security Suite

v1.0 Installation Guide

Models:

PC9155-433/868
PC9155G-433/868
PC9155D-433/868

Used with:

WT5500-433/868
WT5500P-433/868

Series 2-way Wireless Keypad

TELEPERMIT
These DSC Security Alarm Systems may be connected to the Telecom Network
PTC 211 / 09 /017 PC9155-433
PTC 211 / 09 /018 PC9155D-433
PTC 211 / 09 /019 PC9155G-433
RN = 0.5

N11427

IMPORTANT: This manual contains information on limitations regarding product use and function and information on the limitations as to liability of the manufacturer. The entire manual should be carefully read.

SAFETY INSTRUCTIONS FOR SERVICE PERSONNEL

WARNING: WHEN USING EQUIPMENT CONNECTED TO THE TELEPHONE NETWORK, THERE ARE BASIC SAFETY INSTRUCTIONS THAT SHOULD ALWAYS BE FOLLOWED. REFER TO THE SAFETY INSTRUCTIONS PROVIDED WITH THIS PRODUCT; SAVE THEM FOR FUTURE REFERENCE. INSTRUCT THE END-USER REGARDING THE SAFETY PRECAUTIONS THAT SHALL BE OBSERVED WHEN OPERATING THIS EQUIPMENT.

Selecting a Suitable Location for the Alarm Controller

Use the following list as a guide to find a suitable place for this equipment:

- Locate the control panel near a telephone socket and a power outlet.
- Select a place that is free from vibration and shocks.
- Place the alarm controller on a flat, stable surface and follow the installation instructions.

Do **NOT** locate this product where persons will walk on the secondary circuit cable(s).
Do **NOT** connect the alarm controller to electrical outlets on the same circuit as large appliances.
Do **NOT** select a place that exposes your alarm controller to direct sunlight, excessive heat, moisture, vapors, chemicals or dust.
Do **NOT** install this equipment near water. (e.g., bath tub, wash bowl, kitchen/laundry sink, in a wet basement, or near swimming pools, etc.).
Do **NOT** install this equipment and its accessories in areas where there is a risk of explosion.
Do **NOT** connect this alarm controller to electrical outlets controlled by wall switches or automatic timers.
AVOID sources of radio interference.
AVOID setting up the equipment near heaters, air conditioners, ventilators, and/or refrigerators.
AVOID locating this equipment close to or on top of large metal objects (e.g., metal wall studs).

Safety Precautions Required During Installation

- **NEVER** install this equipment and/or telephone wiring during a lightning storm.
- **NEVER** touch uninsulated telephone wires or terminals unless the telephone line has been disconnected at the network interface.
- Ensure that cables are positioned so that accidents can not occur. Connected cables must not be subject to excessive mechanical strain.
- For Direct Plug-in versions, use the transformer supplied with the device.

WARNING
(Direct plug-in versions only)

THIS EQUIPMENT HAS NO MAINS ON/OFF SWITCH. THE PLUG OF THE DIRECT PLUG-IN POWER SUPPLY IS INTENDED TO SERVE AS THE DISCONNECTING DEVICE IF THE EQUIPMENT MUST BE QUICKLY DISCONNECTED. IT IS IMPERATIVE THAT ACCESS TO THE MAINS PLUG AND ASSOCIATED MAINS SOCKET/OUTLET, IS NEVER OBSTRUCTED.

IMPORTANT NOTE!

The PC9155 Alarm System shall be installed and used within an environment that provides the pollution degree max 2 and over-voltages category II NON-HAZARDOUS LOCATIONS, indoor only. The equipment is DIRECT PLUG-IN (external transformer) or PERMANENTLY CONNECTED (See Figure 2-3: Mounting & Wiring Details) and is designed to be installed, serviced and/or repaired by service persons only; [service person is defined as a person having the appropriate technical training and experience necessary to be aware of hazards to which that person may be exposed in performing a task and of measures to minimize the risks to that person or other persons]. There are no parts replaceable by the end-user within this equipment. The wiring (cables) used for installation of the Alarm System and accessories, shall be insulated with PVC, TFE, PTFE, FEP, Neoprene or Polyamide.

(a) The equipment enclosure must be secured to the building structure before operation.

(b) Internal wiring must be routed in a manner that prevents:
- Excessive strain or loosening of wire on terminal connections;
- Damage of conductor insulation

(c) Disposal of used batteries shall be made in accordance with local waste recovery and recycling regulations.

(d) Before servicing, DISCONNECT the power and telephone connection.

(e) DO NOT route any wiring over circuit boards.

(f) It is the installer's responsibility to ensure that a readily accessible disconnect device is incorporated in the building for permanently connected installations.

The power supply must be Class II, FAIL SAFE with double or reinforced insulation between the PRIMARY and SECONDARY circuit/ENCLOSURE and be an approved type acceptable to the local authorities. All national wiring rules shall be observed.

Guidelines for Locating Smoke & CO Detectors

The following information is for general guidance only and it is recommended that local fire codes and regulations be consulted when locating and installing smoke alarms and CO Alarms.

Smoke Detectors

Research indicates that all hostile fires in homes generate smoke to a greater or lesser extent. Detectable quantities of smoke precede detectable levels of heat in most cases. Smoke alarms should be installed outside of each sleeping area and on each storey of the home.

DSC recommends that additional smoke alarms beyond those required for minimum protection be installed. Additional areas that should be protected include: the basement; bedrooms, especially where smokers sleep; dining rooms; furnace and utility rooms; and any hallways not protected by the required units.

On smooth ceilings, detectors may be spaced 9.1m (30 feet) apart as a guide. Other spacing may be required depending on ceiling height, air movement, the presence of joists, uninsulated ceilings, etc. Consult National Fire Alarm Code NFPA 72, CAN/ULC-S553-M86 or other appropriate national standards for installation recommendations.

- Do not locate smoke detectors at the top of peaked or gabled ceilings; dead air space in these locations may prevent smoke detection.
- Avoid areas with turbulent air flow, such as near doors, fans or windows. Rapid air movement around the detector may prevent smoke from entering the unit.
- Do not locate detectors in areas of high humidity.
- Do not locate detectors in areas where the temperature rises above 38°C (100°F) or falls below 5°C (41°F).
- Smoke detectors should always be installed in accordance with NFPA 72, the National Fire Alarm Code. Smoke detectors should always be located in accordance with:

'*Smoke detectors shall be installed outside of each separate sleeping area in the immediate vicinity of the bedrooms and on each additional storey of the family living unit, including basements and excluding crawl spaces and unfinished attics. In new construction, a smoke detector also shall be installed in each sleeping room'.'Split level arrangement: Smoke detectors are required where shown. Smoke detectors are optional where a door is not provided between living room and recreation room*

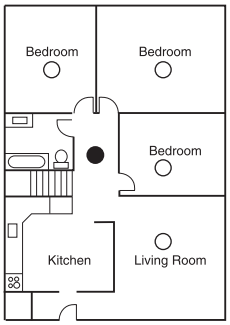

Figure 1

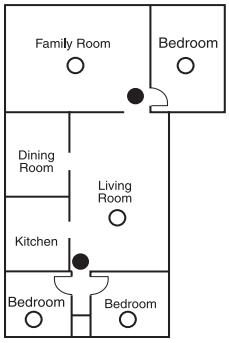

Figure 2

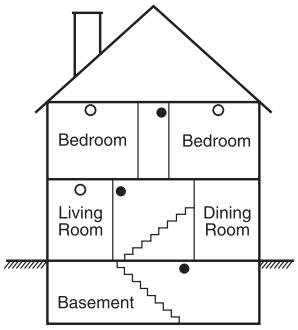

Figure 3

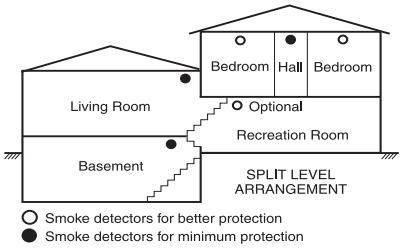

Figure 3a

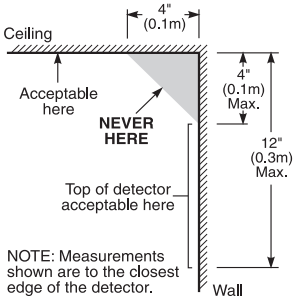

Figure 4

CO Detectors

CO gas moves freely in the air. Suggested locations are in or as near as possible to sleeping areas of the home. The human body is most vulnerable to the effects of CO gas during sleeping hours. For maximum protection, a CO alarm should be located outside primary sleeping areas or on each level of your home. Figure 5 indicates the suggested locations in the home. The electronic sensor detects carbon monoxide, measures the concentration and sounds a loud alarm before a potentially harmful level is reached.

Do **NOT** place the CO alarm in the following areas:

- Where the temperature may drop below -10ºC or exceed 40 ºC.
- Near paint thinner fumes
- Within 5 feet (1.5 meter) of open flame appliances such as furnaces, stoves and fireplaces
- In exhaust streams from gas engines, vents, flues or chimneys
- Do not place in close proximity to an automobile exhaust pipe; this will damage the detector

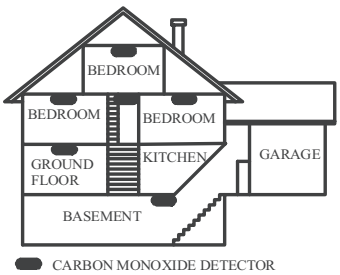

Figure 5

Limited Warranty

Digital Security Controls warrants the original purchaser that for a period of twelve months from the date of purchase, the product shall be free of defects in materials and workmanship under normal use. During the warranty period, Digital Security Controls shall, at its option, repair or replace any defective product upon return of the product to its factory, at no charge for labour and materials. Any replacement and/or repaired parts are warranted for the remainder of the original warranty or ninety (90) days, whichever is longer. The original purchaser must promptly notify Digital Security Controls in writing that there is defect in material or workmanship, such written notice to be received in all events prior to expiration of the warranty period. There is absolutely no warranty on software and all software products are sold as a user license under the terms of the software license agreement included with the product. The Customer assumes all responsibility for the proper selection, installation, operation and maintenance of any products purchased from DSC. Custom products are only warranted to the extent that they do not function upon delivery. In such cases, DSC can replace or credit at its option.

International Warranty

The warranty for international customers is the same as for any customer within Canada and the United States, with the exception that Digital Security Controls shall not be responsible for any customs fees, taxes, or VAT that may be due.

Warranty Procedure

To obtain service under this warranty, please return the item(s) in question to the point of purchase. All authorized distributors and dealers have a warranty program. Anyone returning goods to Digital Security Controls must first obtain an authorization number. Digital Security Controls will not accept any shipment whatsoever for which prior authorization has not been obtained.

Conditions to Void Warranty

This warranty applies only to defects in parts and workmanship relating to normal use. It does not cover:

- damage incurred in shipping or handling;
- damage caused by disaster such as fire, flood, wind, earthquake or lightning;
- damage due to causes beyond the control of Digital Security Controls such as excessive voltage, mechanical shock or water damage;
- damage caused by unauthorized attachment, alterations, modifications or foreign objects;
- damage caused by peripherals (unless such peripherals were supplied by Digital Security Controls Ltd.);
- defects caused by failure to provide a suitable installation environment for the products;
- damage caused by use of the products for purposes other than those for which it was designed;
- damage from improper maintenance;
- damage arising out of any other abuse, mishandling or improper application of the products.

Items Not Covered by Warranty

In addition to the items which void the Warranty, the following items shall not be covered by Warranty: (i) freight cost to the repair centre; (ii) products which are not identified with DSC's product label and lot number or serial number; (iii) products disassembled or repaired in such a manner as to adversely affect performance or prevent adequate inspection or testing to verify any warranty claim. Access cards or tags returned for replacement under warranty will be credited or replaced at DSC's option. Products not covered by this warranty, or otherwise out of warranty due to age, misuse, or damage shall be evaluated, and a repair estimate shall be provided. No repair work will be performed until a valid purchase order is received from the Customer and a Return Merchandise Authorization number (RMA) is issued by DSC's Customer Service.

Digital Security Controls Ltd.'s liability for failure to repair the product under this warranty after a reasonable number of attempts will be limited to a replacement of the product, as the exclusive remedy for breach of warranty. Under no circumstances shall Digital Security Controls be liable for any special, incidental, or consequential damages based upon breach of warranty, breach of contract, negligence, strict liability, or any other legal theory. Such damages include, but are not limited to, loss of profits, loss of the product or any associated equipment, cost of capital, cost of substitute or replacement equipment, facilities or services, down time, purchaser's time, the claims of third parties, including customers, and injury to property. The laws of some jurisdictions limit or do not allow the disclaimer of consequential damages. If the laws of such a jurisdiction apply to any claim by or against DSC, the limitations and disclaimers contained here shall be to the greatest extent permitted by law. Some states do not allow the exclusion or limitation of incidental or consequential damages, so that the above may not apply to you.

Disclaimer of Warranties

This warranty contains the entire warranty and shall be in lieu of any and all other warranties, whether expressed or implied (including all implied warranties of merchantability or fitness for a particular purpose) and of all other obligations or liabilities on the part of Digital Security Controls. Digital Security Controls neither assumes responsibility for, nor authorizes any other person purporting to act on its behalf to modify or to change this warranty, nor to assume for it any other warranty or liability concerning this product. This disclaimer of warranties and limited warranty are governed by the laws of the province of Ontario, Canada.

WARNING: Digital Security Controls recommends that the entire system be completely tested on a regular basis. However, despite frequent testing, and due to, but not limited to, criminal tampering or electrical disruption, it is possible for this product to fail to perform as expected.

Out of Warranty Repairs

Digital Security Controls will at its option repair or replace out-of-warranty products which are returned to its factory according to the following conditions. Anyone returning goods to Digital Security Controls must first obtain an authorization number. Digital Security Controls will not accept any shipment whatsoever for which prior authorization has not been obtained.

Products which Digital Security Controls determines to be repairable will be repaired and returned. A set fee which Digital Security Controls has predetermined and which may be revised from time to time, will be charged for each unit repaired.

Products which Digital Security Controls determines not to be repairable will be replaced by the nearest equivalent product available at that time. The current market price of the replacement product will be charged for each replacement unit.

WARNING - READ CAREFULLY

Note to Installers

This warning contains vital information. As the only individual in contact with system users, it is your responsibility to bring each item in this warning to the attention of the users of this system.

System Failures

This system has been carefully designed to be as effective as possible. There are circumstances, however, involving fire, burglary, or other types of emergencies where it may not provide protection. Any alarm system of any type may be compromised deliberately or may fail to operate as expected for a variety of reasons. Some but not all of these reasons may be:

• Inadequate Installation

A security system must be installed properly in order to provide adequate protection. Every installation should be evaluated by a security professional to ensure that all access points and areas are covered. Locks and latches on windows and doors must be secure and operate as intended. Windows, doors, walls, ceilings and other building materials must be of sufficient strength and construction to provide the level of protection expected. A reevaluation must be done during and after any construction activity. An evaluation by the fire and/or police department is highly recommended if this service is available.

• Criminal Knowledge

This system contains security features which were known to be effective at the time of manufacture. It is possible for persons with criminal intent to develop techniques which reduce the effectiveness of these features. It is important that a security system be reviewed periodically to ensure that its features remain effective and that it be updated or replaced if it is found that it does not provide the protection expected.

• Access by Intruders

Intruders may enter through an unprotected access point, circumvent a sensing device, evade detection by moving through an area of insufficient coverage, disconnect a warning device, or interfere with or prevent the proper operation of the system.

• Power Failure

Control units, intrusion detectors, smoke detectors and many other security devices require an adequate power supply for proper operation. If a device operates from batteries, it is possible for the batteries to fail. Even if the batteries have not failed, they must be charged, in good condition and installed correctly. If a device operates only by AC power, any interruption, however brief, will render that device inoperative while it does not have power. Power interruptions of any length are often accompanied by voltage fluctuations which may damage electronic equipment such as a security system. After a power interruption has occurred, immediately conduct a complete system test to ensure that the system operates as intended.

• Failure of Replaceable Batteries

This system's wireless transmitters have been designed to provide several years of battery life under normal conditions. The expected battery life is a function of the device environment, usage and type. Ambient conditions such as high humidity, high or low temperatures, or large temperature fluctuations may reduce the expected battery life. While each transmitting device has a low battery monitor which identifies when the batteries need to be replaced, this monitor may fail to operate as expected. Regular testing and maintenance will keep the system in good operating condition.

• Compromise of Radio Frequency (Wireless) Devices

Signals may not reach the receiver under all circumstances which could include metal objects placed on or near the radio path or deliberate jamming or other inadvertent radio signal interference.

• System Users

A user may not be able to operate a panic or emergency switch possibly due to permanent or temporary physical disability, inability to reach the device in time, or unfamiliarity with the correct operation. It is important that all system users be trained in the correct operation of the alarm system and that they know how to respond when the system indicates an alarm.

• Smoke Detectors

Smoke detectors that are a part of this system may not properly alert occupants of a fire for a number of reasons, some of which follow. The smoke detectors may have been improperly installed or positioned. Smoke may not be able to reach the smoke detectors, such as when the fire is in a chimney, walls or roofs, or on the other side of closed doors. Smoke detectors may not detect smoke from fires on another level of the residence or building.

Every fire is different in the amount of smoke produced and the rate of burning. Smoke detectors cannot sense all types of fires equally well. Smoke detectors may not provide timely warning of fires caused by carelessness or safety hazards such as smoking in bed, violent explosions, escaping gas, improper storage of flammable materials, overloaded electrical circuits, children playing with matches or arson.

Even if the smoke detector operates as intended, there may be circumstances when there is insufficient warning to allow all occupants to escape in time to avoid injury or death.

• Motion Detectors

Motion detectors can only detect motion within the designated areas as shown in their respective installation instructions. They cannot discriminate between intruders and intended occupants. Motion detectors do not provide volumetric area protection. They have multiple beams of detection and motion can only be detected in unobstructed areas covered by these beams. They cannot detect motion which occurs behind walls, ceilings, floor, closed doors, glass partitions, glass doors or windows. Any type of tampering whether intentional or unintentional such as masking, painting, or spraying of any material on the lenses, mirrors, windows or any other part of the detection system will impair its proper operation.

Passive infrared motion detectors operate by sensing changes in temperature. However their effectiveness can be reduced when the ambient temperature rises near or above body temperature or if there are intentional or unintentional sources of heat in or near the detection area. Some of these heat sources could be heaters, radiators, stoves, barbeques, fireplaces, sunlight, steam vents, lighting and so on.

• Warning Devices

Warning devices such as sirens, bells, horns, or strobes may not warn people or waken someone sleeping if there is an intervening wall or door. If warning devices are located on a different level of the residence or premise, then it is less likely that the occupants will be alerted or awakened. Audible warning devices may be interfered with by other noise sources such as stereos, radios, televisions, air conditioners or other appliances, or passing traffic. Audible warning devices, however loud, may not be heard by a hearing-impaired person.

• Telephone Lines

If telephone lines are used to transmit alarms, they may be out of service or busy for certain periods of time. Also an intruder may cut the telephone line or defeat its operation by more sophisticated means which may be difficult to detect.

• Insufficient Time

There may be circumstances when the system will operate as intended, yet the occupants will not be protected from the emergency due to their inability to respond to the warnings in a timely manner. If the system is monitored, the response may not occur in time to protect the occupants or their belongings.

• Component Failure

Although every effort has been made to make this system as reliable as possible, the system may fail to function as intended due to the failure of a component.

• Inadequate Testing

Most problems that would prevent an alarm system from operating as intended can be found by regular testing and maintenance. The complete system should be tested weekly and immediately after a break-in, an attempted break-in, a fire, a storm, an earthquake, an accident, or any kind of construction activity inside or outside the premises. The testing should include all sensing devices, keypads, consoles, alarm indicating devices and any other operational devices that are part of the system.

•Security and Insurance

Regardless of its capabilities, an alarm system is not a substitute for property or life insurance. An alarm system also is not a substitute for property owners, renters, or other occupants to act prudently to prevent or minimize the harmful effects of an emergency situation.

IMPORTANT - READ CAREFULLY: DSC Software purchased with or without Products and Components is copyrighted and is purchased under the following license terms:

- This End-User License Agreement ("EULA") is a legal agreement between **You** (the company, individual or entity who acquired the Software and any related Hardware) and **Digital Security Controls, a division of Tyco Safety Products Canada Ltd.** ("DSC"), the manufacturer of the integrated security systems and the developer of the software and any related products or components ("HARDWARE") which You acquired.
- If the DSC software product ("SOFTWARE PRODUCT" or "SOFTWARE") is intended to be accompanied by HARDWARE, and is NOT accompanied by new HARDWARE, You may not use, copy or install the SOFTWARE PRODUCT. The SOFTWARE PRODUCT includes computer software, and may include associated media, printed materials, and "online" or electronic documentation.
- Any software provided along with the SOFTWARE PRODUCT that is associated with a separate end-user license agreement is licensed to You under the terms of that license agreement.
- By installing, copying, downloading, storing, accessing or otherwise using the SOFTWARE PRODUCT, You agree unconditionally to be bound by the terms of this EULA, even if this EULA is deemed to be a modification of any previous arrangement or contract. If You do not agree to the terms of this EULA, DSC is unwilling to license the SOFTWARE PRODUCT to You, and You have no right to use it.

SOFTWARE PRODUCT LICENSE

The SOFTWARE PRODUCT is protected by copyright laws and international copyright treaties, as well as other intellectual property laws and treaties. The SOFTWARE PRODUCT is licensed, not sold.

1.GRANT OF LICENSE This EULA grants You the following rights:

(a) **Software Installation and Use** - For each license You acquire, You may have only one copy of the SOFTWARE PRODUCT installed.

(b) **Storage/Network Use** - The SOFTWARE PRODUCT may not be installed, accessed, displayed, run, shared or used concurrently on or from different computers, including a workstation, terminal or other digital electronic device ("Device"). In other words, if You have several workstations, You will have to acquire a license for each workstation where the SOFTWARE will be used.

(c) **Backup Copy** - You may make back-up copies of the SOFTWARE PRODUCT, but You may only have one copy per license installed at any given time. You may use the back-up copy solely for archival purposes. Except as expressly provided in this EULA, You may not otherwise make copies of the SOFTWARE PRODUCT, including the printed materials accompanying the SOFTWARE.

2. DESCRIPTION OF OTHER RIGHTS AND LIMITATIONS

(a) **Limitations on Reverse Engineering, Decompilation and Disassembly** - You may not reverse engineer, decompile, or disassemble the SOFTWARE PRODUCT, except and only to the extent that such activity is expressly permitted by applicable law notwithstanding this limitation. You may not make any changes or modifications to the Software, without the written permission of an officer of DSC. You may not remove any proprietary notices, marks or labels from the Software Product. You shall institute reasonable measures to ensure compliance with the terms and conditions of this EULA.

(b) **Separation of Components** - The SOFTWARE PRODUCT is licensed as a single product. Its component parts may not be separated for use on more than one HARDWARE unit.

(c) **Single INTEGRATED PRODUCT** - If You acquired this SOFTWARE with HARDWARE, then the SOFTWARE PRODUCT is licensed with the HARDWARE as a single integrated product. In this case, the SOFTWARE PRODUCT may only be used with the HARDWARE as set forth in this EULA.

(d) **Rental** - You may not rent, lease or lend the SOFTWARE PRODUCT. You may not make it available to others or post it on a server or web site.

(e) **Software Product Transfer** - You may transfer all of Your rights under this EULA only as part of a permanent sale or transfer of the HARDWARE, provided You retain no copies, You transfer all of the SOFTWARE PRODUCT (including all component parts, the media and printed materials, any upgrades and this EULA), and provided the recipient agrees to the terms of this EULA. If the SOFTWARE PRODUCT is an upgrade, any transfer must also include all prior versions of the SOFTWARE PRODUCT.

(f) **Termination** - Without prejudice to any other rights, DSC may terminate this EULA if You fail to comply with the terms and conditions of this EULA. In such event, You must destroy all copies of the SOFTWARE PRODUCT and all of its component parts.

(g) **Trademarks** - This EULA does not grant You any rights in connection with any trademarks or service marks of DSC or its suppliers.

3. COPYRIGHT - All title and intellectual property rights in and to the SOFTWARE PRODUCT (including but not limited to any images, photographs, and text incorporated into the SOFTWARE PRODUCT), the accompanying printed materials, and any copies of the SOFTWARE PRODUCT, are owned by DSC or its suppliers. You may not copy the printed materials accompanying the SOFTWARE PRODUCT. All title and intellectual property rights in and to the content which may be accessed through use of the SOFTWARE PRODUCT are the property of the respective content owner and may be protected by applicable copyright or other intellectual property laws and treaties. This EULA grants You no rights to use such content. All rights not expressly granted under this EULA are reserved by DSC and its suppliers.

4. EXPORT RESTRICTIONS - You agree that You will not export or re-export the SOFTWARE PRODUCT to any country, person, or entity subject to Canadian export restrictions.

5. CHOICE OF LAW - This Software License Agreement is governed by the laws of the Province of Ontario, Canada.

6. ARBITRATION - All disputes arising in connection with this Agreement shall be determined by final and binding arbitration in accordance with the Arbitration Act, and the parties agree to be bound by the arbitrator's decision. The place of arbitration shall be Toronto, Canada, and the language of the arbitration shall be English.

7. LIMITED WARRANTY

(a) **NO WARRANTY** - DSC PROVIDES THE SOFTWARE "AS IS" WITHOUT WARRANTY. DSC DOES NOT WARRANT THAT THE SOFTWARE WILL MEET YOUR REQUIREMENTS OR THAT OPERATION OF THE SOFTWARE WILL BE UNINTERRUPTED OR ERROR-FREE.

(b) **CHANGES IN OPERATING ENVIRONMENT -** DSC shall not be responsible for problems caused by changes in the operating characteristics of the HARDWARE, or for problems in the interaction of the SOFTWARE PRODUCT with non-DSC-SOFTWARE or HARDWARE PRODUCTS.

(c) **LIMITATION OF LIABILITY; WARRANTY REFLECTS ALLOCATION OF RISK** - IN ANY EVENT, IF ANY STATUTE IMPLIES WARRANTIES OR CONDITIONS NOT STATED IN THIS LICENSE AGREEMENT, DSC'S ENTIRE LIABILITY UNDER ANY PROVISION OF THIS LICENSE AGREEMENT SHALL BE LIMITED TO THE GREATER OF THE AMOUNT ACTUALLY PAID BY YOU TO LICENSE THE SOFTWARE PRODUCT AND FIVE CANADIAN DOLLARS (CAD$5.00). BECAUSE SOME JURISDICTIONS DO NOT ALLOW THE EXCLUSION OR LIMITATION OF LIABILITY FOR CONSEQUENTIAL OR INCIDENTAL DAMAGES, THE ABOVE LIMITATION MAY NOT APPLY TO YOU.

(d) **DISCLAIMER OF WARRANTIES** - THIS WARRANTY CONTAINS THE ENTIRE WARRANTY AND SHALL BE IN LIEU OF ANY AND ALL OTHER WARRANTIES, WHETHER EXPRESSED OR IMPLIED (INCLUDING ALL IMPLIED WARRANTIES OF MERCHANTABILITY OR FITNESS FOR A PARTICULAR PURPOSE) AND OF ALL OTHER OBLIGATIONS OR LIABILITIES ON THE PART OF DSC. DSC MAKES NO OTHER WARRANTIES. DSC NEITHER ASSUMES NOR AUTHORIZES ANY OTHER PERSON PURPORTING TO ACT ON ITS BEHALF TO MODIFY OR TO CHANGE THIS WARRANTY, NOR TO ASSUME FOR IT ANY OTHER WARRANTY OR LIABILITY CONCERNING THIS SOFTWARE PRODUCT.

(e) **EXCLUSIVE REMEDY AND LIMITATION OF WARRANTY -** UNDER NO CIRCUMSTANCES SHALL DSC BE LIABLE FOR ANY SPECIAL, INCIDENTAL, CONSEQUENTIAL OR INDIRECT DAMAGES BASED UPON BREACH OF WARRANTY, BREACH OF CONTRACT, NEGLIGENCE, STRICT LIABILITY, OR ANY OTHER LEGAL THEORY. SUCH DAMAGES INCLUDE, BUT ARE NOT LIMITED TO, LOSS OF PROFITS, LOSS OF THE SOFTWARE PRODUCT OR ANY ASSOCIATED EQUIPMENT, COST OF CAPITAL, COST OF SUBSTITUTE OR REPLACEMENT EQUIPMENT, FACILITIES OR SERVICES, DOWN TIME, PURCHASERS TIME, THE CLAIMS OF THIRD PARTIES, INCLUDING CUSTOMERS, AND INJURY TO PROPERTY.

WARNING: DSC recommends that the entire system be completely tested on a regular basis. However, despite frequent testing, and due to, but not limited to, criminal tampering or electrical disruption, it is possible for this SOFTWARE PRODUCT to fail to perform as expected.

Table of Contents

Chapter	Description	Page
1.	Introduction	1-1
1.1	PC9155 Model Differences	1-1
1.2	Specifications	1-1
1.3	Controls & Indicators	1-2
1.4	Data Entry	1-2
2.	Installation	2-1
2.1	Hardware Installation	2-1
2.2	Wiring	2-3
2.3	Wireless Device Enrollment	2-4
2.4	Global Wireless Device Placement Test	2-7
2.5	Individual Wireless Device Placement Test	2-7
2.6	GPRS/Ethernet Initialization	2-8
3.	Operation	3-1
3.1	Operating Modes	3-1
3.2	Language Selection	3-1
3.3	[*] Commands	3-1
3.4	Function Keys	3-4
4.	Programming	4-1
4.1	Template Programming	4-1
4.2	DLS Programming	4-4
4.3	Installer Programming	4-4
5.	Installer Programming	5-1
5.1	Index to Programming Options	5-1
5.2	Programming Worksheets	5-2
5.3	Programming Descriptions	5-24
6.	Testing & Troubleshooting	6-1
6.1	Wireless Device Placement Test	6-1
6.2	Testing the System	6-1
6.3	Resetting the System to Factory Defaults	6-2
6.4	Troubleshooting	6-2
6.5	Battery Removal/Replacement	6-5
Appendix A:	Reporting Code Formats	APP-1
Appendix B:	Communicator Format Options	APP-5
Appendix C:	2-Way Audio Verification (PC5950)	APP-6
Appendix D:	Regulatory Approvals Information	APP-6

1 Introduction

This manual provides installation and programming information for the PC9155 two-way wireless series of alarm panels. The PC9155 is a two-way wireless alarm system that can interface with one-way and two-way RF devices. Three separate hardware platforms exist for the 433 MHz and 868 MHz versions.

1.1 PC9155 Model Differences

Models with a 'G' in the suffix have a GS2065 module installed. The GS2065 module is a GSM (Global System for Mobile communications) wireless cell communicator that communicates with a GPRS (General Packet Radio Services) global network that can be programmed as the primary or backup communicator.

Models with a 'D' in the suffix have a TL265GS module installed. The TL265GS module combines the dual functionality of the GS2065 wireless cell communicator and T-Link TCP/IP Ethernet/Internet communicator. Either function can be programmed as the primary or backup communicator.

All models can communicate via telephone (PSTN) in addition to cell and Internet described above. Refer to the associated installation guide for programming of the GS2065 and TL265GS modules.

Table 1-1 PC9155 Models

Model	Operating Frequency	GS2065	TL265GS
PC9155-433	433.92MHz	✖	✖
PC9155-868	868.35MHz	✖	✖
PC9155G-433	433.92MHz	✓	✖
PC9155G-868	868.35MHz	✓	✖
PC9155D-433	433.92MHz	✖	✓
PC9155D-868	868.35MHz	✖	✓

Note: Only Models PC9155-433, PC9155D-433 and PC9155G-433 are UL/ULC listed

1.2 Specifications

Table 1-2 Specifications

Specifications
Temperature Range.....0°C-49°C (32°F - 120°F)
Humidity.....93%RH Non Condensing
Power Supply.....16.5Vac/20VA @50/60Hz
Current Draw (panel)
240 VAC Primary .....57mA(AC)(Max)
120 VAC Primary .....114mA(AC)(Max)
16.5 VAC Secondary .....855mA(AC)(Max)
Current Draw (panel) Battery Only
Standby.....90mA Max
Transmit (GPRS/Ethernet Module).....330mA Max
Battery Capacity 12VDC 2.3Ah
Charging Rate.....240mA. (12Hrs Max)
Backup Time (No Aux).....24Hr
Aux+
Voltage..... 9.6-13.8VDC
Current..... 200 mA Max
PGM 1&2 Output Current .....50mA (ea.)
Note: Aux and PGM outputs share the 200mA load.
Wireless Transceiver
Operating Frequency Panel.....433.92 MHz/868.35 MHZ
Dimensions:
PC9155.....H10.5 x W8.5 x D 2.3 in
WT5500 ..... H4.9 x W6.5 x D 1.25 in
with wall bracket ..... H4.9 x W6.5 x D 1.5 in
Weight
PC9155 NA..... 4.1 lb. (1.830Kg)
PC9155 EU (Internal Transformer)..... 5.1 lb. (2.275Kg)
WT5500 ..... 1.0 lb. (0.454Kg)
Out of the Box:
PC9155
RJ31-x Telephone (NA only)
Transformer: NA external, EU internal
Mounting Hardware Kit
Installation, Keypad & User manuals.....Qty (1) ea.
One-way, Two-way Device Installation sheets...as required

Table 1-3 Compatible Wireless Devices

Compatible Wireless Devices		
WS, WLS, EV prefixes indicate one-way wireless device. WT prefix indicates two-way wireless device.		
Descriptions	PC9155x-433	PC9155x-868
Wireless Keypads	ULWT5500-433 ULWT5500P-433	WT5500-868 WT5500P-868
Proximity Tag	ULPT4	PT8
Door Contacts	ULWS4945 ULWS4965 **WS4975 EV-DW4955 ***EV-DW4975	WS8945 WS8965 WS8975
Motion Detectors	ULWS4904 ULWS4904P ULWLS914-433	WS8904 WS8904P
Smoke Detector	ULWS4916 ULWS4926	WS8916
CO (Carbon Monoxide) Detector	WS4913	WS8913
Flood Detector	WS4985	WS8985
Glass Break Detectors	ULWLS912L-433	
Shock Detector	EV-DW4927	
Wireless Sirens Indoor Outdoor	ULWT4901 ULWT4911	WT8901 WT8911
Wireless Keys	ULWS4939 WS4949 WS4959 WS4969 WS4979 ULWT4989	WS8939 WT8989
Panic Pendants	ULWS4938 ULWS4938-2W	WS8938
Hold-up	WLS928-433	
Only ULapproved devices are to be used with listed systems. **Not available in North America, South America and New Zealand ***Available in North America, South America and New Zealand only		

Note: For SIA CP-01 compliant installations the minimum required components are: PC9155-433 Control Panel and WT5500-433 Keypad. Optional components that can be used with the system are: TL265GS, GS2065, WT5500P-433, PT4, WT4989 and WT4901.

1.3 Controls & Indicators

The PC9155 can have a maximum of eight status indicators located on the front panel. The four indicators located on the left side of the panel indicate the Ready status, Armed status, Trouble status and AC Power status of the alarm system. The four indicators are located on the right side of the panel only if a GS2065 or TL265GS module is installed. These indicate Communicator Trouble status, Network status (TL265GS only), and High or Low signal strength.

Table 1-4 Controls & Indicators - Alarm Panel

Alarm Indicators	GPRS/Ethernet Module Indicators
Ready: Panel is ready to be armed.	**Communicator Trouble:** Enter [✱][2] to view troubles.
Armed: Panel is armed.	**Network:** Internet communication absent.
Trouble: Enter [✱][2] to view troubles. Yellow indicates trouble. Orange indicates RF Jam trouble.	**Signal Strength (High):** GPRS signal strength is high.
AC Power: On=AC present. OFF=AC absent	**Signal Strength:** (**Low**): GPRS signal strength is low.

Figure 1-1 Controls & Indicators - Keypad

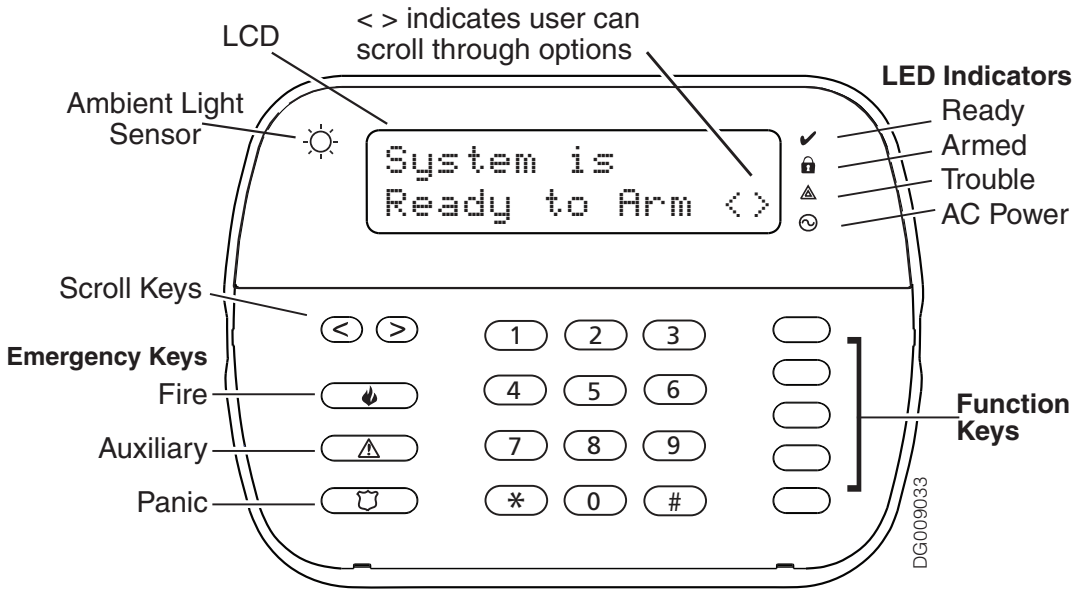

1.4 Data Entry

Conventions Used

Brackets '[ ]' indicate numbers or symbols that are to be entered on the keypad.

E.g., [✱][**8**][Installer Code][898] requires the following key enteries: [✱] [8] [5] [5] [5] [5] [8] [9] [8]

[✱] indicates to the alarm system that a special command will be entered.

[8] places the alarm system in Installer Programming mode.

[5] [5] [5] [5] is the default installer code. The default installer code should be changed when programming the system.

[8] [9] [8] indicates the particular programming section being accessed.

E.g. **[898]** Wireless Device Enrollment

[899] Template Programming

[999] Alarm System Default

Entering Letters

Some commands require the entry of letters (i.e., A, B, C, D, E, F).

To enter a letter, press [*] and the number on the keypad that corresponds to the appropriate letter, as indicated below.

1 = A	4 = D
2 = B	5 = E
3 = C	6 = F

The cursor will blink to indicate that you are entering letters. To revert back to numeric entry press [*].

Incorrect Data Entries:

To change a data entry before it has been accepted by the alarm system, use the scroll keys to reposition the cursor then re-enter the digit. If the data has already been accepted by the system, press [#] to exit the section then re-enter the programming section and enter the data again.
If you incorrectly enter 0001 in Step 2 of ***Program alarm system*** in Template Programming, you must either reset the alarm system to its default values (section. [996], re-enroll all wireless devices and re-program the system) or re-enter the correct data in Installer Programming [✱][8].

Special Keys:

Scroll symbols ⟨ ⟩ on the display indicate that there are options you can view by pressing the [<] [>] keys. These scroll keys can also be used to position the cursor.

The [*] key is similar in function to the 'ENTER' key on a personal computer. It is generally used to accept the existing programming option. It is also the first key entry for [✱] commands and can be used to enter the letters A-F when in Installer Programming mode.

The [#] key functions similarly to the 'ESCAPE' key on a personal computer. It is generally used to exit the current programming section or to return to the previous menu.

2 Installation

2.1 Hardware Installation

Hardware Installation

Step 1

Select a suitable location for the alarm panel in a dry location, close to an unswitched AC outlet, phone line (if required), and Ethernet cable (if required). DO NOT mount system on an electrical box. Position system away from metal objects (e.g., appliances, furnace, duct work etc.).

Step 2

Gently pry the front cover from the chassis using a small slotted screwdriver in the slots provided.

Step 3

- Remove the battery by depressing the plastic battery retainer on the right side of the battery with thumb to free the battery from the housing.

  Caution: Before installation or operation, remove and dispose of the plastic bag covering the battery.
- If required, connect the battery cable to the battery connector on the PC board.
- Remove the terminal protection from the battery.
- Install the battery cable on the battery spade lug terminals [(+)Red, (-)Black).
- To install, slide the left side of the battery [(+) terminal] under the left battery retaining bracket.
- Insert a slot screwdriver between the battery and right retaining bracket. Lever the right retaining bracket to the right while pressing the battery firmly in place.

Step 4

- Route wiring through the channels provided to the wiring access hole. See Figure 2-3.
- Secure unit to wall using the mounting holes provided.

i

For PC9155 models equipped with an internal transformer, route AC wiring through the AC wiring guide then through the access hole adjacent to the internal transformer. Secure the AC line and neutral (N) wiring to the fused side of the terminal block as indicated.
For PC9155D models, route the RJ-45 terminated CAT5 Ethernet cable through the wiring guide then through the wiring access hole and connect to the RJ-45 jack located on the TL265GS module.
Ethernet communication lines must be connected to an approved (acceptable to local authorities) type NID (Network Interface Device) before leaving the premises (e.g., UL Installations, UL60950 listed NID).
If required remove/replace existing coaxial cable and connect TL265GS/GS2065 to an external antenna.

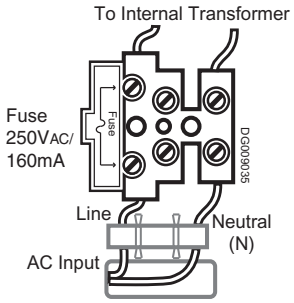

Figure 2-1 AC Fuse Block

Figure 2-2 GPRS/Ethernet Module Wiring Details

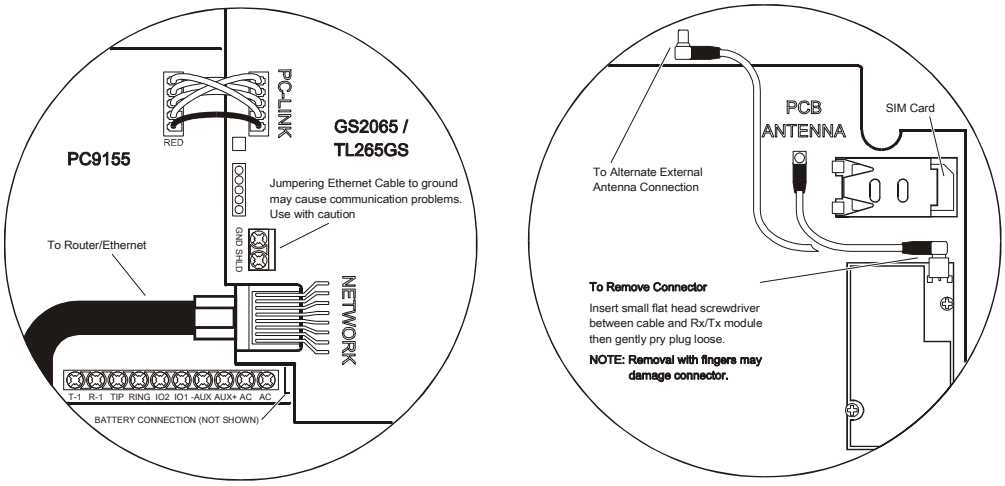

Figure 2-3 Mounting & Wiring Details

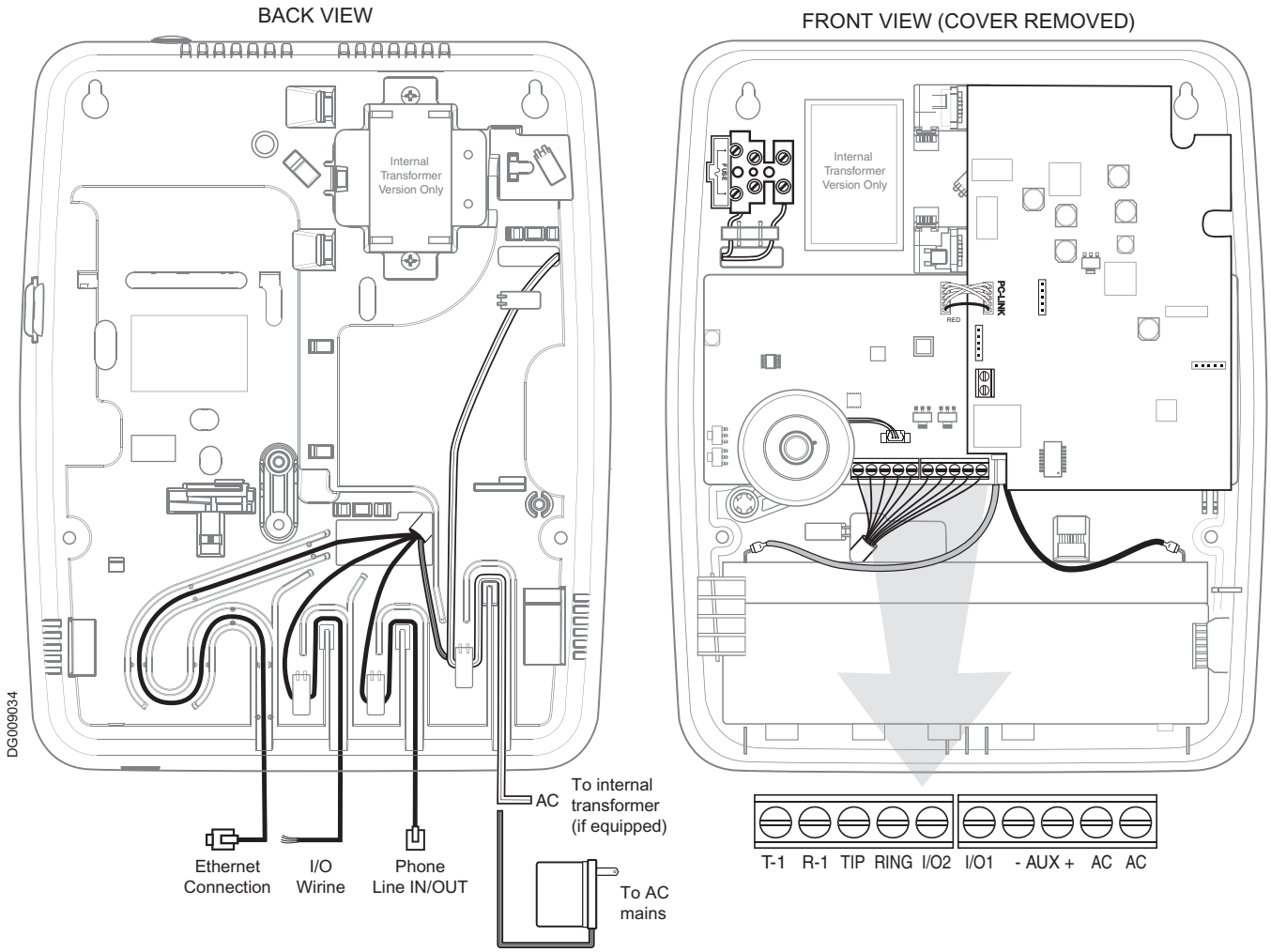

CAUTION: The Ethernet communication lines must be connected first to an Approved (acceptable to the local authorities) type NID (Network Interface Device) before leaving the premises (e.g., UL installations, UL60950 Listed NID).

Phone Line	T1-Brn	Connects to in-house phone line	PC9155 — Telephone: T-1 R-1 Tip Ring; I/O: 2 1; Aux: – +; AC
	R1- Gra	Connects to in-house phone line	
	Tip - Grn	Connects to outside phone Line. Allows system to seize the phone line from devices connected to T1-R1	
	Ring - Red	Connects to outside phone Line. Allows system to seize the phone line from devices connected to T1-R1	
I/O	I/O - 1	Can be configured as a PGM output (50mA) or hard wired zone input (Zone 33)	
	I/O - 2	Can be configured as a PGM output (50mA) or hard wired zone input (Zone 34)	
Aux	Aux -	Provides common connection for hard-wired zones and Aux+ power	
	Aux +	Provides +12VDC, 200mA (Max.) for PGMs and modules	
AC	~	Connects directly to external 16.5VAC transformer or fused internal transformer	
	~	Connects directly to external 16.5VAC transformer or fused internal transformer	

2.2 Wiring

1. I/O Wiring

The two I/O terminals can be programmed as hard-wired zone inputs and/or PGM outputs. See programming section [013] Opt [1,2].

1a. Zone Wiring

Zones 1 - 32 are reserved for wireless zones. If programmed as zone inputs, I/O-1 is zone 33 and I/O-2 is zone 34.
Zones can be wired for Normally Open (NO) contacts with single-end-of-line resistors or Normally Closed (NC) contacts with single-end-of-line or double-end-of-line resistors.

Observe the following guidelines.

- For UL/ULC listed installations use SEOL or DEOL only
- Use minimim 22AWG, maximum 18 AWG wire
- DO NOT use shielded wire
- Wire run resistance shall not exceed 100 Ω

Burglary Zone Wiring Chart			
Wire Size		Max wire length to end-of-line resistor	
AWG	mm	Feet	Meters
22	0.65	3000	914
20	0.81	4900	1493
19	0.91	6200	1889
18	1.02	7800	2377

Figures are based on maximum wiring resistance of 100 Ω

Zones 33 and 34 are defaulted for SEOL resistors

- Programming section [133]-[134] opt.[14] selects Normally Closed or Normally Open
- Programming section [133-[134] opt.[15] selects SEOL resistors
- Programming section [133]-[134] opt.[16] selects DEOL resistors

Zone Status - Loop Resistance/Loop Status (DEOL only)

- **Fault** - 0Ω (shorted wire/loop)(shorted wire to 4.5KOhm)
- **Secure** - 5,600Ω (contact closed)(4.5KOhm to 6.25KOhm)
- **Violated** - 11,200Ω (contact open)(13.5KOhm to open)
- **Tamper** - infinite (broken wire, open)(9KOhm to 13.5KOhm)

Normally Closed Loops - Do NOT use for UL Installations

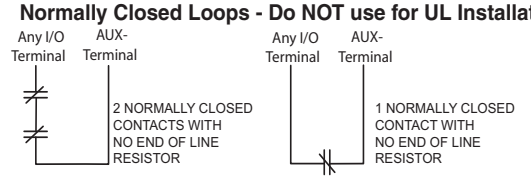

Single End-of-Line Resistor Wiring

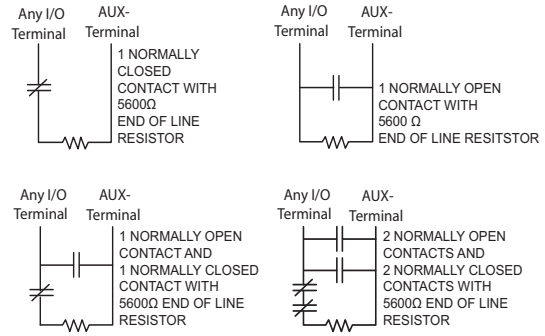

Double End-of-Line Resistor Wiring

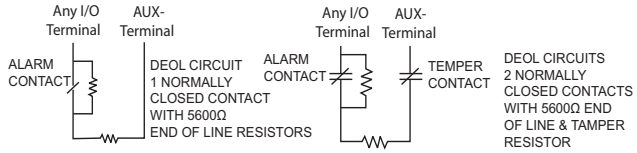

1b. Programmable Output (PGM) and Aux Wiring

I/O terminals configured as Programmable Outputs (PGMs) switch to ground when activated by the alarm system. The PGMs are open collector outputs. With a 45 mA load, the voltage measured at the PGM and Aux + shall be approximately 8V with respect to ground. With a 25 mA load, the voltage measured shall be approximately 10V.

Connect the positive side of the device to the Aux+ terminal.

Connect the negative side of the device to the I/O terminal.
Each PGM can provide 50mA maximum output.

NOTE: The alarm system can provide 200mA maximum of AUX current for PGMs, relays, LEDs etc.
The AUX output shall be used only for residential burglary applications.

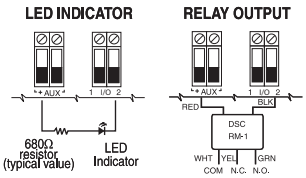

IMPORTANT: Minimum 6.4mm (1/4") separation must be maintained between RM-1 circuits and all other wiring

LED output with:

Current limiting resistor and optional relay driver output.

Compatible initiating devices intended to be used on the AUX output shall be rated for the range: 9.6VDC to 13.8VDC min.

1c. PC5950 2-Way Audio Verification Module Wiring

- Install the PC5950 in a metal cabinet secured to a wall.
- Power down the PC9155 if required.
- Route wiring to the PC9155 through the wiring guide.
- Route wiring to the audio stations as indicated (2 Max).
- Ensure telephone line wiring enables the PC9155 to seize the line.
- Test System. Refer to the PC5950 Installation Guide.

Refer to Appendix D: 2-Way Audio Verification (PC5950).

i Wiring diagram 1, Talk/Listen with Siren Shutdown, does a full talk/listen in session for silent alarms. If a listen in only session is required for silent alarms, use wiring diagram 2, Listen-in Only with Siren Shutdown.

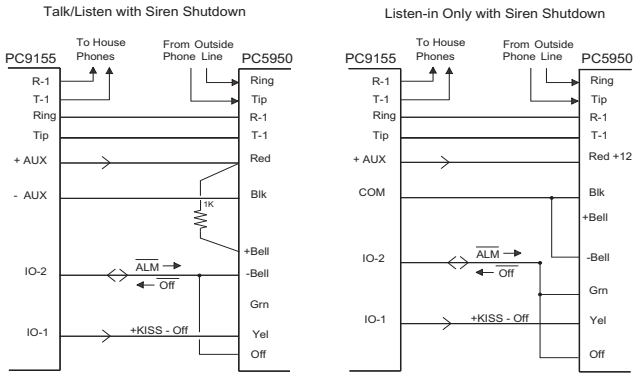

PC5950 Programming
Section 01 - Set to 1 (Hard Trip)
Section 10 - Set to 2 (Trigger Enable:Auto Trip by Bell or Green)

PC5950 Programming
Section 01 - Set to 1 (Hard Trip)
Section 07 - Set to 1 (Trigger High)
Section 10 - Set to 2 (Trigger Enable: Auto Trip by Bell or Green)

Program I/O 1 - Audio Verification PGM
Program I/O 2 - Audio Verification Monitor Zone

2. Telephone Line Wiring

Wire the incoming line (phone company) and outgoing line (premises) to the connection terminals of an RJ31x connector as indicated. This will allow line seizure if required by the alarm system. Use 24AWG minimum for wiring.

Communication formats are programmed in section [350].
Telephone call directions are programmed in sections [351]-[376].

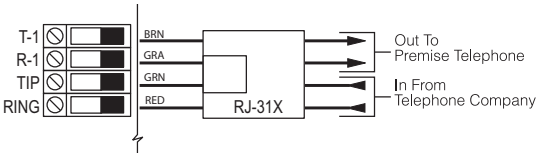

3. Battery

Sealed Lead Acid Battery

Model FP 1223 ..... 12VDC 2.3Ah@20Hr. discharge rate
Standby 24Hr

Battery Replacement

Removal:

(1) Disconnect the RED **(+)** and BLACK **(-)** connectors from the battery.
(2) Depress the plastic battery retainer on the right side of the battery with thumb to free battery from the housing, then remove battery.

Replacement:

(1) Remove terminal protection from battery.
(2) Install battery cable on battery spade lug terminals.
(3) Slide left side of battery [(+) terminal] under the left battery retaining bracket.
(4) Insert a slot screwdriver between the battery and right retaining bracket. Lever the right retaining bracket to the right while pressing the battery firmly in place.
(5) If required route battery cable through wire guides and connect to the battery connector.

- **DSC recommends battery replacement every 3-5 years.**
- **Dispose of battery in accordance with local regulations.**

4. AC Wiring

AC Transformer Requirements:

Primary: 120VAC, 60Hz., 0.200A (For UL/ULC Listed installations)
240VAC, 50Hz., 0.100A
(Fuse: 503 Si, 250V/160mA Fast-Blo)

Secondary: 16.5VAC/20VA

The following plug-in transformers shall be used:

North America (UL Listed Installations)
PTD1620U-CC

Canada (ULC Listed Installations)
PTD1620

Internal Transformer Secondary Wire Run Distance

AWG	Feet	Meters
24	5.8	1.8
22	9.3	2.8
20	14.8	4.5
18	23.5	7.2

Do NOT connect transformer to a receptacle controlled by a switch. Use a Class 2, power limited transformer for UL/ULC installations.

2.3 Wireless Device Enrollment

Installing a one-way or two-way wireless device requires programming the system with the Electronic Serial Number (ESN) so that it can be identified when an event is communicated. Two-way devices must also initiate communication with the control panel to complete the enrollment process. The control panel will then assign the device a unique system ID, device ID and encryption key. This information is sent to the device and is stored in its memory. The system uses these ID's and encryption to communicate events.

Methods of Enrollment

Two methods of enrollment are available:

- Quick Enroll – Used to enroll new devices on the system. (See below for procedure). The *Quick Enroll* procedure performs two-way enrolment communications in the background. The Two-way device and One-way device enrollment procedures are identical.
- Manual or DLS Enroll – See Installer Programming or DLS Programming (section [804]). Manual or DLS enrollment of two-way wireless keys requires the device to be physically triggered to complete the enrollment.

Enroll wireless devices in the following sequence:

- Keypad
- Sirens
- Sensors
- Pendants
- Wireless Keys

Refer to the associated installation sheet for additional details on how to activate specific wireless devices.

Enrolling Wireless Keypads

When the PC9155 is first powered up a 2 minute window is established for enrolling the first keypad. The AC Power and Ready LEDs will flash for the duration of the enrollment window. The keypad must be powered up and enrolled within this period. If the keypad is not enrolled during this window (i.e., The AC Power and Ready LEDs stop flashing) the panel must be powered down then powered up again to re-open the 2 minute enrollment window.

Step 1

Power up alarm system.
- Connect alarm system to AC Power.
- The Ready and AC LEDs flash for 2 minutes.

Step 2

Power up keypad.
- Connect keypad to AC power or install new batteries.
- After a few seconds the keypad may beep rapidly.
- 'Hold [1] and [✱] to Enroll Keypad' is displayed.
- Press the [✱] and [1] keys simultaneously to enroll the keypad.
- 'WFKP Enrollment Successful' is displayed.

```
Hold [1] and [*]
to Enroll Keypad
```

```
WFKP Enrollment
Successful
```

i

If the "Failed to Enroll" message is displayed perform the following:
- Retry the enrollment.
- Reposition the keypad closer to the control panel.
- Verify that the READY and POWER LED indicators are flashing on the panel. If not, disconnect the panel from AC and DC power sources then reconnect.
- Check for RF interference.
- Verify that the keypad is the correct model for the PC9155 System.

Enrolling Additional Keypads, Sirens & Wireless Keys

Step 1

Enter [✱][8][5555][898] [✱] [8] [5] [5] [5] [5] [8] [9] [8]

The following is displayed:

```
Wireless
Enrollment Mode
```

Step 2

- Activate the device as indicated below or in the device's Installation Sheet.
  - Additional keypad: press the [✱] and [1] keys simultaneously.
  - Siren: power up the device, press the tamper button or the test button to enroll.
  - Wireless key: Press any Key to activate. To re-enroll on another system, press and hold the ⌂ and 🔒 buttons simultaneously for 3 seconds.
- The Electronic Serial Number (ESN) is displayed on the first keypad.
- Press [✱] to confirm the ESN.
- If the ESN is incorrect press [#] then repeat this step.

```
8F0125
Confirm ESN?  *
```

Step 3

After successful confirmation of the ESN, the system prompts for the slot number.
- The next available slot is displayed. Press [✱] to accept or enter 01-04 for keypads and sirens or 01-16 for wireless keys.
- To re-enroll a wireless key press ⌂ 🔒 simultaneously for approximately 3 seconds.

```
Press (*) or
Zone #: 02
```

```
Press (*) for
Zone Type: 01
```

Enrolling Sensors & Pendants

Step 1

Enter [*][8][5555][898] [*] [8] [5] [5] [5] [5] [8] [9] [8]
"Wireless Enrollment Mode" is displayed.

```
Wireless
Enrollment Mode
```

Step 2

- Place the Wireless device near the alarm system.
- Activate the device as described in the associated installation sheet.
- The Electronic Serial Number (ESN) is displayed.
- Press [*] to confirm serial number.

```
223E02
Confirm ESN?   *
```

The ESN is a 6-digit alphanumeric number located on a removable sticker on the wireless device.

- If the serial number is incorrect, press [#] and repeat this step.

Step 3

After successful confirmation of the serial number, the system prompts for the zone #. The next available zone is displayed.

- Press [*] to accept the selection or enter a zone number (01 to 32).

For the first enrolled device enter [0] [1].

```
Enter Zone #
00
```

i

If a second device is enrolled in a zone that already has a device enrolled, the system offers the choice of overwriting the existing device.

- Press [*] to overwrite the zone.
- Press [#] to re-enter the zone number (previous display).

```
Zone 01: 224A01
Overwrite?     *
```

Step 4

After successful entry of the zone number, the system prompts for the zone type. (The recommended zone type is displayed). Press [*] to accept the zone type or:

```
Press (*) or
Zone Type: 03
```

- Enter [0] [1] for: Delay Type 1 - Entry/Exit Point e.g., door.
- Enter [0] [3] for: Instant Type - e.g., window.
- Enter [0] [5] for: Interior Stay/Away Type - e.g., motion detector.
- Enter [8] [7] for: Delayed 24 Hr. Fire Type - e.g., smoke detector.
- Enter [1] [6] for: 24 Hr. Panic - e.g., panic pendant.

Step 5

After successful entry of the zone type:
The alarm system returns to the Wireless Enrollment screen. Continue with one of the following:

```
Wireless
Enrollment Mode
```

- Activate another sensor or pendant to continue enrollment (Step 2).
- Press [#] to enter another programming section.
- Press [#] [#] to exit Installer Programming.

Enrolling Proximity Tags

If this function is available on the keypad, the **[*][5]** menu provides the option to assign a proximity tag to an access code once the access code has been entered. Swipe the tag to enroll it during user access code assignment.

i

To unenroll a proximity tag, the user code must be deleted. To retain the user code it must be reentered.

2.4 Global Wireless Device Placement Test

Wireless Device Placement

Perform the Wireless Device Placement testing on keypads, sounders and sensors only.
- This test is **NOT** required for wireless keys or pendants. Verify that pendants and Key FOBs operate within the desired operating area by arming and disarming the sytem.
- Test each device multiple times to ensure a good placement.
- If a device tests **BAD** reposition the device and retest. Slight changes in placement can cause significant differences in signal strength and range of the wireless device.

Step 1

- To enter individual Wireless Device Placement Test:

Press [*][8][X][X][X][X][9][0][4] - for wireless zones
[*][8][X][X][X][X][9][0][5] - for wireless keypads
[*][8][X][X][X][X][9][0][6] - for wireless sirens

[X][X][X][X] represents the new installer code programmed in Installer's programming to replace the 5555 default installer code.

```
Enter Section
___
```

```
Select Device <>
for Test
```

Step 2

Place the wireless device in the indended mounting location.
Activate the device as described in the associated installation sheet.
- If the alarm system receives a STRONG signal the bell will sound once and 'Location is Good' will be displayed on the LCD.
- If the alarm system receives a WEAK signal the bell will sound 3 times and 'Location is Bad' will be displayed on the LCD.
- If the alarm system indicates no response, reposition wireless device and repeat test.

```
Activate Device
Location is Good
```

```
Activate Device
Location is Bad
```

Step 3

Repeat Step 2 for each device.
When placement testing is complete, press [#][#] to exit Installer Programming.

```
System is
Ready to Arm  <>
```

i

Two-way wireless keys must be activated by pressing any key before they become functional.
To placement test a wireless keypad, press number keys 0-9.
To placement test a wireless siren, press the Test button, or tamper the device.

2.5 Individual Wireless Device Placement Test

Wireless Device Placement

Placement testing can be performed on individual wireless devices. To configure the alarm system for individual placement test, option [8] in section [804][900] must be turned off. Use the scroll keys or enter a 2 digit entry to select a specific keypad, zone or siren depending on which placement test section is entered.

Step 1

- To enter individual Wireless Device Placement Test:

Press [*][8][X][X][X][X][9][0][4] - for wireless zones
[*][8][X][X][X][X][9][0][5] - for wireless keypads
[*][8][X][X][X][X][9][0][6] - for wireless sirens

[X][X][X][X] represents the new installer code programmed in Installer's programming to replace the 5555 default installer code.

```
Enter Section
___
```

```
Select Device <>
for Test
```

Step 2

Enter a 2 digit zone number, keypad number, or siren number depending on the placement test section entered, or scroll to the desired device and press [*] to begin individual placement test.

Step 3

Place the wireless device in the intended mounting location.
Activate the device as described in the associated installation sheet.

- If the alarm system receives a STRONG signal the bell will sound once and 'Location is Good' will be displayed on the LCD.
- If the alarm system receives a WEAK signal the bell will sound 3 times and 'Location is Bad' will be displayed on the LCD.
- If the alarm system indicates no response, reposition wireless device and repeat test.

```
Activate Device
Location is Good
```

```
Activate Device
Location is Bad
```

Step 4

Repeat Step 3 for each device. Once the placement test is complete for the device, press [#] once and select the next similar device.
When placement testing is complete, press [#][#][#] to exit Installer Programming.

```
System is
Ready to Arm  <>
```

2.6 GPRS/Ethernet Module Setup/Initialization

i

Perform the following after system installation and programming:
Ensure that the following sections are programmed:

- Central Station Phone Number,(Template Programming - Entry 5) (if applicable, in sections [301]-[303] & [305])
- Account code, section [310], (Template Programming - Entry 6)
- Communications Format, Section [350]- set to [04] SIA FSK
- GPRS/Ethernet Module Enable section [382] Option[5] - set to GPRS/Ethernet Module Enabled

3 Operation

3.1 Operating Modes

3.1.1 – Away Arming

Away Arming arms the entire system including the perimeter and interior devices. The Ready light must be **ON** to arm the system. If the Ready light is **OFF**, ensure all protected doors and windows are secure or bypassed. To arm the system in the Away mode, either press and hold the Away function key for 2 seconds or enter a valid user code and leave the premises through a door programmed as Delay. Upon pressing a function key or entering an access code, the Armed light will turn **ON**. If the Audible Exit Delay option is enabled, the keypad will beep once every second during the exit delay (and three times a second during the last 10 seconds) to alert the user to leave. The Ready light will turn off when the **Exit Delay** ends.

3.1.2 – Stay Arming

> **i** ***Zones must be programmed with zone definitions (05 Interior Stay/Away, 06 Delay Stay/Away, or 32 Instant Stay/Away) for this function to work.***

Stay Arming is intended to arm the perimeter of the premises while permitting movement within the premises. The Ready light must be **ON** to arm the system. If the Ready light is **OFF** ensure all protected doors and windows are secure or bypassed. To arm the system in the Stay mode, either press and hold the Stay function key for 2 seconds or enter a valid user code and stay within the premises (do **NOT** violate a door programmed as Delay). Upon pressing a function key or entering an access code, the Armed light turns **ON**. If the Stay function button is used, the keypad will not beep during the exit delay and the user can still exit the building without the system reverting to Away mode. When a user code is used, the keypad beeps if the **Audible Exit Delay** option is enabled. The Ready light turns off when the exit delay ends.

3.1.3 – Night Arming

Night arming is intended to arm the perimeter and restrict movement to designated areas in the interior (e.g., hallways from bedrooms to bathrooms). If night zones are programmed, entering [✱][1] while the system is armed in stay mode will re-activate all interior zones except those programmed as night zones. Alternatively, while the system is disarmed the Night Arm function key can be pressed for 2 seconds to arm the panel in night mode. The Ready light must be **ON** (disarmed) or the system must be armed in the Stay mode to arm the system in this mode. In Night mode only night zones (Zone definition 37) are bypassed. When activated, there are no acknowledgement beeps, the exit delay is silent and the panel logs ***Armed in Night Mode***. If there are no night zone types programmed on the system, the system arms in Away mode and the panel logs ***Armed in Away Mode***.

3.1.4 – Disarming

The user must enter through a door programmed as Delay. Upon entering, the keypad emits a steady entry delay tone (and a pulsing tone during the last 10 seconds of entry delay) to alert the user to disarm the system. To disarm the system, enter a valid user code, present a proximity tag or use a wireless key. If an alarm occurred while the panel was armed, the keypad displays **'Alarm in Memory'** and the zone(s) that went into alarm during the armed period. Press the **[#]** key to return the keypad to the Ready state.

3.2 Language Selection

The keypad can be programmed to display messages and labels in different languages. Perform the following when in 'Ready to Arm' mode or at the Installer Programming menu:

[1] Press and hold both scroll keys [< >] simultaneously until language options are displayed.
[2] Scroll to the desired language using the scroll keys [< >].
[3] Press **[✱]** to select the desired language.

3.3 [✱] Commands

The following is a list of the [✱] commands available and a description of each:

[✱][1]	Bypass (disarmed state)/Reactivate Stay/Away Zones (armed state)
[✱][2]	Display Trouble Conditions
[✱][3]	Display Alarm Memory
[✱[4]	Door Chime Enable/Disable
[✱][5][Master/Supervisory Code]	User Code Programming
[✱][6][Master/Supervisory Code]	User Functions
[✱][7][1/2]	Command Outputs 1 and 2
[✱][8][Installer Code]	Installer Programming
[✱][9][User Code]	No-Entry Arming
[✱][0]	Quick Arm (disarmed state)/Quick Exit (armed state)

[✱][1] – Bypass/Re-activate Stay/Away and Night Zones

Press **[✱][1]** to enter Bypass mode. If the Code Required for Bypass option is enabled, enter a valid user code. The keypad displays 'Scroll to Bypass Zones'. The keypad displays the programmed zone labels and includes the letter '**O**' in the bottom, right corner if the zone is violated or the letter 'B' if the zone is bypassed. Scroll to the appropriate zone and press the **[✱]** key to change the bypass status (or enter the 2-digit zone number). Once the correct zones are bypassed, press **[#]** to exit.

Additional Bypass Commands

Bypass Recall:	In Bypass mode, press **[99]**. The keypad recalls the last group of zones that were bypassed.
Clear Bypass:	Press **[00]**. The keypad clears the bypass on all zones.
Save Bypass:	Press **[95]**. The keypad saves zones which are manually bypassed.
Recall Save:	Press **[91]**. The keypad recalls the bypassed zones that were saved.

Re-activate Stay/Away and Night Zones:

Press **[✱][1]** when the system is armed in the Stay mode to change the armed status to Away mode or Night mode. The system will add the Stay/Away zones back into the system after the exit delay time expires.

> **i** ***If any zones are programmed as night zones (zone definition 37) pressing [✱][1] when the system is in Stay mode activates Night mode instead of Away mode. Only night zones are bypassed. The stay and away zones are added back into the system.***

[✱][2] – Trouble Display

Refer to ***Chapter 6: Testing & Troubleshooting***, for troubleshooting assistance and a detailed description of all trouble conditions.

[✱][3] – Alarm Memory Display

Pressing the scroll <> keys display an "Alarms in Memory" message if an alarm occurred during the last armed period. Pressing **[✱][3]** displays the message **"Scroll to view Alarms"**. To clear the memory, arm then disarm the system.

[✱][4] – Door Chime Enable/Disable

Press **[✱][4]**. The keypad emits 3 rapid beeps to indicate that the door chime feature is enabled or a steady 2-second tone if disabled. The same function can be performed by pressing and holding the Chime function key for 2 seconds.

[✱][5] – Program User Codes

The following table identifies available user codes:

Code	Type	Function
[01] – [16]	General User Codes	Determined by attributes programmed below
[40]	Master Code	All attributes described below

Programming User Codes

Press **[✱][5]** followed by the master code. The keypad displays the first user (user 01) and includes the letter 'P' if the user code is programmed. Scroll to the appropriate user and press the **[✱]** key to program the user (or enter the 2-digit user number). Enter a new 4 or 6-digit user code or press **[✱]** to delete the user code. After the user code is programmed or deleted, scroll to another user or press **[#]** to exit.

> **i** ***Proximity tags can be assigned to a programmed user code on WT5500P keypads. After assigning a user code, the display prompts for the tag to be swipped. This assigns a proximity tag to the user code. The user code will have a T in the lower right hand corner indicating that a tag is associated with that code. To delete a proximity tag, the user code must be deleted. Refer to the Proximity Tag Installation Sheet for details. The proximity tag can be used in place of the access code for any of the instructions referred to in the Operation section of this manual.***

Programming User Attributes

Press **[✱][5]** followed by the master code or supervisor code. Press **[9]** followed by the 2-digit user number to view user attributes.
To change user attributes, press the number corresponding to the attribute or scroll to the desired attribute and press **[✱]**. When the correct attributes are assigned to the user, press **[#]** to exit. To change the attributes for another user, press **[9]** followed by the 2-digit user number. When finished, press **[#]** to exit.

> **i**
> - ***These attributes affect the operation of wireless keys.***
> - ***Wireless key numbers (01-16) correspond with user access codes (01-16).***
> - ***Duress codes are not valid when entering [*][5], [*][6] or [*][8] sections.***
> - ***Duplicate codes and codes that are +/- 1 of an existing code can not be programmed.***

[1] **Supervisor's Code:** This attribute is used for validation when entering the **[✱][5]** User Code Programming section and **[✱][6]** User Functions section. Note, the supervisor's code can only validate programming for codes with equal or lesser attributes. The supervisor's code also allows this user to create bypass groups if an access code is required to enter into **[✱][1]** Bypassing.

[2] **Duress Code:** Duress codes are standard user codes that transmit the Duress Alarm Reporting Code whenever the code is entered to perform any function on the system.

[3] **Bypass Zones:** The user can manually bypass zones if bypassing requires an access code.

[4-6] **Future Use**

[7] **Bell Squawk On Arming/Disarming:** The panel squawks the bell when the user arms using the away function key and a user code, or if the away function key is pressed on an identified wireless key.

[8] **One-time Use Code:** The one-time-use code allows unlimited arming but only permits a single disarming once a day. The Disarm function is restored at midnight.

[✱][6] – User Functions

To access the User Functions section, press **[✱][6]** followed by the master or supervisor code. Select one of the functions described below by pressing the corresponding number or scrolling to the desired option then pressing **[✱]**.

[1] **Program Time and Date:** Enter the time and date using the following format **[HH:MM] [MM/DD/YY]**. Program the time using military standard (e.g., 8:00 pm = 20:00 hours).

[2]-[3] **Future Use**

[4] **System Test:** The system activates the siren output on medium volume for 2 seconds followed by full volume alarm for 2 seconds. All display lights and LCD pixels turn on.

[5] **Enable DLS:** The panel will temporarily enable DLS double-call for 6 hours.

[6] **User Initiated DLS:** The panel attempts to call the DLS computer.

[7] **Future Use**

[8] **User Walk Test Mode:** Walk Test mode allows the operation of each detector in the system to be tested. Press [*][6][Master Code][8] to initiate Walk Test mode. While in Walk Test mode, the Ready, Armed, and Trouble LED's flash to indicate that the walk test is active. Re-entering [*][6][Master Code][8] exits Walk Test mode. The system will also automatically terminate the Walk Test on completion; it will sound an audible warning (5 beeps every 10 seconds), beginning 5 minutes before the termination of the test.

[9] **Late to Open Control:** This feature notifies a user if their alarm system is not disarmed by a programmed time of day (see Late to Open Time of Day). It is typically used to track children after school. For example, if the parents get home from work at 5pm, and a child gets home at 4pm, the programmable timer could be set for 4:15. If the system is not disarmed at this time an alert is sent to the monitoring station. The keypad displays "Late to Open is Enabled" and sounds a beep if [9] is pressed within the User Functions menu when this feature is off. The LCD keypad displays "Late to Open is Disabled" and sounds an error tone if [9] is pressed within the User Functions menu when this feature is on.

[0] **Late to Open Time of Day:** This attribute sets the time for Late to Open Control programmed for attribute [9] operation. Valid entries for these sections are 00:00 - 23:59. Entering 99:99 disables the late to open feature for that day. After the [0] key is pressed in the **[✱][6]** menu, acknowledge beeps are sounded and the message ***Press (*) for <> Sunday*** is displayed on the keypad. Pressing the [>] key scrolls through each day of the week from Sunday to Saturday. While in the Late to Open menu, entering keys 1-7 also selects each day from Sunday to Saturday.

Additional Keypad Functions

The following additional keypad functions are available:

Event Buffer:	Used to view the 500-event panel buffer
Brightness Control:	Used to adjust the display backlighting level for optimal viewing
Contrast Control:	Used to adjust the display contrast level for optimal viewing
Buzzer Control:	Used to adjust the keypad buzzer tone for optimal sound

[✱][7][1 or 2] – Command Outputs (1&2)

Press **[✱][7]** then **[1]** or **[2]**. If the Command Output Code Required option is enabled, enter a valid user code. The panel activates a command output assigned to any PGM.

[✱][8] – Installer Programming

Press **[✱][8][Installer Code]** to enter Installer Programming. Installer programming allows the installer to program all system functions. Refer to the ***section 5: Installer Programming*** for details.

[✱][9][User Code] – No-Entry Arming

Press **[✱][9]** followed by a valid user code. The system arms in the Stay mode after the exit delay expires and removes entry delay. All zones programmed as Delay function like Instant zones. The system flashes the Armed light to indicate that it is armed with no entry delay.

[✱][0] – Quick Arm/Quick Exit

Quick Arm: When disarmed, press **[✱][0]** to arm the system. Quick Arm is equivalent to entering your user code.
Quick Exit: When armed, press **[✱][0]** to activate Quick Exit. Quick Exit allows you to exit the premises without disarming the system.The system allows a single zone programmed as Delay to be violated and restored once during the following 2 minute time period without changing the status of the system.

3.4 Function Keys

The keypad has 5 programmable one-touch function keys located in a column down the right-side of the keypad. These keys can also be activated by pressing and holding number **[1]** through **[5]** respectively for 2 seconds. The default for these keys are as follows:

[1] Stay Arm
[2] Away Arm
[3] Chime Enable/Disable
[4] Bypass
[5] Quick Exit

4 Programming

The PC9155 can be programmed using three methods:

- Template Programming - Allows the minimum required data to be programmed. It also allows for the setup of DLS downloading software.
- DLS Programming - Allows programming to be downloaded using DLS-IV®™ software.
  - DLS programming can be performed locally with a PC-Link cable and a PC with DLS-IV software installed.
  - DLS programming can be performed remotely via telephone line, GPRS network or the Internet.
  - Setup for DLS can be accessed from Template Programming or Installer Programming modes.
- Installer Programming - Allows direct access to all programming sections. Template programming is accessed from here.

Ensure that the system is disarmed before proceeding.

To Enter Installer Programming:

Enter [✱][8][Installer Code] E.g., [✱][8][5][5][5][5] **You are now in Installer Programming.** See *Installer Programming* in section 4.3 for details	The following screen is displayed: Enter Section ---

To Enter Template Programming:

Enter [899] on the "Enter Section" screen to enter ***Template Programming.*** See *Template Programming* in section 4.1 for details.	The following screen is displayed: Enter Section --- > Enter Data 0111

To Enroll Wireless Devices:

Enter [898] on the "Enter Section" screen to enroll ***Wireless Devices***. See *Wireless Device Enrollment* in section 2.3 for details.	The following screen is displayed: Enter Section --- > Wireless Enrollment Mode

DLS Programming:

DLS Programming can be set up from Template programming (See Steps 3, 4 and 5 or from Installer Programming. See programming sections [401]-[499].

4.1 Template Programming

Template programming allows the installer to quickly program the minimum functions required for basic operation. The installer is prompted to enter a 4-digit code that selects predefined zone definitions, reporting code formats, troubles & restorals, and DLS setup (seethe tables for digits 1 - 4 below). The installer is then prompted to enter the central station telephone number & account code, DLS access code, entry & exit delays and a new installer code.

Perform the following after completing the hardware installation. Ensure you have the information listed below available for programming. Record this information in section 5.2 *Programming Worksheets* for future reference:

- Monitoring Station Telephone Number - Provided by your alarm monitoring service.
- Monitoring Station Account Code - Provided by your alarm monitoring service.
- Downloading Access Code.
- Entry Delay - Installer defined.
- Exit Delay - Installer defined.
- Installer Code - User defined unique 4-digit code, default value is [5555].

Step 1	If "Ready to Arm" is displayed, Enter [✱][8][5][5][5][5][8][9][9]	System is Ready to Arm <> Enter Section ---

Step 2

Once in the programming section, the 4-digit number “0111” is displayed. Enter [0][0][0][1] to accept the existing default programming.
See the tables below for details of Digit 1, 2, 3 and 4.

```
Enter Data
0111
```

Step 3

After entering ‘0001’, the first telephone entry is displayed. Enter the monitoring station telephone number after the “D”. Do NOT delete any of the remaining “Fs”
E.g., To enter 02-1234-5678:
Press [0][2][1][2][3][4][5][6][7][8] followed by [#] to complete the entry. See section [301] for additional details.

```
DFFFFFFFFFFFFFFF
FFFFFFFFFFFFFFFF
```

```
D0212345678FFFFF
FFFFFFFFFFFFFFFF
```

Step 4

After programming the first telephone number, the system account code is displayed.
The system account code can be any 6-digit combination of numbers (0-9) and letters (A-F). If the system account code is 4-digits, the last two digits must be ‘FF’.
To enter the letters A through F, press [*] then the numbers 1 through 6 for the letter A through F respectively. Press [*] again to revert back to decimal entry.
E.g.,: To enter “1234FF” Press [1][2][3][4][*][6][6].
See section [310] for additional details.

```
Enter Hex Data
FFFFFF
```

```
Enter Hex Data
1234FF
```

Step 5

After programming the system account code, the downloading access code is displayed.
Enter the new downloading access code or press [#] to proceed to the next step. See section [403] for additional details.

```
Enter Hex Data
915500
```

Step 6

The entry delay is the amount of time given to disarm the alarm system, after entering the premises through a delay type zone, before an alarm is sounded.
• Press [>][>][>] to accept the default time of 30 seconds (030) or enter an entry delay between 001 and 255.
E.g., Press 020 for a delay of 20 seconds. See section [005] for additional details.

```
Enter Data
030
```

Step 7

The exit delay is the amount of time given to exit the premises after pressing the Arm key before the alarm system is armed.
• Press [>][>][>] to accept the default time of 120 seconds (120) or enter an entry delay between 001 and 255.
E.g., Press 030 for a delay of 30 seconds. See section [005] for additional details.

```
Enter Data
120
```

Step 8

After programming the exit delay, the installer code is displayed. Enter a 4 or 6-digit code depending on the value in section [701] option 5.
Press [#] to exit Template Programming. See section [006] for installer code details.

```
Enter Data
5555
```

- **Digit 1** selects one of the following zone definition options for the first 8 zones. A ‘0’ in the digit 1 location indicates that the default settings for the first 8 zones are in place unless overridden during enrollment. See section [001] for defaults.

Option	Zn1	Zn2	Zn3	Zn4	Zn5	Zn6	Zn7	Zn8
0	This entry will not change the currently programmed zone definitions.							
1	01	03	03	03	04	04	04	04
2	01	03	03	05	05	05	05	88
3	01	03	03	05	05	05	05	87
4	01	01	03	03	03	03	03	03
5	01	03	03	06	05	05	05	05
6	01	03	03	06	05	05	05	88
7	01	01	06	06	06	01	01	01
Refer to Chapter 5 for zone definition details								

Zone Definitions (Options 1- 7)
01 Delay 1
02 Delay 2
03 Instant
04 Interior
05 Interior Stay/Away
06 Delayed Stay/Away
87 Delayed 24 Hr.
88 Standard 24 Hr. Fire

- **Digit 2** selects one of the following reporting code options:

Opt#	Phone Line 1	Programming Section	Phone Line 3	Programming Section
0	This entry will not change the existing communications programming.			
1	Disabled	[380] Opt 1 OFF	Disabled	
2	SIA Automatic Reporting Codes Enabled	[350] 1st Phone # [04] [380] Opt 1 ON [381] Opt 3 OFF	SIA Automatic Reporting Codes Enabled	[350] 3rd Phone # [04]
3	Contact ID Automatic Reporting Codes Enabled	[350] 1st Phone # [03] [380] Opt 1 ON [381] Opt 7 OFF	SIA Automatic Reporting Codes Enabled	[350] 3rd Phone # [04] [381] Opt [03] OFF
4	SIA Automatic Reporting Codes Enabled	[350] 1st Phone #[04] [380] Opt 1 ON [381] Opt 3 OFF	Residential Dial Enabled	[350] 3rd Phone # [06]
5	Contact ID Automatic Reporting Codes Enabled	[350] 1st Phone # [03] [380] Opt 1 ON [381] Opt 7 OFF	Residential Dial Enabled	[350] 3rd Phone # [06]
6	Contact ID Automatic Reporting Codes Enabled	[350] 1st Phone # [03] [380] Opt 1 ON [381] Opt 7 OFF	Contact ID Reporting Codes Enabled	[350] 3rd Phone # [03]

- **Digit 3** selects one of the following options:

Option	Common Group	Selected Troubles	Openings/ Closings	Zone Restorals	DLS/Installer Lead In/Out
0	This entry will not change the existing call direction programming.				
1	✔			✖	✖
2	✔	✔		✖	✖
3	✔		✔	✖	✖
4	✔	✔	✔	✖	✖
5	✔	✔			✖
6	✔		✔		✖
7	✔	✔	✔		✖
8	✔				
✔ indicates included, Blank indicates default setting, ✖ indicates disabled					

Digit 3 - Table Headings/Descriptions

Common Group - Sets all Reporting Codes to Automatic			
Description	**Phone #1**	**Phone #3**	**Sections**
Set all Reporting Codes to automatic			[320] - [348] FF
Alarm/Restore call directions enabled	✔		[351][1] ON, [351][2-4] No Change
Tamper/Restore Call directions disabled	✖	✖	[359][1] OFF, [1-4] OFF
Opening/Closing Call directions disabled	✖	✖	[367][1] OFF, [1-4] OFF
Maintenance Call Directions enabled	✔		[375][1] ON, [351][2-4] No Change

Selected Troubles		
Trouble	**[345] Alarms**	**[346] Restoral**
Battery	FF	FF
AC Failure	00	00
Fire Trouble	FF	FF
Aux PS	FF	FF
TLM	XX	00
General System Trouble	00	00

Openings & Closings - Sets Residential Dial Reporting Codes for all openings and closings									
Users	**CLOSINGS, Residential Dial Reporting Codes**								**Section**
1-8	51	52	53	54	55	56	57	58	[339]
9-16	61	62	63	64	65	66	67	68	[339]
40	99	FF	FF	FF	FF	XX	XX	XX	[341]
Users	**OPENINGS, Residential Dial Reporting Codes**								**Section**
1-8	11	12	13	14	15	16	17	18	[342]
9-16	21	22	23	24	25	26	27	28	[342]
40	98	FF	XX	XX	XX	XX	XX	XX	[344]
Enable Opening/Closings call directions for Phone 2 FF=disabled, XX=Not Used									[367]Opt 2 ON

DLS/Installer Lead-in/out
DLS Lead-in
Sect [347] Opt 4
DLS Lead-out
Sect [347] Opt 5
Installer Lead-in
Sect [347] Opt 11
Installer Lead-out
Sect [347] Opt 11
Enabled for Options 8 only

Digit 4 indicates/selects one of the following DLS connections:

Option	Double Call Sect [401] Opt 1	Call Back Sect [401] Opt 3	User Call Up Sect [401] Opt 4	#Rings Sect [406]
1	✖	✖	✖	000
2	✔	✖	✖	008
3	✔	✔	✖	008
4	✔	✖	✔	008

4.2 DLS Programming

4.2.1 Local Programming with PC-Link

Follow the steps below in the sequence indicated.

Step 1

Ensure front cover is removed and the system is powered up.

i

PC-Link connections are 'hot-swappable'. GPRS/Ethernet module connections are not 'hot-swappable' and the PC9155 should be powered down before connecting or disconnecting this module.

Step 2

For systems with a GS2065 or TL265GS module installed, disconnect the PC-link connector from the PC9155 module side first.

Step 3

Connect the PC-Link cable between the computer (with DLS Software installed and running) and the header pins on the alarm system.
Connecting the DLS PC to the alarm system automatically initiates a DLS session.
If the DLS session is not automatically initiated, enter **[✱][8][Installer Code][499][Installer Code][499]** to manually initiate PC-Link (Refer to the DLS software help file for programming details).
Upon completion of the session, remove the PC-link cable from the alarm system, power down, and reconnect the cable for the GPRS/Ethernet module (if installed).

4.2.2 Remote Programming via Telephone Line

Refer to section [401] DLS Downloading for setup details.

i

After downloading a 2-way wireless key serial number to the PC9155, a button must be pressed on the wireless key before it will become operational.

4.3 Installer Programming

Enter [✱][8][Installer Code].
The system prompts for a 3-digit programming section number (refer to Chapter 5 for programming details).

5 Installer Programming

5.1 Index to Programming Options

Sect	Description	Pages
[001]-[002]	Zone Definitions	5-2/5-24
[005]	System Timers	5-2/5-26
[006]	Installer's Code	5-3/5-26
[007]	Master Code	5-3/5-26
[008]	Maintenance Code	5-3/5-26
[009]	I/O Programming	5-3/5-26
[012]	Keypad Lockout Options	5-3/5-28
[013]	First System Options	5-3/5-28
[014]	Second System Options	5-3/5-28
[015]	Third System Options	5-4/5-28
[016]	Fourth System Options	5-4/5-29
[018]	Sixth System Options	5-4/5-30
[023]	Tenth System Options	5-4/5-30
[024]	Eleventh System Options	5-4/5-30
[030]	Zone Loop Response Options	5-4/5-31
[101]-[134]	Zone Attributes	5-5/5-31
[167]	GPRS/Ethernet Interface Communications Wait for ACK	5-6/5-32
[168]	Set Clock Forward (Daylight Saving)	5-6/5-32
[169]	Set Clock Back (Standard Time)	5-6/5-32
[170]	PGM Output Timer	5-6/5-32
[176]	Cross Zone/Police Code Timer	5-6/5-32
[190]	No Activity Arming Pre-Alert Timer	5-6/5-32
[191]	No Activity Arming Timer	5-6/5-32
[202]-[206]	Zone Assignments	5-6/5-32
[301]	First Telephone Number	5-6/5-33
[302]	Second Telephone Number	5-6/5-33
[303]	Third Telephone Number	5-6/5-33
[304]	Call Waiting Cancel String	5-6/5-33
[305]	Fourth Telephone Number	5-6/5-33
[310]	System Account Code	5-6/5-33
[320]-[322]	Alarm Reporting Codes (01-34)	5-7/5-33
[324]-[326]	Alarm Restoral Reporting Codes (01-34)	5-7/5-33
[328]	Miscellaneous Alarm Reporting Codes	5-7/5-34
[329]	Priority Alarm and Restore Reporting Codes	5-7/5-34
[330]-[332]	Tamper Reporting Codes	5-8/5-34
[334]-[336]	Tamper Restoral Reporting Codes	5-8/5-34
[338]	Miscellaneous Tamper Reporting Codes	5-8/5-34
[339]	Closing (Arming) Reporting Codes (01-16)	5-8/5-34
[341]	Miscellaneous Closing (Arming) Reporting Codes	5-8/5-34
[342]	Opening (Disarming) Reporting Codes (01-16)	5-9/5-35
[344]	Miscellaneous Opening (Disarming) Reporting Codes	5-9/5-35
[345]	Maintenance Alarm Reporting Codes	5-9/5-35
[346]	Maintenance Restore Reporting Codes	5-9/5-35
[347]	Miscellaneous Maintenance Reporting Codes	5-9/5-35
[348]	Test Transmission Reporting Codes	5-10/5-36
[350]	Communicator Format Options	5-10/5-36
[351]-[376]	Call Direction Options	5-10/5-36
[377]	Communication Variables	5-10/5-36
[378]	Test Transmission Time of Day	5-11/5-37
[380]	First Communicator Options	5-11/5-37
[381]	Second Communicator Options	5-11/5-38
[382]	Third Communicator Options	5-11/5-38
[383]	Fourth Communicator Options	5-11/5-39
[389]	GPRS/Ethernet Fault Check Timer	5-11/5-39
[401]	First Downloading Options	5-11/5-39
[402]	Downloading Computer's Telephone Number	5-12/5-40
[403]	Downloading Access Code	5-12/5-40
[404]	Panel Identification Code	5-12/5-40
[405]	Double Call Timer	5-12/5-40
[406]	Number of Rings to Answer On	5-12/5-40
[499]	Initiate PC-Link Downloading	5-12/5-40
[501]-[502]	PGM Attributes	5-12/5-40
[591]-[592]	Inactivity Timers 1&2 Start and End Times	5-13/5-41
[600]	2-Way Audio Control Options	5-13/5-41
[610]	Alternate Communicator Receiver Trouble Reporting Codes	5-14/5-42
[700]	Automatic Clock Adjust	5-13/5-42
[701]	First International Options	5-14/5-42
[702]	Second International Options	5-14/5-42
[703]	Delay Between Dialing Attempts	5-14/5-42
[800]	Door Chime Options (Zones 01-34)	5-14/5-43
[804]	**Wireless Programming**	**5-15/5-43**
[804][001]-[032]	Wireless Device Serial Numbers	5-14/5-43
[804][081]	Wireless Supervisory Windows	5-15/5-43
[804][082]-[085]	Zone Transmitter Supervision Options	5-15/5-43
[804][101]-[182]	Wireless Key Programming	5-15/5-44
[804][201]-[204]	Wireless Keypad Serial Numbers	5-16/5-44
[804][301]-[304]	Wireless Siren Serial Numbers	5-16/5-44
[804][311]-[314]	Wireless Siren Options	5-16/5-44
[804][320]	Global Siren Options	5-17/5-45
[804][330]	Maximum Outdoor Siren Activation Time	5-17/5-45
[804][900]	General Wireless Options	5-17/5-45
[851]	**GPRS/Ethernet Module Programming**	**5-17/5-45**
[898]	Wireless Device Enrollment	5-19/5-45
[899]	Template Programming	5-19/5-45
[900]	Panel Version	5-20/5-45
[904]	Wireless Zone Module Placement Test	5-20/5-45
[905]	Wireless Keypad Placement Test	5-20/5-45
[906]	Wireless Siren Placement Test	5-20/5-45
[990]	Installer Lockout Enable	5-20/5-46
[991]	Installer Lockout Disable	5-20/5-46
[996]	Restore PC9155 Wireless Device Factory Defaults	5-20/5-46
[998]	Restore PC9155 (Panel Only) Factory Defaults	5-20/5-46
[999]	Restore PC9155 System Factory Defaults	5-20/5-46
[*]	**Keypad Programming**	**5-20/5-46**
[000]	Keypad Function Key Programming	5-20/5-46
[001]-[034]	Label Programming	5-21/5-47
[065]	Fire Alarm Label	5-22/5-47
[066]	Fail to Arm Message	5-22/5-47
[067]	Alarm When Armed Event Message	5-22/5-47
[068]	Command Output #1 Label	5-22/5-47
[069]	Command Output #2 Label	5-22/5-47
[074]	First Keypad Options	5-22/5-47
[075]	Second Keypad Options	5-22/5-48
[076]	Third Keypad Options	5-22/5-48
[077]	LCD Message	5-22/5-48
[078]	Downloaded Message Duration	5-23/5-48
[996]	Reset Label to Factory Defaults	5-23/5-49
[997]	Keypad Version	5-23/5-49
[998]	Initiate Global Label Broadcast	5-23/5-49
[999]	Restore Factory Default Programming	5-23/5-49

5.2 Programming Worksheets

i Def *Indicates default settings that are common to all alarm system versions covered*

NA *Indicates default settings for North American panels*

CP *Indicates default settings for CP-01 compliance*

EU *Indicates default settings for European panels*

All Defaults are OFF unless indicated otherwise

[001]-[002] Zone Definitions

00 Null Zone
01 Delay 1
02 Delay 2
03 Instant
04 Interior
05 Interior Stay/Away
06 Delay Stay/Away
07 Future Use
08 Future Use
09 24-Hour Supervisory (Hardwired)
10 24-Hour Supervisory Buzzer
11 24-Hour Burglary
12 Future Use
13 24-Hour Gas
14 Future Use
15 24-Hour Medical
* 16 24-Hour Panic
* 17 24-Hour Emergency
18 Future Use
* 19 24-Hour Water
* 20 24-Hour Freeze
21 Future Use
* 22 Momentary Keyswitch Arm
* 23 Maintained Keyswitch Arm
24 Future Use
* 25 Interior Delay
* 26 24-Hour Non-Alarm (local alarm)
27 Future Use
28 Future Use
29 Future Use
30 Future Use
31 Day Zone
* 32 Instant Stay/Away
33 Future Use
34 Future Use
35 Future Use
36 24-Hr Non-Latching Tamper
37 Night Zone
** 81 24-Hr Carbon Monoxide (Wireless)
82 Audio Verification Monitor
** 87 Delay 24-Hr Fire (Wireless)
** 88 Standard 24-Hr Fire (Wireless)
** 89 Auto Verified Fire (Wireless)

* For burglary applications only ** For residential fire applications only

Sect	Zone	NA	CP	EU		Zone	NA	CP	EU		Sect	Zone	NA	CP	EU		Zone	NA	CP	EU	
[001]	1	01	01	01	___	9	00	00	00	___	[002]	17	00	00	00	___	25	00	00	00	___
	2	03	03	03	___	10	00	00	00	___		18	00	00	00	___	26	00	00	00	___
	3	03	03	03	___	11	00	00	00	___		19	00	00	00	___	27	00	00	00	___
	4	03	03	03	___	12	00	00	00	___		20	00	00	00	___	28	00	00	00	___
	5	04	04	04	___	13	00	00	00	___		21	00	00	00	___	29	00	00	00	___
	6	04	04	04	___	14	00	00	00	___		22	00	00	00	___	30	00	00	00	___
	7	04	04	04	___	15	00	00	00	___		23	00	00	00	___	31	00	00	00	___
	8	04	04	04	___	16	00	00	00	___		24	00	00	00	___	32	00	00	00	___

[005] System Timers

Valid entries for Entry Delay are between 030-255.

Sub Sections [02]-[08] are reserved for future use

Sub Sect.		NA	CP	EU	
[01]	Entry Delay 1	030	030	030	___
	Entry Delay 2	045	030	045	___
	Exit Delay	120	060	120	___
[09]	Bell Time Out (BTO)	004	004	004	___

i *For SIA CP-01 compliant installations, the Exit Delay must be within the range of 045-255 seconds*

i *If the Exit Delay is silent (section 14, option 6 or Stay Function Key Arming) the exit delay will be twice the programmed value but will not exceed 255 seconds (i.e., 090-255 seconds).*

i *For UL installations, the Entry Delay plus the Communications Delay must not exceed 60 seconds.*

[006] Installer's Code

[007] Master Code

[008] Maintenance Code

These codes are 4 or 6-digits (programmed in section[701] Opt [5]).
For 4-digit codes the default is the first 4 digits

Def 555555 _____ Def 123456 _____ Def AAAA00 _____

Programmable Output Options

00	Null PGM (Not Used)	12	TLM and Alarm
01	Fire and Burglary Output	13-16	For Future Use
02	For Future Use	17	Away Armed Status
03	For Future Use	18	Stay Armed Status
04	For Future Use	19	Command Output #1 ([*][7][1])
05	System Armed Status	20	Command Output #2 ([*][7][2])
06	Ready To Arm	21-32	For Future Use
07	Keypad Buzzer Follower	33	For Future Use
08	Courtesy Pulse	34	For Future Use
09	System Trouble Output (with Trouble Options)	35	For Future Use
10	System Event Output (with Event Options)	40	Audio Verification trigger
11	System Tamper (all sources: zones, keypad)		

[009] I/O Programming

Def	00	I/O Type (Zone 33, PGM 1)	Enter Zone or PGM Definition
Def	00	I/O Type (Zone 34, PGM 2)	Enter Zone or PGM Definition

[012] Keypad Lockout Options

If Keypad Lockout is active, the system can not be disarmed with a keyswitch.

Def	000	Number of Invalid Codes Before Lockout	(Valid entries are 000-255)
Def	000	Lockout Duration (in minutes)	(Valid entries are 000-255)

[013] First System Options

Opt	NA	CP	EU	ON	OFF
1	✓	✓	✓	☐ Hardwired Zone 33 Input Enabled	☐ Pgm 1 Output Enabled
2	✓	✓	✓	☐ Hardwired Zone 34 Input Enabled	☐ Pgm 2 Output Enabled
3				For Future Use	
4				For Future Use	
5				For Future Use	
6				☐ Audible Exit Fault Enabled	☐ Audible Exit Fault Disabled
7	✓	✓	✓	☐ Event Buffer Follows Swinger Shutdown	☐ Event Buffer Logs Events Past Shutdown
8				☐ Temporal Three Fire Signal Enabled	☐ Standard Pulsed Fire Signal

[014] Second System Options

Opt	NA	CP	EU	ON	OFF
1				☐ Arm / Disarm Squawk Enabled	☐ Arm / Disarm Squawk Disabled
2				For Future Use	
3				☐ RF Jam Log After 5 Minutes	☐ RF Jam Log After 20 sec
4				For Future Use	
5				For Future Use	
6	✓	✓	✓	☐ Audible Exit with Urgency	☐ Silent Exit Delay
7				For Future Use	
8				☐ Fire Siren is Continuous	☐ Fire Siren Follows Siren Cut-Off

[015] Third System Options

Opt	NA	CP	EU	ON	OFF
1	✓	✓	✓	☐ [F] Key Enabled	☐ [F] Key Disabled
2				☐ [P] Key Audible (Siren / Beeps)	☐ [P] Key Silent
3	✓	✓	✓	☐ Quick Exit Enabled	☐ Quick Exit Disabled
4	✓	✓	✓	☐ Quick Arming Enabled (*0 And Function Keys)	☐ Quick Arming Disabled (Funct. Keys Req. Code)
5				☐ Code Required For Bypassing	☐ No Code Required
6				☐ Master Code Not Changeable	☐ Master Code Changeable
7	✓	✓	✓	☐ TLM Enabled	☐ TLM Disabled
8				☐ System Tamper Enabled	☐ System Tamper Disable

[016] Fourth System Options

Opt	NA	CP	EU	ON	OFF
1				☐ Cross Zoning is Enabled	☐ Police Code is Enabled
2		✓		☐ Exit Delay Restart Enabled	☐ Exit Delay Restart Disabled
3				☐ Blank Keypad When Not Used	☐ Keypad Active Always
4				☐ Code Required To Remove Keypad Blanking	☐ No Code Required
5	✓	✓	✓	☐ Keypad Backlighting is Enabled	☐ Keypad Backlighting is Disabled
6	✓	✓	✓	☐ ID WKEY Not Required For Disarming	☐ ID WKEY Required For Disarming
7				☐ Bypass Status Displayed While Armed	☐ Bypass Status Not Displayed While Armed
8				☐ Daylight Savings Time Enabled	☐ Daylight Savings Time Disabled

[018] Sixth System Options

Opt	NA	CP	EU	ON	OFF
1				For Future Use	
2				☐ Keypad Tampers Enabled	☐ Keypad Tampers Disabled
3				For Future Use	
4				For Future Use	
5				☐ Keypad Buzzer Follows Siren Enabled	☐ Keypad Buzzer Follows Siren Disabled
6				For Future Use	
7				For Future Use	
8				For Future Use	

[023] Tenth System Options

Opt	NA	CP	EU	ON	OFF
1				For Future Use	
2				For Future Use	
3				☐ Test Transmission While Armed Only	☐ Test Transmission While Armed/Disarmed
4				☐ Test Transmission Counter In Hours	☐ Test Transmission Counter In Days
5				☐ Switching From Away To Stay Disabled	☐ Away To Stay Toggle Option Permitted
* 6				For Future Use	
7				☐ Trouble Beeps Are Silent	☐ Trouble Beeps Will Sound Every 10 Seconds
8				☐ Keyswitch Arms In Away Mode Only	☐ Keyswitch Arms In Stay Or Away

[024] Eleventh System Options

Opt	NA	CP	EU	ON	OFF
1	✓	✓	✓	☐ Temperature Display Enabled	☐ Temperature Display Disabled
2	✓		✓	☐ Temperature Displayed in Celsius	☐ Temperature Displayed In Fahrenheit
3	✓	✓	✓	☐ PC9155 Internal Siren Enabled	☐ PC9155 Internal Siren Disabled
4	✓	✓	✓	☐ Inactivity monitored by all zones	☐ Inactivity monitored only by 24 Hr Non-alarm zones
5				For Future Use	
* 6				For Future Use	
7				For Future Use	
8				For Future Use	

[030] Zone Loop Response Options

Opt	NA	CP	EU	ON	OFF
1				☐ Zone 33 is Fast Loop Response	☐ Zone 33 is Normal Loop Response
2				☐ Zone 34 is Fast Loop Response	☐ Zone 34 is Normal Loop Response

[101]-[134] Zone Attributes (Attributes 10-13 are reserved for Future Use)

Attribute:	1	2	3	4	5	6	7	8	9	14	15	16
✓= ON	Audible	Steady	Chime	Bypass	Force	Swing	TX Dly	X-Zone	2-way	NC	SEOL	DEOL
Zone Type OFF	Silent	Pulsed	No	No	No	No	No	No	Audio	Loops		
00 Null Zone												
01 Delay 1	✓	✓	✓	✓		✓			✓		✓	
02 Delay 2	✓	✓	✓	✓		✓			✓		✓	
03 Instant	✓	✓	✓	✓		✓			✓		✓	
04 Interior	✓	✓		✓		✓			✓		✓	
05 Interior Stay/Away	✓	✓		✓	✓	✓			✓		✓	
06 Delay Stay/Away	✓	✓		✓	✓	✓			✓		✓	
07 Future Use												
08 Future Use												
09 24-Hour Supervisory (Hardwired)		✓			✓						✓	
10 24-Hour Supervisory Buzzer		✓		✓					✓		✓	
11 24-Hour Burglary	✓	✓		✓					✓		✓	
12 Future Use												
13 24-Hour Gas	✓								✓		✓	
14 Future Use	✓										✓	
15 24-Hour Medical	✓	✓							✓		✓	
16 24-Hour Panic	✓	✓							✓		✓	
17 24-Hour Emergency	✓	✓							✓		✓	
18 Future Use												
19 24-Hour Water	✓	✓							✓		✓	
20 24-Hour Freeze	✓	✓							✓		✓	
21 Future Use												
22 Momentary Keyswitch Arm					✓						✓	
23 Maintained Keyswitch Arm					✓						✓	
24 Future Use												
25 Interior Delay	✓	✓		✓		✓			✓		✓	
26 24-Hour Non-Alarm (local alarm)					✓						✓	
27 Future Use												
28 Future Use												
29 Future Use												
30 Future Use												
31 Day Zone	✓	✓		✓	✓	✓			✓		✓	
32 Instant Stay/Away	✓	✓		✓		✓			✓		✓	
33 Future Use												
34 Future Use												
35 Future Use												
36 24-Hr Non-Latching Tamper		✓				✓					✓	
37 Night Zone	✓	✓		✓	✓	✓			✓		✓	
81 24-Hr Carbon Monoxide (Wireless)	✓											
82 Audio Verification Monitor												
87 Delay 24-Hr Fire (Wireless)	✓											
88 Standard 24-Hr Fire (Wireless)	✓											
89 Auto Verified Fire (Wireless)	✓											

ℹ ** For UL installations: do not change attribute 5 (Force Arming) from the default setting.*

ℹ *For CP-01 installations:*

Option 6 (Swinger) is defaulted ON for zone definitions 09-11, 13-17, 19, 20

Option 7 (TX Delay) is defaulted ON for zone definitions 01-06, 09-11, 13-17, 19, 20, 25, 32, 36,

[167] GPRS/Ethernet Interface Communications Wait For Ack

NA 020 CP 020 EU 020 ____ Valid Entries 001-255 seconds

[168] Set Clock Forward (Daylight Saving)

	NA CP EU		
Month	003 003 003	____	Valid Entries 001-012
Week	002 002 005	____	Valid Entries 001-005
Day	000 000 000	____	Valid Entries 000-031
Hour	002 002 001	____	Valid Entries 000-023
Increment	001 001 001	____	Valid Entries 001-002

[169] Set Clock Back (Standard Time)

	NA CP EU		
Month	011 011 010	____	Valid Entries 001-012
Week	001 001 005	____	Valid Entries 001-005
Day	000 000 000	____	Valid Entries 000-031
Hour	002 002 001	____	Valid Entries 000-023
Decrement	001 001 001	____	Valid Entries 001-002

[170] PGM Output Timer

NA 005 CP 005 EU 005 ____ Valid Entries 001-255 seconds

[176] Cross Zone/Police Code Timer

NA 060 CP 060 EU 060 ____ Valid Entries 001-255 seconds/minutes

[190] No Activity Arming Pre-Alert Timer

NA 001 CP 001 EU 001 ____ Valid Entries 001-255 minutes, 000 for no pre-alert

[191] No Activity Arming Timer

NA 000 CP 000 EU 000 ____ Valid Entries 001-255 minutes, 000 to disable

[202]-[206] Zone Assignments

Opt.	[202] Zone 1-8 NA	CP	EU		[203] Zone 9-16 NA CP EU		[204] Zone 17-24 NA CP EU		[205] Zone 25-32 NA CP EU		[206] Zone 33-34 NA CP EU	
1	✓	✓	✓	☐ Zone 1	☐	Zone 9	☐	Zone 17	☐	Zone 25	☐	Zone 33
2	✓	✓	✓	☐ Zone 2	☐	Zone 10	☐	Zone 18	☐	Zone 26	☐	Zone 34
3	✓	✓	✓	☐ Zone 3	☐	Zone 11	☐	Zone 19	☐	Zone 27	☐	Future Use
4	✓	✓	✓	☐ Zone 4	☐	Zone 12	☐	Zone 20	☐	Zone 28	☐	Future Use
5	✓	✓	✓	☐ Zone 5	☐	Zone 13	☐	Zone 21	☐	Zone 29	☐	Future Use
6	✓	✓	✓	☐ Zone 6	☐	Zone 14	☐	Zone 22	☐	Zone 30	☐	Future Use
7	✓	✓	✓	☐ Zone 7	☐	Zone 15	☐	Zone 23	☐	Zone 31	☐	Future Use
8	✓	✓	✓	☐ Zone 8	☐	Zone 16	☐	Zone 24	☐	Zone 32	☐	Future Use

[301] First Telephone Number (32 Digits)

D ____

[302] Second Telephone Number (32 Digits)

D ____

[303] Third Telephone Number (32 Digits)

D ____

[304] Call Waiting Cancel String

Def DB70EF ____

i *All six digits must be entered for changes to be saved. Program unused digits with 'F'.*

[305] Fourth Telephone Number (32 Digits)

D ____

[310] System Account Code

Enter a 6-digit account number for the system account code. Only SIA supports 6-digit account codes. If a 4-digit code is used, program the last two digits of the account code with FF.

Def FFFFFF ____

Reporting Codes

All Reporting Codes are defaulted 'FF' unless indicated otherwise.

[320]-[322] Alarm Reporting Codes, Zones 01-34

[320]	Zone 1	Zone 2	Zone 3	Zone 4	Zone 5	Zone 6	Zone 7	Zone 8
	Zone 9	Zone 10	Zone 11	Zone 12	Zone13	Zone 14	Zone 15	Zone 16
[321]	Zone 17	Zone 18	Zone 19	Zone 20	Zone 21	Zone 22	Zone 23	Zone 24
	Zone 25	Zone 26	Zone 27	Zone 28	Zone 29	Zone 30	Zone 31	Zone 32
[322]	Zone 33	Zone 34						

[324]-[326] Alarm Restoral Reporting Codes, Zones 01-34

[324]	Zone 1	Zone 2	Zone 3	Zone 4	Zone 5	Zone 6	Zone 7	Zone 8
	Zone 9	Zone 10	Zone 11	Zone 12	Zone13	Zone 14	Zone 15	Zone 16
[325]	Zone 17	Zone 18	Zone 19	Zone 20	Zone 21	Zone 22	Zone 23	Zone 24
	Zone 25	Zone 26	Zone 27	Zone 28	Zone 29	Zone 30	Zone 31	Zone 32
[326]	Zone 33	Zone 34						

[328] Miscellaneous Alarm Reporting Codes

Duress Alarm
Opening After Alarm
Recent Closing
For Future Use
For Future Use
Cross Zone / Police Code Alarm
Burglary Not Verified
Alarm Cancelled

[329] Priority Alarm And Restore Reporting Codes

Keypad [F]ire Alarm
Keypad [A]uxiliary Alarm
Keypad [P]anic Alarm
Fail to Report In
Keypad [F]ire Restore
Keypad [A]uxiliary Restore
Keypad [P]anic Restore
For Future Use

[330]-[332] Tamper Reporting Codes

Section

[330]

Zone 1	Zone 2	Zone 3	Zone 4	Zone 5	Zone 6	Zone 7	Zone 8
Zone 9	Zone 10	Zone 11	Zone 12	Zone13	Zone 14	Zone 15	Zone 16

[331]

Zone 17	Zone 18	Zone 19	Zone 20	Zone 21	Zone 22	Zone 23	Zone 24
Zone 25	Zone 26	Zone 27	Zone 28	Zone 29	Zone 30	Zone 31	Zone 32

[332]

Zone 33	Zone 34

[334]-[336] Tamper Restoral Reporting Codes

Section

[334]

Zone 1	Zone 2	Zone 3	Zone 4	Zone 5	Zone 6	Zone 7	Zone 8
Zone 9	Zone 10	Zone 11	Zone 12	Zone13	Zone 14	Zone 15	Zone 16

[335]

Zone 17	Zone 18	Zone 19	Zone 20	Zone 21	Zone 22	Zone 23	Zone 24
Zone 25	Zone 26	Zone 27	Zone 28	Zone 29	Zone 30	Zone 31	Zone 32

[336]

Zone 33	Zone 34

[338] Miscellaneous Tamper Reporting Codes

General System Tamper

General System Tamper Rest

Keypad Lockout

[339] Closing (Arming) Reporting Codes- Access Codes 1-16

Code 1	Code 2	Code 3	Code 4	Code 5	Code 6	Code 7	Code 8
Code 9	Code 10	Code 11	Code 12	Code 13	Code 14	Code 15	Code 16

[341] Miscellaneous Closing (Arming) Reporting Codes

Closing By Access Code 40

Automatic Zone Bypass

Partial Closing

Special Closing

Exit Fault

[342] Opening (Disarming) Reporting Codes- Access Codes 1-16

Code 1	Code 2	Code 3	Code 4	Code 5	Code 6	Code 7	Code 8

Code 9	Code 10	Code 11	Code 12	Code 13	Code 14	Code 15	Code 16

[344] Miscellaneous Opening (Disarming) Reporting Codes

	Opening By Access Code 40
	Special Opening
	Late To Open

[345] Maintenance Alarm Reporting Codes

	Battery Trouble Alarm
	AC Failure Trouble Alarm
	For Future Use
	Fire Trouble Alarm
	Auxiliary Power Supply Trouble Alarm
0 0	TLM Alarm
	General System Trouble
	General System Supervisory Trouble

[346] Maintenance Restore Reporting Codes

	Battery Trouble Restore
	AC Failure Trouble Restore
	For Future Use
	Fire Trouble Restore
	Auxiliary Power Supply Trouble Restore
	TLM Restore
	General System Trouble Restore
	General System Supervisory Restore

[347] Miscellaneous Maintenance Reporting Codes

	Phone #1 FTC Restore
	Phone #2 FTC Restore
	For Future Use
0 0	DLS Lead In
0 0	DLS Lead Out
	General Zone Fault Alarm
	General Zone Fault Restore
	Delinquency Reporting Code
	General Zone Low Battery Alarm
	General Zone Low Battery Restore
0 0	Installer Lead Out
0 0	Installer Lead In
	Phone #3 FTC Restore
	Phone #4 FTC Restore

[348] Test Transmission Reporting Codes

___	Walk Test End
___	Walk Test Begin
___	For Future Use
___	Periodic Test Transmission
___	System Test

[350] Communicator Format Options

1st Telephone Number	2nd Telephone Number	3rd Telephone Number	4th Telephone Number
NA 04 CP 04 EU 04 ___	NA 04 CP 04 EU 04 ___	NA 04 CP 04 EU 04 ___	NA 04 CP 04 EU 04 ___

01 20 BPS, 1400 Hz **02** 20 BPS, 2300 Hz **03** DTMF Contact ID **04** SIA FSK
05 Future Use * **06** Residential Dial

* Failure to communicate using Residential Dial will not generate a FTC trouble.

Refer to Appendix B for additional details.

[351] Alarm/Restore Communicator Call Directions

Opt 1 1st Telephone	Opt 2 2nd Telephone	Opt 3 3rd Telephone	Opt 4 4th Telephone	Opt 5-8 For Future Use
Def ✓ ☐	Def ☐	Def ☐	Def ☐	Def ☐

[359] Tamper Alarm/Restore Communicator Call Directions

Opt 1 1st Telephone	Opt 2 2nd Telephone	Opt 3 3rd Telephone	Opt 4 4th Telephone	Opt 5-8 For Future Use
Def ✓ ☐	Def ☐	Def ☐	Def ☐	Def ☐

[367] Opening/Closing Communicator Call Directions

Opt 1 1st Telephone	Opt 2 2nd Telephone	Opt 3 3rd Telephone	Opt 4 4th Telephone	Opt 5-8 For Future Use
Def ☐	Def ☐	Def ☐	Def ☐	Def ☐

[375] System Maintenance Alarm/Restore Communicator Call Directions

Opt 1 1st Telephone	Opt 2 2nd Telephone	Opt 3 3rd Telephone	Opt 4 4th Telephone	Opt 5-8 For Future Use
Def ✓ ☐	Def ☐	Def ☐	Def ☐	Def ☐

[376] System Test Transmissions Communicator Call Directions

Opt 1 1st Telephone	Opt 2 2nd Telephone	Opt 3 3rd Telephone	Opt 4 4th Telephone	Opt 5-8 For Future Use
Def ✓ ☐	Def ☐	Def ☐	Def ☐	Def ☐

[377] Communication Variables

NA 003	CP 001	EU 003	Swinger Shutdown (Alarms & Rest)	000-014, 000=Disabled
003	003	003	Swinger Shutdown (Tampers & Rest)	000-014, 000=Disabled
003	003	003	Swinger Shutdown (Maint & Rest)	000-014, 000=Disabled
000	030	000	Communication Delay	000-255 Seconds, 000 = No Delay
030	030	030	AC Failure Communication Delay	000-255 Mins/Hrs, 000 = No Delay
010	010	010	TLM Trouble Delay	000-255 x 3 Seconds, 000 = No Delay
030	030	030	Test Transmission Cycle (Land-Line)	000-255 Hrs/Days, 000=disabled
060	060	060	For Future Use	
007	007	007	Wireless Device Low Battery Transmission Delay	000-255 Days, 000 = No Delay
030	030	030	Delinquency Transmission Delay	000-255 Hrs/Days, 000=disabled
000	005	000	Communications Cancel Window	005-255 Minutes (CP-01 Only)

[378] Test Transmission Time of Day

Def 9999 ____ Valid entries are (0000-2359), 9999 to disable

[380] First Communicator Options

Opt	NA CP EU	ON	OFF
1	✓ ✓ ✓	☐ Communications Enabled	☐ Communications Disabled
2		☐ Restores On Siren Time-Out	☐ Restores Follow Zones
3		☐ Pulse Dialing	☐ DTMF Dialing
4		For Future Use	
5		For Future Use	
6		☐ Alternating Backup Dial	☐ Call Primary Number, Backup To Secondary
7		For Future Use	
8		☐ Delinquency Follows Zone Activity (Hours)	☐ Delinquency Follows Arming (Days)

[381] Second Communicator Options

Opt	NA CP EU	ON	OFF
1		☐ Opening After Alarm Ringback Enabled	☐ Open After Alarm Ringback Disabled
2		For Future Use	
3		☐ SIA Uses Programmed Rep. Codes	☐ SIA Uses Automatic Rep. Codes
4		☐ Closing Confirmation Enabled	☐ Closing Confirmation Disabled
5		For Future Use	
6		For Future Use	
7		☐ Contact I.D. Uses Pgm'd Rep. Codes	☐ Contact I.D. Uses Auto Rep. Codes
8		For Future Use	

[382] Third Communicator Options

Opt	NA CP EU	ON	OFF
1		For Future Use	
2		☐ Alarm Comms During Walk Test Enabled	☐ Alarm Comms During Walk Test Disabled
3	✓	☐ Communications Cancelled Message Enabled	☐ Communications Cancelled Message Disabled
4		☐ Call Waiting Cancel Enabled	☐ Call Waiting Cancel Disabled
5		☐ GPRS/Ethernet Module Enabled	☐ GPRS/Ethernet Module Disabled
6		☐ System AC Failure Communication Delay In Hours	☐ System AC Failure Communication Delay In Minutes
7		☐ # of Dialing Attempts is 1 For Residential Dial	☐ # of Dialing Attempts is 5 For Residential Dial
8		For Future Use	

[383] Fourth Communicator Options

Opt	NA CP EU	ON	OFF
1		For Future Use	
2	✓ ✓ ✓	☐ Phone Number 2 Backs Up Number 1	☐ Phone Number 2 is Independent
3		☐ Phone Number 3 Backs Up Number 2	☐ Phone Number 3 is Independent
4		☐ Phone Number 4 Backs Up Number 3	☐ Phone Number 4 is Independent
5		☐ FTCed Events Communicate	☐ FTC'ed Events Do Not Communicate
6	✓ ✓	☐ Account Code Error Check Enabled	☐ Account Code Error Check Disabled
7		For Future Use	
8		For Future Use	

[389] GPRS/Ethernet Fault Check Timer

Def 005 ___ Valid entries are 003-255 x 3 seconds (E.g., 003x3 = 9 seconds).

[401] First Downloading Options

Opt	NA CP EU	ON	OFF
1		☐ Answering Machine / Double Call Enabled	☐ Answ. Machine / Double Call Disabled
2	✓ ✓ ✓	☐ User Enable DLS	☐ User Can Not Enable DLS Window
3		☐ Call-Back Enabled	☐ Call-Back Disabled
4		☐ User Initiated Call-Up Enabled	☐ User Initiated Call-Up Disabled
5		For Future Use	
6		☐ Call Up is 300 Baud	☐ Call Up is 110 Baud
7		For Future Use	
8		For Future Use	

[402] Downloading Computer's Telephone Number (32 Digits)

D _

[403] Downloading Access Code

NA 915500 CP 915500 EU 915500

_ _ _ _ _ _

[404] Panel Identification Code

NA 915500 CP 915500 EU 915500

_ _ _ _ _ _

[405] Double Call Timer

NA 030 CP 030 EU 030 _ _ _ Valid entries are (000-255) seconds

[406] Number of Rings To Answer On

NA 000 CP 000 EU 000 _ _ _ Valid entries are (000-255) rings

[499] Initiate PC-Link Downloading

Enter **[499] [Installer Code][499]** to initiate downloading

[501]-[502] PGM ATTRIBUTES (bits 1 to 8)

PGM Attribute Defaults (OFF unless indicated otherwise)

Attribute: ✓ ON / OFF — PGM Option	1 Not Used -	2 Not Used -	3 True Output Inverted	4 Follows Timer ON/OFF	5 Code Req. No Code	6 Not Used No	7 Not Used No	8 Not Used No
00 Null Pgm (Not Used)								
01 Burglary And Fire Siren Output			✓					
02 Not Used								
03 Not Used								
04 Not Used								
05 Armed Status			✓					
06 Ready To Arm			✓					
07 Keypad Buzzer Follow			✓					
08 Courtesy Pulse			✓					
* 09 System Trouble Output (with Trouble	✓	✓	✓	✓	✓	✓	✓	✓
* 10 System Event (with Event Options)	✓	✓	✓	✓	✓	✓	✓	
11 System Tamper (All Sources)			✓					
12 TLM And Alarm			✓					
13 Not Used								
14 Not Used								
15 Not Used								
16 Not Used								
17 Away Armed Status			✓					
18 Stay Armed Status			✓					
19 Command Output #1 (*71)			✓	✓	✓			
20 Command Output #2 (*72)			✓	✓				
30 Future Use								
33 Future Use								
34 Future Use								
* 40 Audio Verification Trigger								

* Attributes for Option 9 & 10

Attribute:	1	2	3	4	5	6	7	8
ON	Service Req Event	AC Fail	TLM Fault	FTC	Device Fault	Device Tamper	Device Low	Loss of Clock
OFF	Disabled	Disabled	Disabled	Disabled	Disabled	Disabled	Disabled	Disabled
09 System Trouble	✓	✓	✓	✓	✓	✓	✓	✓

Attribute:	1	2	3	4	5	6	7	8
ON	Burg Event	Fire Event	Panic Event	Medical Event	Supervisory Event	Priority Event	Duress Event	Follows Timer
OFF	Disabled	Disabled	Disabled	Disabled	Disabled	Disabled	Disabled	Latched
10 System Event	✓	✓	✓	✓	✓	✓	✓	

Sect	PGM	PGM Type	1	2	3	4	5	6	7	8
[501]	1	___	☐	☐	☐	☐	☐	☐	☐	☐
[502]	2	___	☐	☐	☐	☐	☐	☐	☐	☐

[591-592] Inactivity Timers 1 & 2 Start and End Times

Sect	NA	CP	EU	Start Time	NA	CP	EU	End Time	Valid times are
[591] Timer #1	9999	9999	9999	____	9999	9999	9999	____	00:00 - 23:59 Hrs
[591] Timer #2	9999	9999	9999	____	9999	9999	9999	____	9999 to disable

[600] 2-Way Audio Control Options

Opt	NA	CP	EU	ON	OFF
1				☐ Tampers Enabled	☐ Tampers Disabled
2				☐ Openings & Closings Enabled	☐ Openings & Closings Disabled
3	✓	✓	✓	☐ [A] Key Alarm Enabled	☐ [A] Key Alarm Disabled
4	✓	✓	✓	☐ [P] Key Alarm Enabled	☐ [P] Key Alarm Disabled
5	✓	✓	✓	☐ Duress Alarm Enabled	☐ Duress Alarm Disabled
6	✓	✓	✓	☐ Opening After Alarm Enabled	☐ Opening After Alarm Disabled
7				☐ Siren Active During 2-Way Audio	☐ Siren Silent During 2-Way Audio
8				For Future Use	

[609] Module Tamper Reporting Codes

___	Keypad 1 Tamper	___	Siren 1 Tamper
___	Keypad 2 Tamper	___	Siren 2 Tamper
___	Keypad 3 Tamper	___	Siren 3 Tamper
___	Keypad 4 Tamper	___	Siren 4 Tamper
___	Keypad 1 Tamper Restore	___	Siren 1 Tamper Restore
___	Keypad 2 Tamper Restore	___	Siren 2 Tamper Restore
___	Keypad 3 Tamper Restore	___	Siren 3 Tamper Restore
___	Keypad 4 Tamper Restore	___	Siren 4 Tamper Restore

[610] Alternate Communicator Receiver Trouble Reporting Codes

___	Receiver 1 Trouble	___	Receiver 1 Trouble Restore
___	Receiver 2 Trouble	___	Receiver 2 Trouble Restore
___	Receiver 3 Trouble	___	Receiver 3 Trouble Restore
___	Receiver 4 Trouble	___	Receiver 4 Trouble Restore
___	General Alternate Communicator Trouble	___	General Alternate Communicator Trouble Restore

[700] Automatic Clock Adjust

NA 60 CP 60 EU 60 ___ Valid entries are (00-99) seconds

[701] First International Options

Opt	NA	CP	EU	ON	OFF
1			✓	☐ 50 Hz AC Input	☐ 60 Hz AC Input
2				☐ Time Base is Internal Crystal	☐ Time Base is AC Line
3				☐ AC/DC Arming Inhibit Enabled	☐ AC/DC Arming Inhibit Disabled
4				☐ All System Tampers Require Installer Reset	☐ All System Tampers Follow Restore
5				☐ 6-Digit User Access Codes	☐ 4-Digit User Access Codes
6				☐ Busy Tone Detection Enabled	☐ Busy Tone Detection Disabled
7				For Future Use	
8				For Future Use	

[702] Second International Options

Opt	NA	CP	EU	ON	OFF
1				☐ Pulse Dialing Make/Break Ratio is 33/67	☐ Pulse Dialing Make/Break Ratio is 40/60
2	✓	✓	✓	☐ Force Dialing Enabled	☐ Force Dialing Disabled
3				For Future Use	
4				☐ 1600 Hz Handshake	☐ Standard Handshake
5				☐ ID Tone Enabled	☐ ID Tone Disabled
6				☐ 2100 Hz ID Tone	☐ 1300 Hz ID Tone
7				For Future Use	
8				For Future Use	

[703] Delay Between Dialing Attempts

NA 003 CP 003 EU 003 ___ ___ ___ Valid entries are (000-255) + 5 seconds (e.g., 007=12 seconds)

[800] Door Chime Options for Zones 01-34

Option		1	2	3	4
	ON	6 Beeps	Bing Bing	Ding Dong	Alarm
	OFF	Disabled	Disabled	Disabled	Disabled
Sect	Zone	Def	Def	Def	Def
[01]	1	✓ ☐	☐	☐	☐
[02]	2	✓ ☐	☐	☐	☐
[03]	3	✓ ☐	☐	☐	☐
[04]	4	✓ ☐	☐	☐	☐
[05]	5	✓ ☐	☐	☐	☐
[06]	6	✓ ☐	☐	☐	☐
[07]	7	✓ ☐	☐	☐	☐
[08]	8	✓ ☐	☐	☐	☐
[09]	9	✓ ☐	☐	☐	☐
[10]	10	✓ ☐	☐	☐	☐
[11]	11	✓ ☐	☐	☐	☐
[12]	12	✓ ☐	☐	☐	☐
[13]	13	✓ ☐	☐	☐	☐
[14]	14	✓ ☐	☐	☐	☐
[15]	15	✓ ☐	☐	☐	☐
[16]	16	✓ ☐	☐	☐	☐
[17]	17	✓ ☐	☐	☐	☐

Option		1	2	3	4
	ON	6 Beeps	Bing Bing	Ding Dong	Alarm
	OFF	Disabled	Disabled	Disabled	Disabled
Sect	Zone	Def	Def	Def	Def
[18]	18	✓ ☐	☐	☐	☐
[19]	19	✓ ☐	☐	☐	☐
[20]	20	✓ ☐	☐	☐	☐
[21]	21	✓ ☐	☐	☐	☐
[22]	22	✓ ☐	☐	☐	☐
[23]	23	✓ ☐	☐	☐	☐
[24]	24	✓ ☐	☐	☐	☐
[25]	25	✓ ☐	☐	☐	☐
[26]	26	✓ ☐	☐	☐	☐
[27]	27	✓ ☐	☐	☐	☐
[28]	28	✓ ☐	☐	☐	☐
[29]	29	✓ ☐	☐	☐	☐
[30]	30	✓ ☐	☐	☐	☐
[31]	31	✓ ☐	☐	☐	☐
[32]	32	✓ ☐	☐	☐	☐
[33]	33	✓ ☐	☐	☐	☐
[34]	34	✓ ☐	☐	☐	☐

[804][001]-[032] Wireless Device Serial Numbers

Zone	Sub Sect.	Serial Number	Zone	Sub Sect.	Serial Number	Zone	Sub Sect.	Serial Number
1	[001]		12	[012]		23	[023]	
2	[002]		13	[013]		24	[024]	
3	[003]		14	[014]		25	[025]	
4	[004]		15	[015]		26	[026]	
5	[005]		16	[016]		27	[027]	
6	[006]		17	[017]		28	[028]	
7	[007]		18	[018]		29	[029]	
8	[008]		19	[019]		30	[030]	
9	[009]		20	[020]		31	[031]	
10	[010]		21	[021]		32	[032]	
11	[011]		22	[022]				

[804][081] Wireless Supervisory Windows

NA 96 CP 96 EU 08 _____ 1-way Wireless Supervisory Window

Value = Entry x 15 minutes. E.g., 6x15 minutes equals 1.5 hrs. Valid entries are 4-96 (1Hr - 24Hr)

[804][082]-[085] Zone Transmitter Supervision Options

	[082]		[083]		[084]		[085]	
Option	Zone	Def	Zone	Def	Zone	Def	Zone	Def
1	1	✓ ☐	9	✓ ☐	17	✓ ☐	25	✓ ☐
2	2	✓ ☐	#	✓ ☐	18	✓ ☐	26	✓ ☐
3	3	✓ ☐	#	✓ ☐	19	✓ ☐	27	✓ ☐
4	4	✓ ☐	#	✓ ☐	20	✓ ☐	28	✓ ☐
5	5	✓ ☐	#	✓ ☐	21	✓ ☐	29	✓ ☐
6	6	✓ ☐	#	✓ ☐	22	✓ ☐	30	✓ ☐
7	7	✓ ☐	#	✓ ☐	23	✓ ☐	31	✓ ☐
8	8	✓ ☐	#	✓ ☐	24	✓ ☐	32	✓ ☐

[804][101]-[182] Wireless Key Programming (1-way & 2-way devices)

	Sub Sect.	Serial Number	Sub Sect.	Wireless key Programming #1 Def 03	#2 Def 04	#3 Def 27	#4 Def 30	#5 Def 13	#6 Def 14	Enable/Disable Sub Sect.	Def
1	[101]		[141]							[181]	✓ ☐
2	[102]		[142]								✓ ☐
3	[103]		[143]								✓ ☐
4	[104]		[144]								✓ ☐
5	[105]		[145]								✓ ☐
6	[106]		[146]								✓ ☐
7	[107]		[147]								✓ ☐
8	[108]		[148]								✓ ☐

	Sub Sect.	Serial Number	Sub Sect.	#1 Def 03	#2 Def 04	#3 Def 27	#4 Def 30	#5 Def 13	#6 Def 14	Sub Sect.	Def
9	[109]		[149]							[182]	✓ ☐
10	[110]		[150]								✓ ☐
11	[111]		[151]								✓ ☐
12	[112]		[152]								✓ ☐
13	[113]		[153]								✓ ☐
14	[114]		[154]								✓ ☐
15	[115]		[155]								✓ ☐
16	[116]		[156]								✓ ☐

Refer to section [804][141]-[156] in the Programming Descriptions section of this guide and in the wireless key installation sheet.

[804][201]-[204] Wireless Keypad Serial Numbers

Keypad	Sub Sect.	Serial Number
1	[201]	
2	[202]	
3	[203]	
4	[204]	

[804][301]-[304] Wireless Siren Serial Numbers

Siren	Sub Sect.	Serial Number
1	[301]	
2	[302]	
3	[303]	
4	[304]	

[804][311] Wireless Siren #01 Options

Opt	NA	CP	EU	ON	OFF
1	✓	✓	✓	☐ Siren Alarm Enabled	☐ Siren Alarm Disabled
2	✓	✓		☐ Buzzer Notifications Enabled	☐ Buzzer Notifications Disabled
3	✓	✓		☐ Door Chime Enabled	☐ Door Chime Disabled
4	✓	✓		☐ Trouble Beeps Enabled	☐ Trouble Beeps Disabled
5				☐ Squawks Enabled	☐ Squawks Disabled
6			✓	☐ Enable Strobe	☐ Disable Strobe
7			✓	☐ Buzzer Alarm / Strobe Follows BTO	☐ Buzzer Alarm / Strobe Follows Alarm Condition
8			✓	☐ Siren Tamper Enabled	☐ Siren Tamper Disabled

[804][312] Wireless Siren #02 Options

Opt	NA	CP	EU	ON	OFF
1	✓	✓	✓	☐ Siren Alarm Enabled	☐ Siren Alarm Disabled
2	✓	✓		☐ Buzzer Notifications Enabled	☐ Buzzer Notifications Disabled
3	✓	✓		☐ Door Chime Enabled	☐ Door Chime Disabled
4	✓	✓		☐ Trouble Beeps Enabled	☐ Trouble Beeps Disabled
5				☐ Squawks Enabled	☐ Squawks Disabled
6			✓	☐ Enable Strobe	☐ Disable Strobe
7			✓	☐ Buzzer Alarm / Strobe Follows BTO	☐ Buzzer Alarm / Strobe Follows Alarm Condition
8			✓	☐ Siren Tamper Enabled	☐ Siren Tamper Disabled

[804][313] Wireless Siren #03 Options

Opt	NA	CP	EU	ON	OFF
1	✓	✓	✓	☐ Siren Alarm Enabled	☐ Siren Alarm Disabled
2	✓	✓		☐ Buzzer Notifications Enabled	☐ Buzzer Notifications Disabled
3	✓	✓		☐ Door Chime Enabled	☐ Door Chime Disabled
4	✓	✓		☐ Trouble Beeps Enabled	☐ Trouble Beeps Disabled
5				☐ Squawks Enabled	☐ Squawks Disabled
6			✓	☐ Enable Strobe	☐ Disable Strobe
7			✓	☐ Buzzer Alarm / Strobe Follows BTO	☐ Buzzer Alarm / Strobe Follows Alarm Condition
8			✓	☐ Siren Tamper Enabled	☐ Siren Tamper Disabled

[804][314] Wireless Siren #04 Options

Opt	NA	CP	EU	ON	OFF
1	✓	✓	✓	☐ Siren Alarm Enabled	☐ Siren Alarm Disabled
2	✓	✓		☐ Buzzer Notifications Enabled	☐ Buzzer Notifications Disabled
3	✓	✓		☐ Door Chime Enabled	☐ Door Chime Disabled
4	✓	✓		☐ Trouble Beeps Enabled	☐ Trouble Beeps Disabled
5				☐ Squawks Enabled	☐ Squawks Disabled
6			✓	☐ Enable Strobe	☐ Disable Strobe
7			✓	☐ Buzzer Alarm / Strobe Follows BTO	☐ Buzzer Alarm / Strobe Follows Alarm Condition
8			✓	☐ Siren Tamper Enabled	☐ Siren Tamper Disabled

[804][320] Global Siren Options

Opt	NA	CP	EU	ON	OFF
1				☐ Tamper Activates Siren/Strobe While Armed	☐ Tamper Doesn't Activate Siren/Strobe While Armed
2				☐ Pre-Alarm Signal Enabled	☐ Pre-Alarm Signal Disabled
3				For Future Use	☐ Strobe Squawks Disabled
4				For Future Use	
5				For Future Use	
6				For Future Use	
7				For Future Use	
8				For Future Use	

[804][330] Maximum Outdoor Siren Activation Timer

NA 010 CP 010 EU 010 ___ Valid Entries (001-255) minutes

[804][900] General Wireless Options

Opt	NA	CP	EU	ON	OFF
1				For Future Use	
2				For Future Use	
3				For Future Use	
4				For Future Use	
5				For Future Use	
6				For Future Use	
7	✓	✓		☐ RF Jam Disabled	☐ RF Jam Enabled
8	✓	✓	✓	☐ Global Module Placement Test	☐ Individual Module Placement Test

[851] GPRS/Ethernet Module Programming

These sections are programmed using Connect 24 (NA) or DLS IV (International). For more information regarding the availability of these programming sections, refer to the TL/GS manual.

[851][001] Ethernet IP Address (Programmed)

Def 192.168.0.99 ___ . ___ . ___ . ___ 0.0.0.0 Indicates Dynamic Addressing

[851][002] Ethernet IP Subnet Mask

Def 255.255.255.0 ___ . ___ . ___ . ___

[851][003] Ethernet Gateway IP Address

Def 0.0.0.0 ___ . ___ . ___ . ___

[851][004] Heartbeat Interval

Def 0087 ____ Valid Entries are 0000-FFFF Seconds (E.g. 0087 = 135 seconds)

Opt	NA	CP	EU	ON	OFF
1				☐ Ethernet Receiver #1 Supervised	☐ Ethernet Receiver #1 Not Supervised
2				☐ GPRS Receiver #1 Supervised	☐ GPRS Receiver #1 Not Supervised
3				☐ Commercial Supervision	☐ Residential Supervison
* 4	✓	✓	✓	☐ GPRS Primary	☐ Ethernet Primary
5				☐ Redundant Communications Enabled	☐ Redundant Communications Disabled
6	✓	✓	✓	☐ Remote Firmware Upgrade Enabled	☐ Remote Firmware Upgrade Disabled
7				☐ For Future Use	
8				☐ For Future Use	

* Default ON Applies to GS2065 Models Only

[851][011] GPRS/Ethernet Installer Code

Def CAFE ____ Valid Entries are 0000 to FFFF hexadecimal.

[851][012] DLS Incoming Local Port

Def OBF6 / 3062 ____

[851][013] DLS Outgoing Local Port

Def OBF8 / 3066 ____

Valid Port Entries are 0000-FFFF (0-65535)

[851][021] Account Code

Def FFFFFF ____

Valid Port Entries are 0000-FFFF (0-65535)

[851][023] Panel Absent Trouble Reporting Code

Def FF ____ Valid range 00-FF

[851][024] Panel Absent Trouble Restore Reporting Code

Def FF ____ Valid range 00-FF

[851][025] Radio Activation Restore (NA Only)

Def FF ____ Valid range 00-FF

[851][026] Ethernet 1 Test Transmission

Def FF ____

[851][028] GPRS 1 Test Transmission

Def FF ____ Valid range 00-FF

[851][029] GPRS 2 Test Transmission

Def FF ____

[851][030] FTC Restore

Def FF ____ Valid range 00-FF

[851][101] Ethernet Receiver#1 Account Code

Def FFFFFFFFFF ____

[851][102] Ethernet Receiver#1 DNIS

Def 000000 ____

Valid range is 000000 - FFFFFF Hexadecimal

[851][103] Ethernet Receiver#1 IP Address

Def 127.0.0.1 ___ • ___ • ___ • ___

[851][104] Ethernet Receiver#1 Remote Port

Def OBF5 / 3061 ____

[851][105] Ethernet Receiver#1 Local Port

Def OBF4 / 3060 ____

Valid Port Entries are 0000-FFFF (0-65535)

[851][111] Ethernet Receiver#2 Account Code

Def FFFFFFFFFF ____

[851][112] Ethernet Receiver#2 DNIS

Def 000000 ____

[851][113] Ethernet Receiver#2 IP Address

Def 0.0.0.0 ___ • ___ • ___ • ___

[851][114] Ethernet Receiver#2 Remote Port

[851][115] Ethernet Receiver#2 Local Port

Def OBF5 / 3061 ____ Def OBF9 / 3065 ____

Valid Port Entries are 0000-FFFF (0-65535)

[851][124] Ethernet Test Transmission Time

Def 9999 ____

Valid Entries are 0000-2359, 9999 to disable

[851][125] Ethernet Test Transmission Cycle

Def 000000 ____ DDHHMM

[851][203] GPRS Receiver#1 IP Address

Def 0.0.0.0 ___ . ___ . ___ . ___

[851][204] GPRS Receiver#1 Remote Port

Def 3061 ____ Valid Port Entries are 0000-FFFF (0-65535)

[851][205] GPRS Receiver#1 Access Point Name (APN)

The following are 32 Character ASCII Codes

____

[851][211] GPRS Receiver#2 Account Code

Def FFFFFFFF ____

[851][212] GPRS Receiver#2 DNIS

Def 000000 ____

[851][213] GPRS Receiver#2 IP Address

Def 0.0.0.0 ___ . ___ . ___ . ___

[851][214] GPRS Receiver#2 Remote Port

Def OBF5/3061 ____ Valid Port Entries are 0000-FFFF (0-65535)

[851][215] GPRS Receiver#2 Access Point Name (APN)

The following are 32 Character ASCII Codes

____

[851][221] GPRS Public Access Point Name (APN)

The following are 32 Character ASCII Codes

____

[851][222] GPRS Login User Name

The following are 32 Character ASCII Codes

____

[851][223] GPRS Login Password

The following are 32 Character ASCII Codes

____

[851][224] GPRS Test Transmission Time

Def 9999 ____

Valid Entries are 0000-2359, 9999 or FFFF to disable

[851][225] GPRS Test Transmission Cycle

Def 000000 _____ DDHHMM

[851][991] Firmware Version

Def 01.00.01.TT ___ . ___ . ___ . ___

[851][992] Ethernet IP Address

Def 0.0.0.0 ___ . ___ . ___ . ___

[851][993] Ethernet Gateway IP Address

Def 0.0.0.0 ___ . ___ . ___ . ___

[851][994] GPRS IP Address

Def 0.0.0.0 ___ . ___ . ___ . ___

[851][995] SIM Number

i *The following are 32 Character ASCII Codes*

_____

[851][996] GSM Phone Number

i *The following are 32 Character ASCII Codes*

_____

[851][997] IMEI Number (GSM/Ethernet Module Serial Number)

i *The following are 16 Character ASCII Codes*

_____

[851][998] MAC Address (Unique to Each Module)

Def N/A ___ . ___ . ___ . ___ . ___ . ___

[851][999] Software Default

i *Enter 00 to reset the panel to factory default.*

i *Enter 55 to restart the panel (unplug the power cable from the analogue module).*

[898] Wireless Device Enrollment See 2.3 "Wireless Device Enrollment"

[899] Template Programming See 4.1 "Template Programming"

[900] Panel Version

____ Not Programmable (e.g., Ver 1.0 = 0100)

[904] Wireless Zone Module Placement Test

Enter [904]. See Chapter 2.4 for details

[905] Wireless Keypad Placement Test

Enter [905]. See Chapter 2.4 for details

[906] Wireless Siren Placement Test

Enter [906]. See Chapter 2.4 for details.

[990] Installer's Lockout Enable

Enter [990][Installer Code][990] to enable Installer Lockout

[991] Installer's Lockout Disable

Enter [991][Installer Code][991] to disable Installer Lockout

[996] Restore 9155 Wireless Device Programming Factory Defaults

Enter [996][Installer Code][996]

[998] Restore 9155 Panel Only) Factory Default

Enter [998][Installer Code][998]

[999] System Default

Enter [999][Installer Code][999] See Chapter 6.3 Resetting the System to Factory Defaults

Keypad Programming

Enter [*] when in Installer Programming to access Keypad Programming

[000] Keypad Function Key Programming

Function Key Options

[00] Null Key
[01] Future Use
[02] Future Use
[03] Stay Arm
[04] Away Arm
[05] No Entry Arm
[06] Chime On/Off
[07] Future Use
[08] Bypass
[09] Future Use
[10] Future Use
[11] Future Use
[12] Future Use
[13] Command Output #1
[14] Command Output #2
[15] Future Use
[16] Quick Exit
[17] Reactivate Stay/Away Zones
** [25] Instant Stay Arm
* [27] Disarm
*** [29] [A]ux Alarm
* [30] [P]anic
[33] Night Arm

*Applies to Key Fobs only
(See Section [804] Subsection [141]-[156])
** Do not use this function key on CP-01 panels
***Aux Alarm key not intended for medical signals

	Def Key 1	Def Key 2	Def Key 3	Def Key 4	Def Key 5
Keypad 1	0 3	0 4	0 6	0 8	1 6
Keypad 2	0 3	0 4	0 6	0 8	1 6
Keypad 3	0 3	0 4	0 6	0 8	1 6
Keypad 4	0 3	0 4	0 6	0 8	1 6

[001]-[034] Label Programming (Zone 01-34)

Def Z O N E — — — — X X — — — — X X = 01-34

Zone	Sect.	Label	Zone	Sect.	Label
1	[001]		9	[009]	
2	[002]		10	[010]	
3	[003]		11	[011]	
4	[004]		12	[012]	
5	[005]		13	[013]	
6	[006]		14	[014]	
7	[007]		15	[015]	
8	[008]		16	[016]	

[001]-[034] Label Programming (Zone 01-34) continued

17	[017]		26	[026]	
18	[018]		27	[027]	
19	[019]		28	[028]	
20	[020]		29	[029]	
21	[021]		30	[030]	
22	[022]		31	[031]	
23	[023]		32	[032]	
24	[024]		33	[033]	
25	[025]		34	[034]	

[065] Fire Alarm Label (2 x 14 Characters)

Def F I R E — Z O N E — — — — —
— — — — — — — — — — — — — —

[066] Fail To Arm Event Message (2 x 16 Characters)

Def S Y S T E M — H A S — — — — — —
F A I L E D — T O — A R M — — —

[067] Alarm When Armed Event Message (2 x 16 Characters)

Def A L A R M — O C C U R R E D — —
W H I L E — A R M E D — — — < >

[074] First Keypad Options

Opt	NA	CP	EU	ON	OFF
1	✓	✓	✓	☐ [F] Key Enabled	☐ [F] Key Disabled
2	✓	✓	✓	☐ [A] Key Enabled	☐ [A] Key Disabled
3	✓	✓	✓	☐ [P] Key Enabled	☐ [P] Key Disabled
4	✓	✓	✓	☐ Quick Arm Prompt On	☐ Quick Arm Prompt Off
5				☐ Quick Exit Prompt On	☐ Quick Exit Prompt Off
6	✓	✓	✓	☐ Bypass Options Prompt On	☐ Bypass Options Prompt Off
7	✓	✓	✓	☐ User Initiated Call-Up Prompt On	☐ User Initiated Call-Up Prompt Off
8	✓	✓	✓	☐ Hold [P]anic Key Prompt On	☐ Hold [P]anic Key Prompt Off

[075] Second Keypad Options

Opt	NA	CP	EU	ON	OFF
1	✓	✓	✓	☐ Local Clock Display Enabled	☐ Local Clock Display Disabled
2				☐ Local Clock Displays 24 Hr Time	☐ Local Clock Displays AM/PM
3	✓	✓	✓	☐ Auto Alarm Scroll Enabled	☐ Auto Alarm Scroll Disabled
4	✓	✓	✓	☐ Language Selection Available From Any Menu	☐ Language Selection Available From Installer's Only
5				☐ Power LED Enabled	☐ Power LED Disabled
6	✓	✓	✓	☐ Power LED Indicates AC Present	☐ Power LED Indicates AC Absent
7	✓	✓	✓	☐ Alarms Are Displayed While Armed	☐ Alarms Are Not Displayed While Armed
8				☐ Auto Scroll Open Zones Enabled	☐ Auto Scroll Open Zones Disabled

[076] Third Keypad Options

Opt	NA	CP	EU	ON	OFF
1				For Future Use	
2				For Future Use	
3				For Future Use	
4				For Future Use	
5	✓	✓	✓	☐ Late To Open Prompts Enabled	☐ Late To Open Prompts Disabled
6	✓	✓	✓	☐ Power Save Mode On	☐ Power Save Mode Off
7				For Future Use	
8				For Future Use	

[077] LCD Message (2 x 16 Characters)

Def — — — — — — — — — — — — — — — —
— — — — — — — — — — — — — — — —

[078] Downloaded Message Duration

Def 003 ___ Valid entries are 000-255, 000 = Continuous Display

[100] CO Detector Alarm Label (2 x 14 Characters)

Def C O — A L A R M — — — — — —
E V A C U A T E — A R E A —

[101] System Label (2 x 14 Characters)

Def S Y S T E M — — — — — — — —
— — — — — — — — — — — — — —

[120] Command Output 1 Label (2 x 14 Characters)

Def C O M M A N D — O / P — 1 —
— — — — — — — — — — — — — —

[121] Command Output 2 Label (2 x 14 Characters)

Def C O M M A N D — O / P — 2 —
— — — — — — — — — — — — — —

[996] Label Default

Enter [996][Installer Code][996]

[997] Keypad version

Enter [997][Installer Code][997] Read Only (e.g., 1234 = version 12.34)

[998] Initiate Global Label Broadcast

Enter [998][Installer Code][998] Note: Label Broadcast must be initiated by Keypad 1.

[999] Reset All Keypad Programming To Factory Defaults

Enter [999][Installer Code][999]

5.3 Programming Descriptions

This section describes all of the PC9155 programming options.

[001]-[002] Zone Definitions

Each of these sections requires a 2-digit entry to determine how a zone functions. Refer to sections **[132]** to **[134]** for zone attribute programming.

Zone Types

i *Fire zones and 24-Hr zones go into alarm whether the system is armed or disarmed and do not follow the exit delay.*

00 **Null Zone:** This zone type is intended for zones that are NOT used.

01 **Delay 1:** This zone type follows the Entry Delay 1 and Exit Delay timers programmed in section **[005]** and is normally used for entry/exit doors. The exit delay starts as soon as the panel is armed. The zone may be opened and closed during the delay time without causing an alarm. After the exit delay time has expired, opening the zone starts the entry delay timer. During the entry delay time, the keypad buzzer sounds steadily to advise the user that the system should be disarmed. If the panel is disarmed before the entry delay expires, no alarm is generated.

02 **Delay 2:** This zone type operates the same as the Delay 1 **[01]** zone except it follows the Entry Delay 2 time which is set in section **[005]**.

03 **Instant:** This zone type is normally used for door/window contacts, but is instant when opened after the exit delay expires.

04 **Interior:** This zone type is used with interior motion detectors. Interior zones have an exit delay and an entry delay if a delay type zone has been violated first. The zone goes into alarm when the entry delay of the delay type zone has expired, if the system has not been disarmed. If the protected area is entered without entering the delayed entrance and an interior zone is violated, an immediate alarm is generated.

05 **Interior Stay/Away:** If the system is Stay armed, this zone type is bypassed. If the system is Away armed, the zone acts like an interior type zone **[04]**.

06 **Delay Stay/Away:** If the system is Stay armed, this zone type is bypassed. If the system is Away armed, this zone will always follow the entry delay time for Entry Delay 1 when violated.

i *The automatic bypass on Stay/Away type zones is NOT removed by any event other than a valid exit through a delay type 1 zone during the exit delay, arming using the Away function key or by pressing [✱][1] while armed.*

07-08 For Future Use

09 **24 Hour Supervisory (Hardwired):** The zone is similar to a fire zone. Supervision options (NC, EOL, and DEOL) do not affect the functionality of the zone. The Restored state of this zone type is 5.6 K zone end-of-line, the Alarm state is short and the Trouble state is open.

i *This zone type must not be used for wireless zones.*

10 **24 Hour Supervisory Buzzer:** When violated, the system buzzer will sound steady at medium volume until a valid access code is entered.

11 **24 Hour Burglary:** This zone type is active at all times. It reports an alarm if the panel is armed or disarmed. This zone type sounds the bell for the length of Bell cut-off (section **[005]**) if the audible attribute is enabled.

12 For Future Use

13 **24 Hour Gas:** Similar to 24 Hour Burglary except for System Event output type and SIA identifier.

15 **24 Hour Medical:** Similar to 24 Hour Burglary except for System Event output type and SIA identifier.

16 **24 Hour Panic:** Similar to 24 Hour Burglary except for System Event output type and SIA identifier.

17 **24 Hour Emergency:** Similar to 24 Hour Burglary except for System Event output type and SIA identifier.

18 For Future Use

19 **24 Hour Water:** Similar to 24 Hour Burglary except for System Event output type and SIA identifier.

20 **24 Hour Freeze:** Similar to 24 Hour Burglary except for System Event output type and SIA identifier.

21 For Future Use

22 **Momentary Keyswitch Arm**. A keyswitch device may be connected to the zone programmed as momentary keyswitch arm. Momentary activation of the zone alternately arms/disarms the system and silences alarms. Tampers and faults will only initiate their respective trouble sequence. The keypad will not display an indication when this type of zone is activated.

i *With audible alarm active, using the keyswitch when disarmed is the same as entering an access code at the keypad. Using the keyswitch during the first 30 seconds of a delayed fire alarm is the same as pressing a key at the keypad (the 90 second delay will start).*

The violation of a keyswitch zone arms or disarms the system. Violation of this zone type will NOT be logged or transmit the Police code.

A bypass on this zone type will not be un-bypassed when the system is disarmed. When the zone is bypassed, a zone bypass event buffer log and communication occurs immediately, NOT when the system is armed.

23 **Maintained Keyswitch Arm (Hardwired):** Keyswitch devices can be connected to zones programmed as Maintained Keyswitch arm. In the restored state, the panel is disarmed. The violation of the zone arms the panel. Tampers and faults begin their associated trouble sequence. If the system is armed with this keyswitch, and then disarmed by another method, then the keyswitch zone must be restored and then violated before the system can be armed with this zone again. The same is true for disarming, if the zone is restored and the system armed, the keyswitch zone must be violated and then restored to disarm the system.

This zone type must NOT be used for wireless zones. Activation of a keyswitch zone is intended to arm or disarm the system. Activation of the zone will not log or transmit the Police code. A bypass on this zone type will not be un-bypassed when the system is disarmed. When the zone is bypassed, a zone bypass event buffer log and communication occurs immediately, NOT when the system is armed.
With an audible alarm active, using the keyswitch when disarmed is the same as entering an access code at the keypad. Activating this zone type during the first 30 seconds of a delayed fire alarm is the same as pressing a key at the keypad (the 90 second delay will start). If left in the violated state, the system will not arm until the zone is restored and violated again.

24 For Future Use

25 **Interior Delay Zone:** This zone type is normally used with motion detectors and has a standard exit delay time.
If the panel is Away armed, the Interior Delay Zone will be active at the end of the exit delay. The zone then acts like an interior type zone [04]. If the panel is Stay armed, a violation of this zone type initiates Entry Delay 1. Violating this zone during exit delay will not cause the system to arm in Away mode, as in regular delay type zones.

26 **24 Hour Non-Alarm (or local alarm) Zone.** Zones programmed as this type are active at all times but do not cause an alarm, and are not saved in alarm memory. Zone attributes such as Zone Bypassing and Door Chime will affect the functionality of this zone.

This zone type will sound the bell, but not communicate during a walk test. Tampers and faults on zones programmed as 24-Hour non-alarm type will not cause alarms.

27-30 For Future Use

31 **Day Zone.** Violating this zone when disarmed will sound the keypad buzzer but will not log or report the events. Violating this zone when armed will sound the bell and communicate the event.

32 **Instant, Stay-Away Zone**. This zone is bypassed when the system is Stay armed, but it functions similarly to an Instant Zone [03] when Away armed. This zone type is useful for motion detectors that must NOT follow the entry delay after a delay zone is violated, but must still retain the Stay/Away functionality.

33-35 **For Future Use**

36 **24-Hr. Non-Latching Tamper Zone.** This zone generates a tamper condition when violated. This zone is active when armed or disarmed.

37 **Night Zone.** This zone acts like an interior Stay/Away zone [05] when the panel is armed in any method except the following. When the system is armed in Stay mode and the interior zones are reactivated by the user entering **[✱][1]**, this zone type will not be activated.

81 **24-Hr Carbon Monoxide (CO) Detection.** This zone type is used with a wireless CO detector. This zone definition has a distinct bell cadence in the event of an alarm. The cadence of this alarm is 4 cycles of 100ms on/off pulses, followed by a 5-second pause, and then repeated. After 4 minutes the 5-second pause is extended to 60 seconds in duration. The bell is silenced when an access code is entered or the bell times out.

82 **Audio Verification Monitor.** This zone type is used with the PC5950 audio verification module. This zone definition is used to force mute the bell and sirens during a 2-way audio session.

87 **Delayed 24-Hr Fire (Wireless).** This zone is used with wireless smoke detectors. This zone functions similar to the standard 24 hour fire zone, except the alarm memory and transmission by the communicator is delayed 30 seconds. If the alarm is acknowledged by pressing any key within 30 seconds, the bells will silence and the transmission will be aborted. If the smoke detector is not restored after the alarm has been acknowledged the bell output will activate after 90 seconds. The user then has another 30-second delay before the bell output latches and communications are activated. A code is then required to silence the bell output. A tamper or fault of this zone type will cause a fire trouble to log and transmit.

The fire delay is terminated if a second fire zone is tripped or if the [🔥] key is pressed during a delay.

88 **Standard 24-Hr Fire (Wireless).** This zone is used with wireless smoke detectors. The bell output will sound instantly to indicate that the smoke detector has been activated when violated. If enabled, the communicator will immediately transmit the alarm to the monitoring station. A tamper or fault of this zone type will cause a fire trouble to log and transmit.

Zone attributes should NOT be changed from the default settings for all fire type zones.

89 **Auto Verified Fire Zone (Wireless) (Required for CP-01).** This zone type is to be used with wireless smoke detectors. This zone definition ensures an alarm condition persists by looking for a second alarm transmission or the absence of an alarm restoral condition. The system ignores subsequent alarm transmissions after the first transmission from the same zone for a duration of 40 seconds. If the sensor is in an alarm condition at the end of this 40-second delay, the system will go into full alarm, sounding the bell, logging and communicating the event. If the zone is in a restored condition at the end of the 40-second delay, the system will start another 80 seconds. verification time sequence. If a fire zone goes into alarm during this period, the system will go into full alarm, sounding the bell, logging and communicating the event.

A tamper or fault of this zone type will cause a fire trouble to log and transmit.
The wireless smoke detector that is used with this zone type must have a built-in siren to act as a pre-alert to the system alarm.

Multiple Fire Detections: If another device detects fire during the auto verify or delay sequence, the sequence is immediately terminated and alarms are generated for all pending zones. This applies to all other fire zones or system [🔥] key alarms on the system (i.e., two fire alarms from different devices on the system will cancel all pending fire delays and create immediate alarms).

[005] System Timers

This section has two subsections. Entry/Exit delays are in subsection 01and Bell Cut-off is in subsection 09. Subsections 02-08 are reserved for future use. Enter the corresponding 2-digit entry to access these subsections.

[01] Entry Delay 1: (001-255) seconds

This value determines the entry delay time for delay 1 type zones.

Entry Delay 2: (001-255) seconds

This value determines the entry delay time for delay 2 type zones.

i *The system follows the entry timer that activates first. For example: If a delay type 2 is activated followed by a delay type 1, the system follows the Entry Delay 2 timer. If delay type 1 is activated first, then the system follows the Entry Delay 1 timer.*

Exit Delay: (001-255) seconds

This value determines the exit delay time when arming the system.

[09] Bell Cut-off (Bell Time Out)

This value determines the length of time the bell/siren will sound before automatically turning off. The default bell cut-off time is 4 minutes. Fire alarms will follow the bell cut-off time if section **[014]** option **8** is **OFF** and will be continuous if section **[014]** option **8** is **ON**. The system tamper sounds the bell for the duration programmed in the Bell Cut-off timer as well.
Alarms/Events which cause the keypad buzzer to sound (e.g., 24 hour buzzer zone) do not follow this Bell Cut-off Timer. The buzzer sounds until an access code is entered to silence the condition.

i *Entering '000' in the entry or exit delay sections results in a 225-second timed delay. Entering '000' in the Bell Cut-off section results in a 1-minute bell cut-off time. These times will display as '000', but still function as indicated.*

[006] Installer Code

The Installer's Code is a code that is required to gain access to system configuration programming, [*][8]. The default Installer code is [5555] or [555555] if 6-digit access codes are programmed. See section [701] Opt. [5].

[007] Master Code

The Master Code is a system user code that can program additional access codes, [*][5], and has access to additional user functions, [*][6]. The default Master code is [1234] or [123456] if 6-digit access codes are programmed. See section [701] Opt. [5].

[008] Maintenance Code

The Maintenance Code is a system user code that can only arm and disarm. Any other system function that requires an access code is not accessible by this code. The default Maintenance code is [AAAA] or [AAAA00] if 6-digit access codes are programmed. See section [701] Opt. [5].

[009] I/O Programming

The 2-digit entries made in these sections define the zone type or the PGM type assigned to the I/O terminals. PGM 1/Zone 33 is enabled as a zone or PGM output in section **[013]** option **1**. If option **1** is **ON**, then the entry in the first location of [009] is a zone definition, if option 1 is OFF, then the entry in the first location is a PGM definition. PGM 2/Zone 34 functionality is enabled in section **[013]** option **2**.

- Section **[009]** is used to program the definition for the hardwired zones (zone 33 and/or 34) or PGMs (PGM 1 and/or 2).
- See section **[013]** to select zone inputs or PGM outputs.
- See sections **[133]** and **[134]** for Zone attribute programming.
- See sections **[501]** and **[502]** for PGM attribute programming.

PGM Types

00 **Null PGM (Not Used)**

01 **Burglary and Fire Bell Follower.** The PGM switches to ground when any bell activity occurs. This PGM type follows:

- Fire pre-alerts
- CO (Carbon Monoxide) alarm signal
- Temporal three fire signal (if enabled)
- All burglary and fire alarms
- Bell cut-off time

This output will **NOT** follow bell squawks. The main bell will still activate for all alarms.

i *The fire bell has precedence over burglary. If a fire alarm occurs when a burglary alarm is active, the fire and burglar output will pulse ("Fire" PGM) with the main bell. This PGM type will follow the bell (pulsed if fire, steady if burglary).*

02-04 For Future Use

05 **System Armed Status.** The PGM switches to ground at the beginning of the exit delay when the system is armed. The output will go high (open) when the system is disarmed.

06 **Ready to Arm.** The PGM switches to ground when the system is ready to arm (all non-force armable zones on the system are restored). When an access code is entered to arm the system and the exit delay begins, the PGM output will be de-activated. This PGM operates as described during walk test mode (if all zones are restored).

07 **Keypad Buzzer Follow.** The PGM output switches to ground when the keypad buzzer is activated by the events described below. The PGM output will remain switched to ground while the keypad buzzer is active.

- 24 hour supervisory buzzer zone alarm
- Entry delay
- Audible exit delay
- No activity arm pre-alert
- Audible exit fault
- Door chime

This PGM type does not activate for local key presses or trouble beeps.

08 **Courtesy Pulse.** This PGM output switches to ground for 2 minutes past the end of entry or exit times to allow enough time for complete entry to or exit from the premises. If the system is armed through the ***No Activity Arming*** method this output will NOT activate.

09 **System Trouble.** This PGM output switches to ground when any of the selected Troubles are detected. The output will de-activate when all of the selected Troubles are restored. The PGM attributes from this output are as follows:

1 Service Required
2 A.C. Failure
3 Telephone Line Fault
4 Communications (Failure to Communicate)
5 Device (Fire) Fault
6 Device Tamper
7 Device Low Battery
8 Loss of Clock

10 **Latched System Event (Strobe).** This PGM output switches to ground when any of the selected system events (alarms) occur on the system. The PGM output will deactivate when an access code is entered to disarm the system. If an alarm activates this output in the disarmed state, it will deactivate if a code is entered during bell time-out or if the system arms after bell time-out.

This output will activate for all silent and audible alarms.

1 Burglary	Delay, Interior Delay, Instant, Interior, Stay/Away, Instant Stay/Away, Night, Day Zone and 24-hr. Burg zones
2 Fire	Key, Fire zone
3 Panic	Key and Panic
4 Medical	Key, Medical and Emergency zones
5 Supervisory	Supervisory, 24-hr. Buzzer, Auxiliary, Freeze, and Water zones
6 Priority	Gas, Heat, 24 Hr CO zones, 24-hr. Non-latching Tamper
7 Duress	Duress alarms
8 Latched	Follows output timer

i *This PGM output activates for alarm conditions only. Pre-alerts or delays do NOT activate the output. When this output follows the output timer, events that have been disabled from activating the output will not restart the timer.*

11 **System Tamper.** This PGM output switches to ground when any Tamper condition occurs on the system. If set for steady operation, this output de-activates when all Tamper conditions on the system are restored. If this output is set for a pulsed output, the PGM output will switch to ground when a Tamper condition occurs and remains on for the duration of the PGM output timer (programmed in section [170]). This will activate for each Tamper condition, even if there is an unrestored Tamper condition on the system.
Tampers include zone tampers (DEOL), PC9155 case tampers, TLM trouble, RF Jam, and all zone and device tampers.

12 **TLM and Alarm.** The output will activate when a Telephone Line Trouble (TLM) trouble condition is present and then an alarm occurs on the system.

13-16 Future Use

17 **Away Armed Status.** This PGM output follows the status of the Stay/Away zones. If the system is armed with the Stay/Away zones always active, then the Away output is active.

18 **Stay Armed Status**. This PGM output follows the status of the Stay/Away zones. If the system is armed with the Stay/Away zones bypassed, then the Stay output is active.

19 **Command Output #1.** Entering the **[✱][7][1]** command activates the PGM type according to how the PGM attributes are configured. Refer to sections **[501]** and **[502]** for attribute information.

20 **Command Output #2.** Entering the **[✱][7][2]** command activates the PGM type according to how the PGM attributes are configured. Refer to sections **[501]** and **[502]** for attribute information.

21-39 For Future Use

40 **Audio Verification Trigger.** This PGM output activates when the conditions are ready for 2-way audio verification. This output is intended to be used with the PC5950 module. Activation of this output will be delayed until the kiss-off of the alarm messages.

[012] Keypad Lockout Options

This section determines how the keypad lockout function operates.

Number of Invalid Codes before Lockout

Program a number from 000 to 255 to determine the number of invalid master, user or installer access code entries to reach keypad lockout. When keypad lockout occurs, the system is rendered inoperative via the keypad for the programmed duration only (wireless keys and keyswitch zones will still be able to function). When any keys are pressed, an error tone sounds. Entering 000 disables keypad lockout.

Lockout Duration

Program a time from 000 to 255 minutes to determine the length of time before lockout resets and the keypad can once again be used.

- If lockout is not reached within the hour roll-over, the number of invalid attempts is reset to 0.
- After a valid access code is entered, the number of invalid attempts is reset to 0.
- Fire, Auxiliary and Panic keys are still active during keypad lockout.
- Key presses will not reset the lockout timer.
- If the lockout timer was active before powering down, the system lockout will be active for the programmed duration on power up.

[013] First System Options

Option	Description
[1]	**ON: Zone 33/PGM 1 Selection:** Hardwired Zone 33 Input is enabled. The I/O-1 terminal functions as an input for Zone 33. The zone definition is programmed in the first entry of section [009]. Zone supervision is determined by attributes 14, 15, and 16 programmed in sections [133]. **OFF: PGM 1 Output Enabled:** The I/O-1 terminal functions as an output. The PGM type is programmed in the first entry of section [009]. PGM attributes are programmed in section [501].
[2]	**ON: Zone 34/PGM 2 Selection:** Hardwired Zone 34 Input is enabled. The I/O-2 terminal functions as an input for Zone 34. The zone definition is programmed in the second entry of section [009]. Zone supervision is determined by attributes 14, 15, and 16 programmed in sections [134]. **OFF: PGM 2 Output Enabled:** The I/O-2 terminal functions as an output. The PGM type is programmed in the second entry of section [009]. PGM attributes are programmed in section [502].
[3]-[5]	For Future Use
[6]	**ON: Audible Exit Fault.** Audible Exit Fault is enabled. If a non force-armable delay 1 or delay 2 type zone is open at the end of the exit delay, the entry delay begins immediately. Also, the bell sounds a steady alarm for the time programmed as entry delay. This feature is intended to immediately alert the user that their system has been armed incorrectly. The Exit Fault Pre-alert is logged to the event buffer if Audible Exit Fault is enabled and if there is an exit error. **OFF: Audible Exit Fault is Disabled.** The bell does not sound and Exit Fault Pre-alert is not logged to the event buffer for an exit error condition.
[7]	**ON: Event Buffer Follows Swinger Shutdown.** When an event reaches the swinger shutdown limit programmed in section [377], it will no longer log to the event buffer until the swinger shutdown is reset. **OFF: Event Buffer Logs Events past Swinger Shutdown.** When an event reaches the swinger shutdown limit programmed in section [377], it will continue to log to the event buffer.
[8]	**ON: Temporal Three Fire Signal.** All fire bells will sound in the temporal three fire signal pattern described in the NFPA standard. The cadence is as follows: **500ms ON, 500ms OFF, 500ms ON, 500ms OFF, 500ms ON, 1.5 s OFF.** *Only zone definitions [87], [88], and [89] (along with the Fire key) will use this signalling if it is enabled. All other zone definitions set to pulse use the standard pulse cadence.* **OFF: Standard Pulsed Fire Signal.** All fire bells will sound with the standard 1 second **ON**/1 second **OFF** fire bell cadence.

[014] Second System Options

Option	Description
[1]	**ON: Arm / Disarm Bell Squawk Enabled.** The bell output sounds a single squawk when armed in any manner, and a double squawk when the system is disarmed. If there are alarms in memory, or an FAP key alarm has occurred, the bell emits a tripple squawk to indicate the alarm memory. **OFF: Arm / Disarm Bell Squawk Disabled.** The bell output does not squawk when the system is armed or disarmed in any manner. *This option does not affect the Bell Squawk attribute for access codes.*
[2]	For Future Use
[3]	**ON: RF Jam Logs After 5 Minutes.** The RF Jam Trouble will not log to the event buffer until the 5 minute delay has elapsed. **OFF: RF Jam Logs After 20 Seconds**. The RF Jam Trouble will log to the event buffer after the initial 20 second delay has elapsed. *The Trouble is displayed on the keypad as soon as it occurs. The panel Trouble LED changes from yellow to orange indicating that the panel is in RF Jam.*
[4]-[5]	For Future Use
[6]	**ON: Audible Exit with Urgency.** The keypad sounds a pulsing tone (once per second) during the exit delay if the panel is armed using an access code, keyswitch zone or away arming function key. The keypad sounds a different tone (3 tones per second) to warn that the exit delay is about to expire during the last 10 seconds of the exit delay. **OFF: Silent Exit Delay.** The keypad does not sound during the exit delay.
[7]	For Future Use
[8]	**ON: Fire Bell is Continuous.** The bell output sounds until an access code is entered to silence the alarm or disarm the system for all fire type alarms. This is independent of the time programmed for bell cut-off in section **[005]**. **OFF: Fire Bell Follows Time-out.** The bell output sounds for the length of the bell Cut-off or until an access code is entered for all fire type alarms.

[015] Third System Options

Option	Description
[1]	**ON: Fire Key Enabled.** Pressing and holding the fire key for 2 seconds generates a fire alarm. The keypad sounds a set of 3 beeps to acknowledge the valid alarm and the buzzer sounds a pulsing alarm tone for the length of the bell time-out, or until an access code is entered. An alarm reporting code (if programmed) is transmitted. **OFF: Fire Key Disabled.** The Fire key does not sound or report an alarm when pressed. *When enabled, this key generates alarms at all times.*

[2] **ON: Panic Key Audible.** When a valid Panic key alarm is generated, the keypad buzzer sounds a series of 3 beeps to acknowledge the alarm. The buzzer then sounds a steady tone for the length of the bell time-out or until an access code is entered.
OFF: Panic Key Silent. When a valid Panic key alarm is generated, the keypad buzzer and the bell output remain silent, but the alarm is still transmitted (if programmed).

[3] **ON: Quick Exit Enabled.** See **[✱][0]** in section 3.3 **[✱]** Commands.
OFF: Quick Exit Disabled.

[4] **ON: Quick Arming Enabled/Function Keys Do Not Require Code. [✱][0]** arming and Stay/Away function keys may be used to arm the system without the entry of a valid access code.
OFF: Quick Arming Disabled/Function Keys Require Code. [✱][0] arming is not permitted, and Stay/Away functions keys require the entry of an access code to arm the system.

This option must be OFF to identify wireless keys for arming.

[5] **ON: Access Code Required to Bypass Zones.** After entering the **[✱][1]** Bypass Zones command, an access code must be entered before zones may be bypassed.
OFF: Access Code Not Required to Bypass Zones. No code is required to enter the **[✱][1]** Bypass Zones command to bypass zones.

[6] **ON: Master Code Not User Changeable.** The Master Code (access code 40) may not be changed by the user with **[✱][5]** access code programming. The Master Code can only be programmed in Installer Programming, section **[007]**.
OFF: Master Code User-Changeable. The Master Code (access code 40) may be programmed by the user using the **[✱][5][Master Code][40]** command. The Master Code may also be programmed in Installer Programming.

[7] **ON: Telephone Line Monitor enabled.** The TLM function is active and the system indicates if a Telephone Line Trouble condition exists when using the **[✱][2]** View Trouble Conditions command.
OFF: Telephone Line Monitor disabled. The TLM function is shut off and telephone line troubles are **NOT** indicated by the system.

[8] **ON: System Tamper enabled.** The panel monitors the physical tamper switch. The switch activates if the system is taken off the wall, or the front cover is removed, generating a System Tamper Alarm. A system tamper causes an audible alarm if the system is armed. If the system is disarmed when a system tamper occurs, the system cannot be armed until the tamper condition is cleared.
OFF: System Tamper disabled. The panel does not monitor the physical tamper switch.

[016] Fourth System Options

Option	Description
[1]	**ON: Cross Zoning Enabled.** The panel uses the Cross Zone attribute for burglary verification. **OFF: Police Code is Enabled.** The panel uses the Police Code feature for burglary verification.
[2]	**ON: Exit Delay Restart Enabled.** If a delay zone (Delay 1 or 2 only) is violated during the exit delay and then restored, it is considered an exit. If a delay zone is violated again it is considered a re-entry. With this option enabled the panel restarts the exit delay. Further violations and restorals of delay zones do not restart the exit delay. **OFF: Exit Delay Restart Disabled.** Delay zone violations and restores do not restart the exit delay.

The exit delay can only be restarted once. This includes restarts from Away function keys. If the exit delay is silent, the additional exit time remains silent and doubles the programmed exit time (required for CP-01).

[3]	**ON: Blank Keypad When Not Used.** If no keys are pressed for 30 seconds, the display and all keypad lights except backlighting (if enabled) turn **OFF** until the next keypress, entry delay, audible alarm, or keypad buzzer condition. **OFF: Keypad Always Active.** The keypad lights remain **ON** at all times.
[4]	**ON: Access Code required to remove Keypad Blanking.** A valid access code must be entered before a blanked keypad can be used. If the bell or entry delay is active, entering an access code unblanks the keypad and disarms the system. **OFF: Access Code Not Required.** Pressing any key on a blanked keypad removes the blanking. If the key is a number, then it is considered the first digit of an access code.
[5]	**ON: Keypad Backlighting is Enabled.** The keypad will have backlighting on all of the time. **OFF: Keypad Backlighting is Disabled.** The keypad will never have backlighting on.
[6]	**ON: Identified WLS keys Not Required for Disarming.** The panel accepts the disarm key code from an unidentified wireless key allowing disarming without a code. **OFF: Identified WLS Keys Required for Disarming.** The panel does **NOT** accept the disarm key code from an unidentified wireless key. An access code must be associated to a wireless key for operation.
[7]	**ON: Bypass Status Displayed While Armed. "*Warning Bypass Active*"** displays if zones are manually bypassed when the system is Away armed. **OFF: Bypass Status Not Displayed While Armed.** Zones that have been manually bypassed are not indicated when the system is Away armed.
[8]	**ON: Daylight Saving Time Enabled.** The panel switches between daylight-saving and standard time according to the programmed time of the year and number of hours in sections [168] and [169]. **OFF: Daylight Saving Time Disabled.** The panel will NOT make time adjustments for daylight-saving time.

Ensure that daylight-saving time programming under sections [168] and [169] does not conflict with the test transmissions programming.

[018] Sixth System Options

Option	Description
[1]	For Future use
[2]	**ON: Keypad Tamper Enabled.** All system keypads will generate tamper troubles and restorals. **OFF: Keypad Tampers are disabled.** System keypads will NOT generate tamper troubles and restorals.
[3]-[4]	For Future use
[5]	**ON: Keypad Buzzer Follows Bell Enabled.** The keypad buzzers follow the bell status. **OFF: Keypad Buzzer Follows Bell Disabled.** The keypad buzzers do **NOT** follow all bell activity. Only designated alarms will activate the keypad buzzer. *DSC recommends the use of a transformer with the system keypad if this feature is enabled.*
[6]-[8]	For Future Use

[023] Tenth System Options Code

Option	Description
[1]	For Future Use
[2]	For Future Use
[3]	**ON: Test Transmission while Armed Only:** The Periodic Test Transmission reporting code is transmitted when the system is armed, depending on which test transmission options are enabled. **OFF: Test Transmission while Armed and Disarmed.** The Periodic Test Transmission reporting code is transmitted when the programmed time occurs regardless of the armed state of the panel. *This feature is intended to operate with the test transmission counter set to hours.*
[4]	**ON: Test Transmission Counter in Hours:** Sets the test transmission counter to hours. **OFF: Test Transmission Counter in Days:** Sets the test transmission counter to days.
[5]	**ON: Switching from Away to Stay Disabled.** The user can not switch from Away mode (highest armed mode) to Stay mode (lower armed mode) with the arming function keys or the **[✱][1]** feature. **OFF: Toggling between Away and Stay is permitted.**
[6]	For Future Use
[7]	**ON: Trouble Beeps are Silent.** Trouble beeps will **NOT** sound a double beep every 10 seconds unless the trouble is caused by a fire trouble. **OFF: Trouble beeps will sound every 10 seconds:** Trouble beeps will sound a double beep every 10 seconds for all troubles.
[8]	**ON: Keyswitch Arms in Away Mode.** Keyswitch zones on the system arm the system in Away mode. **OFF: Keyswitch Arms in Stay or Away.** When a keyswitch zone is used to arm the system, the final armed mode depends on whether the user violates a delay zone during exit delay. If the user violates a delay zone, the system will arm in Away mode. If not, the system will arm in Stay mode. (This is similar to arming the system at the keypad with an access code. The exit delay will be audible.)

[024] Eleventh System Options Code

Option	Description
[1]	**ON: Temperature Display Enabled.** The keypad displays the temperature received from the lowest numbered external siren. If the local clock display is also enabled, then the keypad displays date, time, and temperature. **OFF: Temperature Display Disabled.** The keypad will **NOT** display the temperature.
[2]	ON: Temperature displayed in degrees Celsius. The keypad displays the temperature in Celsius. **OFF: Temperature displayed In Fahrenheit.** The keypad displays the temperature in degrees Fahrenheit.
[3]	**ON: PC9155 Internal Siren Enabled.** The internal siren on the panel is enabled. **OFF: PC9155 Internal Siren Disabled.** The internal siren on the panel is disabled.
[4]	**ON: Inactivity is Monitored by all Zones.** If no violations occur on any burglary zones during the Inactivity Timer windows (section [591]-[592]), the panel communicates the Fail to Report In code, if programmed. *This code is not transmitted for panels that are Away armed.* *Troubles and bypassed zones will not cause activity indications.* **OFF: Inactivity is Monitored only by 24-hour Non-alarm Zones.** If no violations occur on a 24-hour non-alarm zone during the Inactivity Timer windows (section **[591]-[592]**), the panel communicates the Fail to Report In code, if programmed.
[5]-[8]	For Future Use

[030] Zone Loop Response

Option	Description
[1]	**ON: Zone 33 is Fast Loop Response:** Zone 33 has a fast loop response (36 ms). **OFF: Zone 33 is Normal Loop Response:** Zone 33 has a normal loop response (400 ms).
[2]	**ON: Zone 34 is Fast Loop Response:** Zone 34 has fast loop response (36 ms). **OFF: Zone 34 is Normal Loop Response:** Zone 34 has normal loop response (400 ms).
[3]-[8]	For Future Use

[101]-[134] Zone Attributes

The following options can be enabled or disabled for each zone. Pressing [9] in one of these sections brings the installer to the upper bank (attributes 9 to 16). From the upper bank, press [9] to return to the lower bank (attributes 1 to 8).

These attributes override default settings. Do NOT change fire zone attributes from their default settings.

Option		Description
[1]	**Bell Options**	**ON:** An alarm activates the bell output. **OFF:** Silent alarm.

If a zone is set for silent alarm, and 2-way Audio (attribute [9]) is enabled, the audio session will only be Listen-in. This means the central station operator can not speak back through the system to the end user. (This applies to the PC5950 audio verification module only).

[2]	**Bell Type**	**ON:** The bell output is steady when the zone is in alarm. **OFF:** The bell output pulses when the zone is in alarm.
[3]	**Chime**	**ON:** The keypad chimes when the zone is violated and when the zone is secured. **OFF:** The zone does not chime the keypad.
[4]	**Bypass**	**ON:** The zone may be manually bypassed. **OFF:** The zone can not be bypassed.
[5]	**Force Arming**	**ON:** The system can be armed with the zone violated. The zone is temporarily bypassed and, when secured, is monitored by the system. **OFF:** The system cannot be armed if the zone is open.
[6]	**Swinger Shutdown**	**ON:** When the zone goes into alarm for the number of times programmed in the Swinger Shutdown Counter (see section [377]), it shuts down with no further transmissions sent to the monitoring station. The bell follows Swinger Shutdown if programmed. **OFF:** Swinger Shutdown is disabled. All alarms are transmitted and do not follow the Swinger Shutdown Counter.

If a zone is in Swinger Shutdown, and this attribute is disabled, then re-enabled, the zone will no longer be in Swinger Shutdown.

[7]	**Transmission Delay**	**ON:** Reporting of zone alarms are delayed for the programmed time in section [377] after the zone goes into alarm. If a valid access code is entered within this time, no alarm signal is communicated. **OFF:** When an alarm occurs, the reporting code is transmitted immediately.
[8]	**Cross Zone**	**ON:** The zone is enabled for cross zoning. **OFF:** The zone is not enabled for cross zoning.
[9]	**2-way Audio**	Applies to 2-way Audio Verification Module (PC5950) **ON:** The zone initiates a 2-way audio verification session with the central station. **OFF:** The zone does not initiate a 2-way audio session.
[10]-[13]	For Future Use	

Options [14] to [16] are used for zones 33 and 34 exclusively. If more than 1 option is enabled for options 14, 15, and 16 the lowest attribute number will take precedence. If Options 14 and 15 are both enabled the zone follows the NC loop configuration.

[14]	**Normally Closed Loops**	**ON:** The zone follows the Normally Closed (NC) loop configuration. **OFF:** The zone does **NOT** follow NC loop configuration.
[15]	**Single End of Line (SEOL) Resistors**	**ON:** The zone follows the SEOL zone configuration. **OFF:** The zone does **NOT** follow SEOL zone configuration.
[16]	**Double End of Line (DEOL) Resistors**	**ON:** The zone follows the DEOL zone configuration. OFF: The zone does NOT follow DEOL zone configuration.

[167] GPRS/Ethernet Interface Communications Wait for ACK

This value represents the time the communicator waits for an acknowledgement (ACK) from the receiver after sending the SIA packet to the central station.

[168]-[169] Daylight Saving Time

These sections provide support for programming the beginning and the ending of daylight-saving time. In section [168] the month is programmed in the first entry, the week in the second entry, and the day of the month or the day of the week in the third entry. The hour of the day when the panel code shall "spring" forward the system clock with the number of hours is programmed in the last entry of this section. Under section [169] following the order of the entries of section [168] the installer can program the month, week, day of month or day of week and the hour of the day when the system clock shall "fall" back with the number of hours programmed in the last entry of this section.

[1]	**Month**	Valid entries are 01-12 for January to December.
[2]	**Week**	Valid entries are 0-5. Enter '0' to program a specific date and time to set the clock ahead under section [168] or set the clock back under section [169]. Enter 1-5 to program the occurrence in the month in which the programmed 'specific day of the week (Sun-Sat)' will occur to set the clock ahead under section [168] or back under section [169].
[3]	**Day**	If '0' is programmed in the previous section, valid entries are 1-31 for the day of the month. If '1-5' is programmed in the previous section, valid entries are 0-6 (Sun-Sat) for the day of the week.
[4]	**Hour**	Valid entries are 0-23 hours. This is the time of day to advance or set back the clock.
[5]	**Time**	Valid entries are 1 or 2 hours. This is the number of hours to advance or set back the clock.

i *To program the last week of the month, program week 5 under the second entry*
The time cannot be programmed to change at midnight. If daylight-saving occurs at midnight, program the hour for 2:00 AM

[170] PGM Output Timer

This value represents the period of time (in seconds) that a PGM will activate if programmed to follow the PGM timer. Valid entries are 001-255.

i *If a System Event PGM is programmed to follow the Command Output timer, all PGM attributes do not have to be enabled. The System Tamper will also follow this timer.*

[176] Cross Zone/Police Code Timer

This option affects the Cross Zone/Police Code log and transmission as well as the Cross Zone feature. When a zone trip occurs, the Cross Zone timer starts. This timer affects the panel in two different ways depending on the programming of the Burglary Verification options (section [016], Option [1]):
If the Police Code feature is being used, the first zone alarm will immediately transmit. When a second zone alarm occurs within the time period (in minutes) programmed in this section, the panel will log and transmit the Police Code event. If the second zone alarm occurs after this timer expires, the Police Code will not be logged or transmitted, and the timer will be started again.

If the Cross Zone attribute is used, the first zone alarm will not log, transmit or begin an audible alarm sequence. If a second zone is violated within the Cross Zone timer's duration (in seconds), the panel goes into the appropriate alarm sequence and communicates both zone alarms followed by the burglary verified signal.
If 000 is programmed in this section, either:

The Police Code transmits for any two different zone alarms during an armed to armed period.
The Cross Zoning feature will not work. This is not a valid entry for Cross Zoning.

i *The Police Code timer is in minutes. the Cross Zone timer is in seconds.*

[190] No-Activity Arming Pre-Alert Timer

This is the duration which the No-Activity Arming pre-alert sounds when the No-Activity timer expires (see section [191]). The keypad displays ***System Arming in Progress*** for the duration of the pre-alert timer. If programmed as 000, the system arms when the No-Activity timer expires. Valid entries are 000 - 255 minutes.

[191] No-Activity Timer

The system begins its Auto-arm sequence when the No-Activity timer expires. If '000' is programmed in this section, No-Activity Arming is disabled. Valid entries are from 005 - 255 minutes, 000 to disable. The No-Activity timer starts when an Entry/Exit point is violated. The timer will cancel on the next zone violation and only start up again when another Entry/Exit point violation occurs.

i *The valid entries begin at 5 minutes. A PIR that is activated cannot be re-activated for at least another 3 minutes.*

[202]-[206] Zone Assignments

These sections determine if each individual zone is enabled or disabled. If a zone is enabled, it is supervised by the system and operates according to the zone type programmed. If a zone is not assigned to the system, it is not supervised and all activity on the zone is ignored by the panel.

[301] First Telephone Number

The information in this section also applies to sections [302], [303] and [305].
These sections determine which type of communicator is activated in the event of an alarm (telephone, GPRS and Ethernet) and the sequence that the system follows in the event of an unsuccessful communication.

- Entry of **[D]** followed by a **[Telephone Number]** terminated with '**F'** configures the section for telephone dialing.
  E.g.: **[D12223334444F]**
- Entry of **[D]** followed by **[CAA]** terminated with '**F'** allows the system configuration to be determined by the **GPRS/Ethernet** module.
  E.g.: **[DCAAF]**
- Enter **[DCBBF]** to configure the section for **Ethernet Receiver 1**
- Enter **[DCCCF]** to configure the section for **Ethernet Receiver 2**
- Enter **[DCDDF]** to configure the section for **GPRS Receiver 1**
- Enter **[DCEEF]** to configure the section for **GPRS Receiver 2**

Telephone Communications

All telephone number sections are 32 digits in length. Hexadecimal digits may be programmed in the telephone number to perform additional functions as follows:

- Enter [✱][2][✱] – HEX B to dial "✱".
- Enter [✱][3][✱] – HEX C to dial "#".
- Enter [✱][4][✱] – HEX D for an additional dial tone search, as is required for PBX telephone systems.
- Enter [✱][5][✱] – HEX E to insert a 2 second pause in the telephone number.

i *There is an automatic 2-second pause before additional dial tone searches are initiated.*

- HEX A is not used.
- HEX F represents the end of the phone number (everything after F is ignored).
- Pressing [#] in these sections will exit and save the entire phone number.
- The panel will not attempt to communicate, if no phone number is programmed. This applies to phone numbers 1 and 2.

[302] Second Telephone Number

See [301] First Telephone Number for details.

[303] Third Telephone Number

See [301] First Telephone Number for details.

[304] Call Waiting Cancel Dialing String

This is a 6-digit Hex entry that is used to disable call waiting on a call waiting equipped phone line. This is typically ✱70 in most areas. Dialing this string before a phone number will disable call waiting for the duration of the call. If this section is programmed (not FFFFFF), and section [382] option [4] is ON, the panel dials this string in place of the first digit of the phone number (sections [301]-[303]). This only applies to the first attempt that is made to each phone number. If six digits are not required terminate the string with Hex Fs to create a 6-digit string.

[305] Fourth Phone Number

See [301] First Telephone Number for details.

[310] System Account Code

This is the Account code used by the panel when communicating. This Account code can be up to six digits in length for the SIA communications format.

i *Only SIA supports 6-digit account codes. If a 4-digit account code is used, enter FF for the last two digits. When using Contact ID or BPS Formats and the account number has a '0' in it, substitute a HEX digit 'A' for the '0'.*

Reporting Codes

Reporting codes are found within sections [320] through [348]. Each format has its own rules and requirements.

i *The GS2065 and TL265GS modules only support the SIA Reporting Code format.*

[320]-[326] Zone Alarms & Alarm Restores

These reporting codes are used by the communicator to transmit zone alarms and restores for zones 1 to 34.These reporting codes are sent to the Alarm & Restore call direction group

i *Zone alarms will transmit to the System Test Transmission Call Direction when they are being transmitted as part of walk test (enabled if section [382] option [2] is ON).*

[328] Miscellaneous Alarm Reporting Codes

Duress Alarm

This reporting code is transmitted whenever a Duress code is used to perform any function on the system. The reporting code is sent to the Alarm & Restore call direction group.

Opening After Alarm

This reporting code is transmitted when the system is disarmed after an alarm; if an alarm occurred during the previous armed period. The reporting code is sent to the Alarm & Restore call direction group.

Recent Closing

A Recent Closing transmission is transmitted if an alarm occurs within 2 minutes of the exit delay time expiry. The Recent Closing report is transmitted for the first alarm only. The reporting code is sent to the Alarm & Restore call direction group. Also, the Recent Closing event is transmitted, even if the zone alarm has transmission delay enabled.

Cross Zone/Police Code Alarm

When using Cross Zoning (section [016] option [1] ON), this reporting code is sent when two 'crossed' zones go into alarm during the Cross Zone period. When using Police Code (section [016] option [1] OFF), this reporting code is sent when any two zones go into alarm. In both cases, only one reporting code is sent during each armed-to-armed period. The reporting code is sent to the Alarm & Restore call direction group.

Burglary Not Verified

When using Cross Zoning (section [016] option [1] ON), this reporting code is sent if the Cross Zone timer is initiated by the first cross zone alarm, but it is not verified by a second cross zone alarm before the timer expires. This reporting code is sent to the Alarm & Restore call direction group.

Alarm Cancelled

If an alarm event is sent after transmission delay has expired, then a cancel window time will start. Any time during this window if a valid access code is entered then this event is logged and transmitted. When this reporting code/event has been acknowledged by the central station a keypad will ring back. This reporting code is sent to the Alarm & Restore call direction group. See section [377] Communications Cancel Window.

[329] Priority Alarm and Restore Reporting Codes (Fire, Auxiliary, Panic Alarms/Restores and Fail to Report In)

If enabled and used to generate manual alarms, these reporting codes are sent to the Alarm & Restore Call Direction group.

[330]-[336] Zone Tampers & Tamper Restorals

These reporting codes are used by the communicator to transmit zone tampers and restores for zones 1 to 34.These reporting codes are sent to the Tamper Alarm & Tamper Restore call direction group of the system.

[338] Miscellaneous Tamper Reporting Codes

System Tamper & Restore

These reporting codes are sent to the system Tamper Alarm & Tamper Restore call direction group when a panel tamper occurs.

Keypad Lockout

Whenever the system enters keypad lockout, this reporting code is sent to the system Tamper Alarm & Tamper Restore call direction group.

[339] Closing/Reporting Codes (Closing by Users 1-16)

When the system is armed, a closing reporting code is transmitted for the user code used to arm the system after the exit delay expires. These reporting codes are sent to the Opening & Closing call direction group of the system. In addition, either "Armed in Stay Mode" or "Armed in Away Mode" is logged to the event buffer.

Closing by Users (Duress)

When the system is armed by an access code programmed as duress, the corresponding closing reporting code is transmitted. This reporting code is sent to the Opening & Closing call direction group.

[341] Miscellaneous Closing (Arming) Reporting Codes

Closing By Access Code 40

See [339] Closing by Users 1-16

Automatic Zone Bypassing

This stops transmission of zone bypass information for systems set up for an automatic communication format (SIA and Contact ID). Enter [00] to disable the automatic zone bypassing communications. If the zones are to be identified, they are transmitted with the Partial Closing to the Opening & Closing call direction group. (24 Hour zone types will transmit that they have been bypassed when the user exits the bypassing menu).

Partial Closing

If zones were manually bypassed at the time of arming, this reporting code is transmitted to the central station with the Closing code to warn of a security compromise. Automatic bypasses caused by Stay arming will not cause this code to be transmitted. Zones force armed by automatic arming will transmit in the manner described above. If SIA is used, each zone will be identified using the UB-XX (un-typed bypass) identifier. The identified zones will follow the partial closing code and precede the closing transmission. This reporting code is sent to the Opening & Closing call direction group.

Special Closing

If the system is armed without an access code using Keyswitch Zone, Downloading, Quick Arm [✱][0], or Stay or Away function keys this reporting code is transmitted. In addition, either "Armed in Stay Mode" or "Armed in Away Mode" is logged to the event buffer for all closing types. This reporting code is sent to the Opening & Closing call direction group.

Exit Fault

If an Exit Error occurs and entry delay expires before the system is disarmed, this reporting code is sent. This reporting code is sent to the Openings & Closings call direction group

> *If the delay zone that caused the exit error has cross zoning enabled, the exit fault and zone alarm will still transmit if a second zone is not violated. This is to inform the central station that the premise is not secure. The local alarm sequence follows the cross zoning rules. The exit error is transmitted with the zone alarm that caused the fault, even if that zone has a transmission delay enabled.*

[342] Opening (Disarming) Reporting Codes (Users 1-16)

When the system is disarmed, an opening Reporting code for the corresponding user is transmitted.
These reporting codes are sent to the Opening & Closing call direction group.

Opening by Users (Duress)

An opening by an access code programmed as duress results in a transmission of the corresponding opening reporting code. These reporting codes are sent to the Opening & Closing call direction group.

[344] Miscellaneous Opening (Disarming) Reporting Codes

Opening By Access Code 40

See [342] Opening (Disarming) by Users 1-16.

Special Opening

If the system is disarmed (opened) by using keyswitch zone, an unidentified wireless key, or downloading, this reporting code is transmitted to the Opening & Closing call direction group.

[345]-[346] Maintenance Alarm Reporting Codes

Battery Trouble & Restore

If the standby battery is low or disconnected, this trouble is reported. These reporting codes are sent to the System Maintenance call direction group.

AC Failure & Restore

If the AC supply has failed or has been restored, these reporting codes are sent. A programmable delay (001-255 minutes, section [377]) applies to both the trouble and the restore. These reporting codes are sent to the System Maintenance call direction group.

Fire Trouble & Restore

An open circuit or any Low Sensitivity, Tamper or Fault report from a wireless smoke detector, causes this trouble to be reported. These reporting codes are sent to the System Maintenance call direction group.

Auxiliary Power Supply Trouble & Restore

If an auxiliary voltage supply trouble occurs (the Aux PTC has caused the auxiliary supply to stop outputting power), this trouble is reported. These reporting codes are sent to the System Maintenance call direction group.

> *When the Aux Positive Temperature Co-efficient (electronic fuse) enters the open state due to a short or high current draw, if the short is removed and a load is still applied, the Aux+ output will not recover. It must be powered down and back up again to restore this condition.*

TLM Restore

The TLM Restore code is sent when the telephone trouble condition is restored. This reporting code is sent to the System Maintenance call direction group.

General System Trouble & Restore

These reporting codes are transmitted via System Maintenance call direction group to report RF Jam troubles or hardware fault troubles that occur on the system.

General System Supervisory Trouble

This trouble is created by a TLGS alternate communicator fault.

[347] Miscellaneous Maintenance Reporting Codes

Failure to Communicate (Phone Numbers 1, 2, 3 & 4)

When events fail to communicate to either telephone number, this reporting code is transmitted the next time a communication is successful. The information is transmitted in the following order:

- Old Event(s)
- Failure To Communicate (Phone #1)
- New Event(s)

The FTC reporting code does not follow any call direction “group”. It is sent to every group’s call directions upon transmission of ‘failed to communicate’ events. When event(s) fail to communicate to a telephone number, there is no attempt to communicate again until another event is sent to that phone number.

DLS Lead In and Lead Out

When call-back is enabled, the control panel transmits the DLS Lead In reporting code before calling back the downloading computer.The DLS Lead Out reporting code is transmitted by the panel every time DLS has completed a successful DLS session with the control panel. The DLS Lead In reporting code is transmitted in two ways: after the panel has been successfully called by DLS, but before the panel calls DLS back via the downloading telephone number when call-back is enabled, or upon a user-initiated call-up. These reporting codes are sent to the System Maintenance call direction group.

> *If DLS is terminated by an alarm, the PC9155 will not communicate the DLS lead out event.*

General Zone Fault & Restore

This reporting code is sent whenever a zone has entered the fault state. This occurs when there is a short on DEOL hardwired zones and/or a loss of supervisory on a wireless zone. These reporting codes are sent to the System Maintenance call direction group.

Delinquency

The Delinquency Reporting code is transmitted in one of two ways. If section [380] option [8] is OFF, it is transmitted when the system has not been armed for the number of days programmed in section [377]. If section [380] option [8] is ON, it is transmitted when no zone activity has been detected on the system for the number of hours programmed in section [377]. This reporting code is sent to the System Maintenance call direction group

> **i** *The Activity Delinquency timer is active when the system is armed in Stay mode, and not active in Away mode or Night mode arming.*

General Zone Low Battery Alarm and Restore Codes

The following reporting codes are sent to report a Zone Low Battery condition on wireless zones. Individual zones are logged to the event buffer. SIA and Contact I.D. formats identify the zone with the low battery condition. A zone low battery trouble is displayed immediately. Transmission may be delayed (section [377]). These reporting codes are transmitted to the System Maintenance call direction group.

Installer Lead In and Lead Out

The Installer Lead In and Lead Out reporting codes are sent when the panel enters and exits Installer's mode respectively. When exiting Installer Programming automatically after initiating PC-Link via section [499], the Installer Lead Out event does not communicate until after the DLS session is complete. These reporting codes are sent to the System Maintenance call direction group.

General System Supervisory and Restore

These reporting codes are transmitted via the System Maintenance call direction group when an enrolled TLXXX module has been detected as absent or restored.

[348] Test Transmission Reporting Codes

Walk Test Begin/End

These reporting codes are sent when the walk test is initiated and terminated. These codes precede and terminate the alarm reporting codes for the zones that are activated during the walk test period, if the alarms are to be transmitted (section [382] option [2]). The walk test reporting codes are sent to the System Test Transmission call direction group.

Periodic Test Transmission

When the programmed interval and time of day have elapsed, this reporting code is transmitted. This reporting code is sent to the System Test Transmission call direction group.

System Test

When the [✱][6][Master Code][4] command is used to perform a manual system test, this reporting code is sent to test the communicator. This reporting code is sent to the System Test Transmission call direction group.

[350] Communicator Format Options

This section requires four 2-digit entries (1 per phone number). See Appendix B: Communicator Format Options.

> **i** *If phone numbers are programmed for use with the TL265GS/GS2065 modules the programmed format must be SIA.*

[351]-[376] Communicator Call Directions

Communicator call directions can be configured for 4 different phone numbers. Each reporting code falls under one of the following 5 groups:

- Alarms & Restores
- Openings & Closings
- Tampers & Restores (including System Tampers)
- System Maintenance Alarms & Restores
- System Test Transmissions

Each group can be assigned to the following call directions:

Option 1:	1st Telephone Number
Option 2:	2nd Telephone Number
Option 3:	3rd Telephone Number
Option 4:	4th Telephone Number

[377] Communication Variables

Swinger Shutdown (Alarms & Restores)

This value determines the number of transmission attempts (alarm and restore pairs) per zone that the communicator makes before it shuts down for that zone ("Swinger Shutdown"). Program a 3-digit number from 000 to 014. When programmed as 000, the communicator Does **NOT** shutdown and all alarms are transmitted. The bell and event buffer can follow Swinger Shutdown if they are enabled.

Swinger Shutdown (Tampers & Restores)

This value determines the number of times the same system Tamper type event occurs before stopping transmissions. Program a 3-digit number from 000 to 014. When programmed as 000, the communicator does **NOT** shut down and all tampers are transmitted. This Swinger Shutdown affects zone and system tampers.

Swinger Shutdown (Maintenance Troubles & Restores)

This value determines the number of times the same system Maintenance (Trouble) type event will occur before stopping transmissions. Fire Troubles follow the Maintenance Swinger Shutdown variable. Program a 3-digit number from 000 to 014. When programmed with 000, Swinger Shutdown is disabled and all maintenance troubles are transmitted.

Communication Delay (seconds)

This value determines the delay before an alarm transmission for zones which have the Transmission Delay attribute enabled. Valid entries are from 000 to 255 seconds.

> *The delay must be within the range (015-045) for CP-01 installations.*

AC Failure Communication Delay (in minutes or hours)

This value determines the delay before an AC failure or AC restore is transmitted. The AC failure or restore is still displayed immediately and logged to the buffer. Valid entries for this section are from 000 to 255 minutes or hours, depending on section [382] option [6].

TLM Trouble Delay

This value determines the number of valid checks (3-second interval) required before a telephone line trouble is transmitted. Valid entries are 000-255 for a trouble annunciation of 3 to 765 Seconds (12 minutes and 45 seconds). This also applies to the trouble restore delay.

Test Transmission Cycle

This value determines the period between test transmissions for the land line. Valid entries are [001]-[255]. [000] disables the test transmission. This interval is in hours or days depending on the programming of section [023] option [4].

Wireless Device/Module Low Battery Transmission Delay (in days)

When a wireless device reports a low battery condition, the trouble condition is indicated immediately on the keypad. Transmission of this trouble condition to the monitoring station and logging it to the event buffer is delayed by the number of days programmed in this section. If the user does not correct the low battery condition before the delay expires, the low battery condition is transmitted and logged. The Low Battery Restore transmission is not delayed. The device low battery conditions is logged at midnight when the timer expires.

> *Proximity Tag low battery conditions can only be cleared from the trouble menu by deleting the tag from the system.*

Delinquency Transmission Delay

The value in this section determines the period of time that the delinquency event is postponed until it is logged to the event buffer and transmitted. This value is in hours or days depending on whether the delinquency event is for Activity (hours) or Closing (days) as specified in section [380] option [8]. Valid entries are [001]-[255]. [000] disables the delinquency transmission.

Communications Cancel Window (CP-01 Only)

After TX Delay expires and a zone alarm has been transmitted, the Cancel window begins. If an access code is entered during this window, a Communications Cancel reporting code is communicated and logged to the event buffer. If the Communications Cancel Window expires without an access code entered or a code is entered after the window, no log or communication occurs.

[378] Test Transmission Time of Day

Enter a 4-digit time using the 24 hour clock format (HH:MM) to set the test transmission time of day. Valid entries are from 00 to 23 for the hours (HH) and 00 to 59 for the minutes (MM). To disable the test transmission time of day enter [9999] in this section.

> *The time programmed here must NOT be the same as the time programmed for Daylight Saving.*

[380] First Communicator Options

Option	Description
[1]	**ON: Communicator Enabled.** The communicator is enabled and all events programmed to report will transmit. Refer to the Telephone Number, Reporting Code and Call Direction programming sections. **OFF: Communicator Disabled.** The communicator is disabled and events will not be transmitted to the monitoring station. *Downloading may still be performed with communicator disabled.*
[2]	**ON: Restore Transmissions on Bell Time-out.** Zone restoral reporting codes are not transmitted until the zone has been restored and the bell cut-off time has expired. If the zone is not restored when the bell cut-off time expires, the restore is transmitted when the zone physically restores or when the system is disarmed. **OFF: Restore Transmissions Follow Zones.** Zone restoral reporting codes are transmitted when the zone is physically restored. If the zones are still open when the system is disarmed, the restore codes are transmitted when the system is disarmed. *24 Hour zones will not restore until the zone is physically restored regardless of how this option is configured.*
[3]	**ON: Pulse Dialing**. The system dials telephone numbers using pulse (rotary) dialing. **OFF: DTMF Dialing**. The system dials telephone numbers using touch tone (DTMF) dialing.
[4]-[5]	For Future Use
[6]	**ON: Alternating Backup Dialing Enabled.** The communicator switches to the next backup number in the sequence after each failed dialing attempt. This continues until communications are successful or the sequence has been repeated 5 times. **OFF: Call Primary Number, Backup to secondary numbers.** If 5 attempts to communicate to the primary telephone number fail, the communicator switches to the next backup and makes up to 5 more attempts. If communications failure continues the communicator will attempt the second and third backup numbers if designated.

If all 5 attempts to the designated phone numbers fail, an FTC trouble for the primary phone number is initiated and logged to the event buffer regardless of how this option is configured.

[7] For Future Use

[8] **ON: Delinquency Follows Zone Activity (Activity Delinquency).** If there is no zone activity, the Delinquency Transmission Delay timer in section [377] begins counting in ***hours***. When the counter reaches the programmed time, the panel transmits the Delinquency Code, if programmed. If zone activity is present on the system at any time, the counter is reset. If this option is used, the Closing Delinquency option is not available.

This code is not transmitted for panels that are "Away" armed.
Activity on bypassed zones do not affect this timer.
This timer is reset when armed.

OFF: Delinquency Follows Arming (Closing Delinquency). This reporting code is sent whenever the programmed number of days for delinquency has expired without the panel being armed. The timer for this feature is programmed in section [377]. The value programmed in this section determines the number of days the panel counts when not being armed before sending the delinquency reporting code to the central station. Once this code is sent, the timer is not started again until the panel has been armed. This feature is disabled by programming 000 in section [377].

[381] Second Communicator Options Code

Option **Description**

[1] **ON: Opening After Alarm Keypad Ring-back Enabled.** When the Opening After Alarm reporting code is successfully transmitted, the keypad sounds a series of 8 beeps to confirm that the Opening After Alarm code was sent and received. This ring-back occurs for each Opening After Alarm code successfully reported.
OFF: Opening After Alarm Keypad Ring-back Disabled. The keypad does not ring back when an opening after alarm is successfully transmitted.

[2] For Future Use

[3] **ON: SIA Sends Programmed Rep. Codes.** When this option is ON and there is a valid reporting code programmed in the reporting code section, the programmed reporting code is transmitted.

If FF or 00 is programmed as a reporting code, the event is not communicated.

OFF: SIA Sends Automatic Rep. Codes. When this option is OFF the panel will transmit SIA automatic reporting codes. If the reporting code is programmed as 01-FE or FF the associated automatic reporting codes are transmitted. This option is used when a different reporting code is required (i.e., Residential Dial, etc). If 00 is programmed, reporting for the event is disabled. Refer to Appendix A: Reporting Code Formats.

Reporting Code Entry	Option ON	Option OFF
00	No Transmission	No Transmission
FF	No Transmission	Auto Rep Code sent
01-FE	01-FE sent	Auto Rep Code sent

[4] **ON: Closing Confirmation Enabled.** When a Closing reporting code is successfully transmitted, the keypad sounds a series of 8 beeps to confirm that the Closing code was sent and received.
OFF: Closing Confirmation Disabled. No keypad ring-back occurs when a Closing reporting code is successfully transmitted.

[5] [6] For Future Use

[7] **ON: Contact I.D. Uses Programmed Reporting Codes.** The Contact I.D. communications format uses programmed reporting codes when transmitting to the central station.
OFF: Contact I.D. Uses Automatic Reporting Codes. The Contact I.D. communications format uses the automatic reporting codes as shown in Appendix A when transmitting to the central station.

[8] For Future Use

[382] Third Communicator Options Code

Option **Description**

[1] For Future Use

[2] **ON: Zone Alarms Communicate during Walk Test Enabled.** Zone alarms that occur during the walk test will communicate if programmed to do so.
OFF: Zone Alarms Communicate during Walk Test Disabled. Zone alarms that occur during the walk test will not communicate even if programmed to do so.

[3] **ON: Communications Cancelled Message Enabled.** The "Communications Cancelled" message is displayed if alarms are acknowledged during the Transmission Delay time. This message is displayed for 5 seconds.
OFF: Communications Cancelled Message Disabled. The "Communications Cancelled" message is not displayed.

[4] **ON: Call Waiting Cancel Enabled.** The call waiting dialing string programmed in section [304] is dialed before the first attempt of each phone number. All subsequent dialing attempts to the same phone number will not use the call waiting cancel dialing string.
OFF: Call Waiting Cancel Disabled. The call waiting dialing string will not be dialed.

[5] **ON: GPRS/Ethernet Module Enabled.** PC-link support for DLS is disabled when this feature is ON. GPRS/Ethernet Module commands in accordance with the current revision of the T-link Protocol are enabled for GS module support.
OFF: GPRS/Ethernet Module Disabled. PC-Link support for DLS is enabled when this feature is OFF. This includes auto-detect PC-Link. The GPRS/Ethernet commands are also disabled.

[6] **ON: AC Failure Communication Delay in Hours.** The System AC Failure Communication Delay in section [377] is programmed in hours.
OFF: AC Failure Communication Delay in Minutes. The System AC Failure Communication Delay in section [377] is programmed in minutes.

[7] **ON: Number of Dialing Attempts for Residential Dial Communication Format.** Number of dialing attempts is 1 when using the Residential Dial Communication format.
OFF: **Number of Dialing Attempts for Residential Dial Communication Format.** Residential Dial follows the Dialing Attempt counter.

[8] For Future Use

[383] Fourth Communicator Options Code

Option	Description
[1]	For Future Use
[2]	**ON: Phone number 2 Back-Up for Phone number 1 Enabled.** Phone number 2 will back-up for phone number 1 if phone number 1 fails to communicate (FTC). Phone number 2 communicates in the same format as phone number 1. **OFF: Phone number 2 Back-Up for Phone number 1 Disabled.** Phone number 2 does NOT back up phone number 1. Events are communicated to phone number 2 (if enabled in Communicator Call Direction, section [351]-[376]), using the communicator format programmed in section [350].
[3]	**ON: Phone number 3 Back-Up for Phone number 2 Enabled.** Phone number 3 will back-up for phone number 2 if phone number 2 fails to communicate (FTC). Phone number 3 communicates in the same format as phone number 2. **OFF: Phone number 3 Back-Up for Phone number 2 Disabled.** Phone number 3 does NOT back up phone number 2. Events are communicated to phone number 3 (if enabled in Communicator Call Direction, section [351]-[376]), using the communicator format programmed in section [350].
[4]	**ON: Phone number 4 Back-Up for Phone number 3 Enabled.** Phone number 4 will back-up for phone number 3 if phone number 3 fails to communicate (FTC). Phone number 4 communicates in the same format as phone number 3**.** **OFF: Phone number 4 Back-Up for Phone number 3 Disabled.** Phone number 4 does NOT back up phone number 3. Events are communicated to phone number 4 (if enabled in Communicator Call Direction, section [351]-[376]), using the communicator format programmed in section [350].
[5]	**ON: Communications Enabled for FTC Events.** The panel transmits Failure to Communicate (FTC) events if the digital communicator is unsuccessful in communicating with any of the programmed telephone numbers. The FTC trouble/restore reporting code is transmitted via the corresponding event call direction. **OFF: Communications Disabled for FTC Events.** FTC events will not be transmitted. FTC trouble/restore reporting codes are transmitted via the Maintenance call direction group after the next successful transmission.
[6]	**ON: Account Code Error Checking Enabled.** This option is to ensure that a new account code is programmed. Upon attempting to exit Installer Programming, the panel checks if a phone number is programmed in section [301]. If a phone number is programmed, the panel checks if the format is residential dial in section [350]. If the format is residential dial, the check process is aborted. If the format is anything but residential dial, the panel checks if the system account code has been changed from the default (FFFFFF). If the account code has not been programmed when the installer attempts to exit Installer Programming: • The system turns on the trouble LED and sounds an error tone for 10 seconds. • The prompt "Account Code Not Programmed[✱]" is displayed on the keypad. • If [✱] is pressed or the 10 second error tone expires, the system remains in Installer Programming until the account code is changed from the default value of FFFFFF. If the account code has been programmed, the panel operates normally. **OFF: Account Code Error Checking Disabled.** Upon exiting installer's mode, the panel does not check the account code.
[7]-[8]	For Future Use

[389] GPRS/Ethernet Fault Check Timer

The programmed number of poll commands that must be sent without valid poll responses before the panel generates a trouble condition. The number of valid checks happen at 3-second intervals. After the time-out an Ethernet or GPRS fault trouble is generated. Valid entries are 000-255 for trouble annunciation and transmission. The trouble restore is delayed in the same manner as well.

[401] First Downloading Option Code

Option	Description
[1]	**ON: Downloading Answer Enabled.** The system answers calls for downloading if a successful double call routine is detected. Have the downloading computer call the system and let the telephone line ring once or twice. After 1 or 2 rings, hang up. If called back within the time programmed in section [405] Double Call Timer, the panel will answer on the first ring. **OFF: Downloading Answer Disabled.** The system does not answer incoming calls using the double call routine unless the DLS window is enabled. ℹ *This feature also controls the DLS window for GPRS/Ethernet module.*
[2]	**ON: User Can Enable DLS Window.** The user can enter [✱][6][Master Code][5] to enable a 6-hour window for the panel to answer calls for downloading, if a successful double call routine is detected. If this option is enabled, the window is open on power up. **OFF: User Can Not Enable DLS Window.** The user cannot enable a window for DLS calls. ℹ *Options 1 and 2 are not related. One does not need to be enabled for the other to perform its function.*
[3]	**ON: Call-Back Enabled.** When the system answers the downloading computer's call, the computer and the panel hang up. The panel then calls the downloading telephone number and connects with the computer. If more than one downloading computer is used disable this function. ℹ *If no phone number is programmed in section [402], the panel will terminate the DLS session and will not call back.*

OFF: Call-Back Disabled. The downloading computer has immediate access to the panel if it is identified as a valid downloading computer.

[4] **ON: User Call-Up Enabled.** When this feature is enabled, the user may initiate a single call attempt to the downloading telephone number by entering [✱][6][Master Code][6].
OFF: User Call-Up Disabled. An error tone is generated when [✱][6][Master Code][6] is entered.

[5] For Future Use

[6] **ON: 300 Baud Panel Call-Up.** The panel connects and sends the initial header at 300 baud when the user initiates a DLS connection.
OFF: 110 Baud Panel Call-Up. The panel connects and sends the initial header at 110 baud when the user initiates a DLS connection. The panel will then switch to 300 baud in order to receive the response from the DLS computer.

[7]-[8] For Future Use

[402] Downloading Computer's Telephone Number

This phone number enables the control panel to call the downloading computer for DLS call back or user initiated call up.
This telephone number is 32 digits in length (see section [301] for phone number programming details).

[403] Downloading Access Code

This 6-digit Hexadecimal code allows the panel to confirm that it is communicating with a valid downloading computer.

- The default for the PC9155 is **915500**.

The DLS operator is allowed three attempts to connect using the correct downloading access code after connecting to the DLS computer. After three attempts have been made, the DLS will disconnect and a new communications attempt must be made. Three more attempts to program the control panel's DLS access code can be made. If GPRS/Ethernet paths are being used for the DLS connection, after three invalid DLS access codes the panel will ***Lock Out DLS*** for one hour. This is to deter multiple attempts to determine the DLS access code.

[404] Panel Identification Code

This 6-digit hexadecimal code allows the downloading computer to confirm the identity of the control panel during user initiated call-up and call-back.

- The default for the PC9155 is **915500**.

[405] Double-Call Timer

This timer sets the amount of time that can be taken between calls when using double call to contact the panel. Valid entries are 001 to 255 (seconds).

[406] Number of Rings to Answer On

The value in this section determines how many rings the panel will automatically pick up on in order to establish a DLS connection. The default value is 000 rings. Valid entries are [000]-[020].

> **i** *If both section [401] option [1] and section [406] are enabled, either one will work depending on how the installer calls the premises.*

[499] Initiate PC-LINK Communications

A PC-LINK DLS session between a computer and control panel can be initiated by entering this section as described below:

[499][Installers Code][499].

The PC-Link cable must be properly connected between the panels header and the downloading computer and the DLS file must be waiting for the panel to connect before entering this command.
PC-Link and Communication tasks are separate. The PC9155 performs land line communications without affecting PC-link communications to DLS. The panel can **NOT** perform GPRS/Ethernet communications at the same time as land line communications.

[501]-[502] Programmable Output Attributes

The following attributes can be enabled or disabled for each PGM output. When a PGM option is changed, the corresponding PGM attributes are defaulted.

Option **Description**

The following attributes are available for PGM Output Types [01], [05]-[08] and [17]-[18]

[1]-[2] For Future Use

[3] Output Level
ON: Output activates (switch to Ground) when the event occurs.
OFF: Output de-activates (switch to open) when the event occurs.

[4] Output Options
ON: Output Pulsed. When using [✱][7], the output activates for the duration programmed in the PGM output timer, section [170].
OFF: Output On/Off. The output toggles between on and off when the corresponding [✱][7] command is entered.

The following attribute is available only for PGM Output Types [11] and [19]-[20].

[5] Access Code Options
On: Access code required for activation.
Off: No access code required for activation.

The following attributes are available for the System Trouble PGM option [09]

System Trouble PGM (Type 09)
[1] Service Required
[2] A.C. Failure
[3] Telephone Line Fault
[4] Communications (Failure to Communicate)
[5] Device (Fire) Fault / WLS Zone Supervisory Fault Enabled
[6] Device Tamper
[7] Device Low Battery
[8] Loss of Clock

The following attributes are available for the System Event PGM option [10]

System Event PGM (Type 10)

[1]	Burglary	Delay, Instant, Interior, Stay/Away, Night, and 24 Hour Burglary Zone Types
[2]	Fire	Key, Fire zone
[3]	Panic	Key and Panic zones
[4]	Medical	Key, Medical, and Emergency zones
[5]	Supervisory	Supervisory, Auxiliary, Freeze, and Water zones
[6]	Priority	Gas, CO, and 24 Hr Latching Tamper zones
[7]	Duress	Duress alarms
[8]	Output Options	**ON**: Output Follows PGM Timer (Attribute 8). The output activates for the duration programmed for the PGM output timer (section [170]) **OFF** = Output is Latched. The output is active until a valid access code is entered.

If a system event PGM is programmed to follow the command output timer (Attribute 8 On), all other PGM attributes must be enabled.

[591]-[592] Inactivity Timers

Inactivity timers are used to create two windows to monitor 24-hr. non-alarm zone activity. They are [591] Inactivity Timer 1 Start, Inactivity Timer 1 End, [592] Inactivity Timer 2 Start, and Inactivity Timer 2 End. Enter two 4-digit decimal numbers in these two sections. Valid entries for each 4-digit decimal entry are 0000 to 2359. Enter 9999 to disable. The Failed to Arm reporting code will follow the alarms and restorals call directions.

[600] 2-way Audio Control Options

Option	Description
[1]	**ON: Tampers Enabled.** The Talk/Listen-in session initiates for tamper conditions **OFF: Tampers Disabled.** 2-way Audio is disabled for tamper conditions
[2]	**ON: Openings and Closings Enabled**. The Talk/Listen-in session initiates for Openings & Closings events **OFF: Openings and Closings Disabled.** 2-way Audio is disable for Openings & Closings events
[3]	**ON: [A] Key Alarm Enabled.** The Talk/Listen-in session initiates for [A] Key Alarm **OFF: [A] Key Alarm Disabled.** 2-way Audio is disabled for [A] Key Alarm
[4]	**ON: [P] Key Alarm Enabled.** The Talk/Listen in session initates for [P] Key Alarm **OFF: [P] Key Alarm Disabled.** The Talk/Listen in session is disabled for [P] Key Alarm
[5]	**ON: Duress Alarm Enabled (Listen).** The Listen-in session initiates for Duress Alarm **OFF: Duress Alarm Disabled.** 2-Way Audio is disabled for Duress Alarm
[6]	**ON: Opening after Alarm Enabled.** The Talk/Listen-in session initiates for Opening After Alarm **OFF: Opening after Alarm Disabled.** 2-Way Audio is disabled for Opening After Alarm
[7]	**ON: Siren Active during 2-way Audio.** The sounder will remain active during a 2-way Audio session when an audible alarm is present **OFF: Siren Silent during 2-way Audio.** The sounder is silent when a 2-way audio session begins and when an audible alarm is present, allowing the user to hear the operator. The sounder resumes operation for the timeout duration if the panel has not been disarmed at the end of the 2-way session.
[8]	**For Future Use**

[609] Module Tamper Reporting Codes

This section is used for programming keypad/siren tamper reporting codes. A value of 00 can be entered to disable individual reporting codes.

[610] Alternate Communicator Receiver Trouble Reporting Codes

This section is used for programming alternate communicator receiver trouble reporting codes. A value of 00 can be entered to disable individual reporting codes.

[700] Automatic Clock Adjust

The value entered here adds or subtracts seconds at the end of each day to compensate for inaccuracies in the system time. Valid entries are 00-99 with 60 seconds being the default. Monitor the time lost by the panel over a period of time to determine the average value required for this section.
Example: Panel loses an average of 9 seconds a day. Instead of loading 60 seconds for the last minute of each day, program the panel to load 51 seconds with the use of section [700]. This will speed up the panel by 9 seconds everyday, thereby fixing the problem.

[701] First International Options Code

Option	Description
[1]	**ON: 50 Hz AC.** The incoming AC power cycles at 50 Hz. **OFF: 60 Hz AC.** The incoming AC power cycles at 60 Hz.
[2]	**ON: The time base is the internal crystal oscillator.** The internal crystal is used for the time base instead of AC power. **OFF: The time base is the AC power input.** The 50 or 60 Hz AC power is used for the time base.
[3]	**ON: AC/DC Arming Inhibit with Battery Check Enabled.** When an AC or battery trouble is present, the system will not arm. This includes keypad, keyswitch, No Activity Arming and downloading arming. **OFF: Arming not Inhibited.** The system can be armed, with an AC trouble or Battery trouble present. System battery is not checked upon arming.
[4]	**ON: System Tampers Require Installer Reset and Inhibit Arming.** If any system tamper condition occurs, the Installer code must be entered ([✱][8][Installer Code]) and the tamper condition must be restored before the system can be armed. This also includes no-activity arming and keyswitch. **OFF: System Tampers Do Not Require Installer Reset**. If any system tamper condition occurs, installer reset is not required.
[5]	**ON: 6-digit Access Codes.** All access codes on the system must be 6 digits in length. If this option is selected, 2 digits are added to the end of each code, the first 4 digits of the existing codes will remain programmed. System Master Code = XXXX56 Installer Code = YYYY55 Access Codes 1-16 = ZZZZ00 **OFF: 4-digit Access Codes.** All access codes on the system are 4 digits in length except the Panel I.D. code and the Downloading Access code, which are always 6 digits. For any existing codes, the last 2 digits are removed.
[6]	**ON: Busy Tone Detection Enabled.** If a busy tone is detected, the panel will hang-up and attempt to communicate following the "Delay Between Dialing Attempts". **OFF: Busy Tone Detection Disabled.** The communicator will use the standard dialing procedure for every communication attempt regardless of a busy line.
[7]-[8]	**For Future Use**

[702] Second International Options Code

Option	Description
[1]	**ON: Pulse Dialing Make/Break Ratio is 33/67.** This ratio is used for Europe. **OFF: Pulse Dialing Make/Break Ratio is 40/60.** This ratio is used in North America.
[2]	**ON: Force Dialing Enabled.** If the first communication attempt made by the panel fails, on every subsequent attempt the panel will dial regardless of the presence of a dial tone. **i** *The panel will go off-hook, search for a dial tone for 5 seconds, hang-up for 20 seconds, go off-hook, search for dial tone for 5 seconds, and then dial (assuming no presence of dial tone).* **OFF: Force Dialing Disabled.** The panel does not dial the programmed telephone number if the dial tone is not present.
[3]	For Future Use
[4]	**ON: 1600 Hz Handshake.** The communicator responds to a 1600 Hz handshake for pulse formats. **OFF: Standard Handshake.** The communicator responds to the handshake designated by the pulse format selected (1400 or 2300Hz).
[5]	**ON: I.D. Tone Enabled.** After the telephone number is dialed, the panel emits a tone (as specified by option 6) for 500ms every two seconds to indicate that it is a digital equipment call, not voice. OFF: I.D. Tone Disabled. The panel does not emit a tone.
[6]	**ON**: **2100 Hz I.D. Tone.** A 2100Hz ID tone is used for option [5] above. OFF: 1300 Hz I.D. Tone. A 1300Hz ID tone is used for option [5] above.
[7]-[8]	For Future Use

[703] Delay Between Dialing Attempts

For standard (force) dialing, the panel will go off-hook, search for a dial tone for 5 seconds, and hang up for 20 seconds. This programmable timer adds a delay before the next call is attempted, and is defaulted to 003 to make a total of 8 seconds before the panel makes the next dialing attempt.

i *If this value is 00 or FF, the default will be 8 seconds (3 programmable, plus the 5 second delay), otherwise it uses the programmed value.*

[800] Door Chime Options for Zones 1-34

Keypads and indoor sirens can annunciate one of four different door chime tones for each zone on the system.
Each section contains the following chime options:

- Enable one door chime option for each zone.
- If more than one option is enabled, the highest numerical option enabled takes precedence.
  For example: If options 3 and 1 are both enabled, then the zone will sound option 3 'Ding-Dong'.
- If all door chime options are disabled, the keypad/siren will not sound a door chime tone for that particular zone.

Option	Description
[1]	ON: Standard Door Chime Enabled. Traditional door chime tone found on other DSC keypads (6 quick beeps) OFF: Standard Door Chime Disabled
[2]	ON: 'Bing-Bong' Door Chime Enabled OFF: 'Bing-Bong' Door Chime Disabled
[3]	ON: 'Ding-Dong' Door Chime Enabled. OFF: 'Ding-Dong' Chime Disabled.
[4]	ON: 4-second Alarm Tone Door Chime Enabled. The keypad/siren will sound a medium volume alarm signal for 4 seconds. OFF: 4-second Alarm Tone Door Chime Disabled.
[5]-[8]	For Future Use

[804]-[001]-[032] Wireless Device Serial Number

These sections are for manual enrollment of one-way wireless device serial numbers (ESN).
• See [804][101]-[116] for one-way and two-way wireless key enrollment.
• See [804][201]-[204] for two-way keypad enrollment.
• See [804][301]-[304] for two-way siren enrollment.

This is a 6-digit entry. For toggling entries between decimal and hexadecimal values, press [✱].

One-way Devices

The first digit of a 6-digit serial number for one-way devices identifies the type of device as indicated below:

2	Door/Window Contact or Flood Sensor
3	PIR or Glass Break Detector
4	Smoke Detector
5	Panic Pendant
6	Wireless Keys
8	Carbon Monoxide Detector
9	Wireless Keys

Two-way Devices

The first digit of an 8-digit serial number for two-way devices is 2. The second digit identifies the type of device as follows:

20	Wireless Keypad
21	Wireless Keypad with Proximity Tag Detector
22	Future Use
23	Wireless Indoor Siren
24	Wireless Outdoor Siren
25	Wireless two-way Key

i *Leading 00s must be entered for one way wireless devices with six digit serial numbers (E.g. SN 234567 must be entered as 00234567).*

[804][081] Wireless Supervisory Windows

This entry is used to program the length of time a wireless device must be absent from the system before a fault is generated. The wireless supervisory window is calculated by multiplying the programmed value by 15 minutes.
Valid entries are 04 to 96 which correlates to 1 to 24 hours. The default value for North America is 96 (24 hours) and 08 (2 hours) for Europe.

i *This timer may run the programmed time plus up to the number of minutes programmed in this section. For example, the European one-way default is 2 hours, but the actual time could be as long as 2 hours and 8 minutes. The North American one-way default is 24 hours, but the actual time could be as long as 25 hours and 36 minutes.*

UL UL fire listings require a 4 Hr setting (4 Hrs = 16, 16x15 minutes)

[804][082]-[085] Zone Transmitter Supervision Options

Program these sections if the zone transmitter will be supervised. All zones are enabled for supervision by default.

i *DSC does NOT recommend supervision of panic pendants, because they may be removed from the premises.*

[804][101]-[116] Wireless Key Serial Number

These sections are used to enter the wireless key serial numbers. This is an 8-digit hexadecimal entry. To toggle entries between decimal and hexadecimal values, press [✱]. Two-way wireless keys have 8-digit serial numbers, the existing one-way serial numbers have 6-digits. "00" must be added to the start of a 6-digit serial number.

[804][141]-[156] Wireless Key Function Key Options

Up to 6 unique functions can be programmed for each wireless key. Each section requires four 2-digit entries. The following table describes each programmable function.

Entry	Description	DSC Wireless Key
00	Null Key (Key Not Used)	YES
03	Stay Arm	YES
04	Away Arm	YES

05	[✱][9] No-Entry Arm	[✱][9] No-Entry Arm can be used if the wireless key being used is identified.
06	[✱][4] Chime On / Off	YES
13	Command Output 1 [✱][7][1]	[✱][7][1] commands can be used with an access code if the wireless keys are identified.
14	Command Output 2 [✱][7][2]	[✱][7][2] commands can be used with an access code if the wireless keys are identified.
16	[✱][0] Quick Exit	YES
17	[✱][1] Reactivate Stay/Away Zones	YES
25	Instant Stay Arm	YES
27	Disarm (Off)	Disarming can be used with an access code, as long as the wireless keys are identified.
29	Auxiliary Alarm	YES
30	Panic Alarm	YES
33	Night Arm	YES

[804][181]-[182] Wireless Key Enable/Disable

These sections enable each individual key enrolled on the system. The keys are all enabled on the system by default.

[804][201]-[204] Wireless Keypad Serial Number

These sections are used to enter the wireless keypad serial numbers. This is an 8-digit hexadecimal entry. To toggle between decimal and hexadecimal value entries, press [✱].

[804][301]-[304] Wireless Siren Serial Number

These sections are used to enter the wireless siren serial numbers. This is an 8-digit hexadecimal entry. To toggle between decimal and hexadecimal value entries, press [✱].

[804][311]-[314] Wireless Siren Options for Sirens 1-4

Each section contains the following 8 options:

Option	Description
[1]	**ON: Siren Enabled.** The WT49X1 shall activate at full volume for fire, burg, and CO alarm conditions. This option shall also enable walk test and system test indications for WT49X1 modules, and placement test, walk test, and system test indications for WT4911 modules. **OFF: Siren Disabled.** The WT49X1 will not activate for fire, burg, CO Alarm, walk test or system test indications. Placement test will still be sounded by WT4901 modules.
[2]	**ON: Buzzer Notifications Enabled.** The siren will activate audible signals for entry/exit delays, and 24 hour buzzer zone alarms. This may be desirable for indoor sirens, but not outdoor sirens. **OFF: Buzzer Notifications Disabled.** Audible signals will not be sent.
[3]	**ON: Door Chime Enabled.** The siren will activate for door chime conditions. **OFF: Door Chime Disabled.** The siren will not be activated for door chime conditions.
[4]	**ON: Trouble Beeps Enabled.** The siren will activate for trouble beep conditions. Trouble beeps are sounded until any key on the keypad is pressed or until all trouble conditions are restored. This is intended for indoor sirens, but not outdoor sirens or sirens that are mounted in a sleeping area. **Off: Trouble Beeps Disabled.** The siren will not activate for trouble beeps.
[5]	**ON: Bell Squawks Enabled.** The siren will activate programmed bell squawk conditions (e.g., arming, disarming, disarming with alarms in memory). This may be desirable for outdoor sirens, but not indoor sirens. These squawks are sounded at full alarm volume. **OFF: Bell Squawks Disabled.** The siren will not activate for bell squawk conditions.
[6]	**ON: Strobe Enabled.** The strobe will activate for alarms, placement test, walk test, system test and arm/disarm squawk indications. The strobe can be used to identify a system alarm before entering the premises. **OFF: Strobe Disabled.** The strobe will not be activated.
[7]	**ON: Buzzer Alarm / Strobe Follows Bell Time Out.** Indoor Siren - If the indoor siren is set for buzzer notifications (option 2), buzzer alarms, such as 24 Hr buzzer zone types are shut off after they have been active for the duration of BTO. Outdoor siren: If the strobe is enabled on the outdoor siren (option 6), the strobe will shut off once the siren is shut off at the end of the bell duration. **OFF: Buzzer Alarms / Strobe Follows Alarm Condition.** Indoor siren: The siren will sound the buzzer alarm until the alarm condition has been acknowledged (silenced) at the keypad. Outdoor siren: The strobe will continue until an access code has been entered at a system keypad, or a successful disarming request has been serviced.
[8]	**ON: Siren Tamper Enabled.** Tamper conditions from the siren will generate a tamper trouble. The panel will log and communicate the event. **OFF: Siren Tamper Disabled.** Tamper conditions from the siren will not generate a tamper trouble. The panel will log and communicate the event. If a siren tamper condition is present in [*][2], turning off this option shall clear the trouble from the system.

ℹ *This option must be Off for CP-01 compliance.*

[804][320] Global Siren Options

When these options are enabled or disabled, they affect all wireless sirens on the system.

Option	Description
[1]	**ON: Tamper Activates Siren/Strobe.** The siren and strobe will activate if the siren is tampered while the system is armed. **OFF: Tamper Does not Activate Siren/Strobe.** The siren tamper will not activate the bell and strobe while the system is armed.

[2] **ON: Pre-Alarm Signal Enabled.** When the system begins entry delay the entry delay time is sent to the wireless siren. If the wireless siren does not receive a disarm command during the entry delay time, the siren will go into alarm.
OFF: Pre-Alarm Signal Disabled. When the system begins entry delay no entry delay time is sent to the wireless siren. The siren will not go into alarm until it receives a signal from the panel to tell it to go into alarm.

[3] **ON: Strobe Squawks Enabled.** This feature provides a visual indication on outdoor sirens when the system has been successfully armed or disarmed without sounding the siren.
- One flash indicates that the system has been armed.
- Two flashes indicate the system has been disarmed with no alarms in memory.
- Three flash pairs indicates the system has been disarmed with alarms in memory.

OFF: Strobe Squawks Disabled. Outdoor siren LEDs will not flash (strobe) during arming or disarming.

This option functions independently of the programming in section [014] Opt. 1.

[4]-[8] For Future Use

[804][330] WT4911 Maximum Bell Activation Time

This value determines the maximum time the wireless bell/siren will sound before automatically turning off.

[804][900] General Wireless Options

When these options are enabled or disabled, they affect all wireless devices on the system.

Option	Description
[1]	For Future Use
[2]-[6]	For Future Use
[7]	**ON: RF Jam Disabled**. RF Jam conditions will **NOT** be detected, displayed and communicated. **OFF: RF Jam Enabled.** RF Jam conditions will be detected, displayed and communicated.
[8]	**ON: Global Placement Test.** Module selection is NOT required for the placement test. Entering section [904]-[906] begins the testing. All zones, keypads, and sirens that are enrolled are tested. Individual devices do not have to be selected. **OFF: Individual Module Placement Test.** On entering section [904]-[906] a 2-digit entry is required to select the zone, keypad or siren to be tested.

[851] GPRS/Ethernet Module Programming

Refer to the associated manual for programming details.

[898] Wireless Device Enrolment

See Chapter 2 for details.

[899] Template Programming

See Chapter 4 for details.

[900] Alarm System Version

When this section is entered the version of the panel is displayed as a 4-digit decimal entry.
E.g., The entry 1234 = Version 12.34. This is a read-only value.

[904] Wireless Module Placement Test

See Chapter 2 for details.

[905] Wireless Keypad Placement Test

See Chapter 2 for details.

[906] Wireless Siren Placement Test

See Chapter 2 for details.

[990] Installer Lockout Enable

This feature is designed to prevent installers other than the original from resetting the panel. If enabled, the panel gives a distinctive audible indication on power up (the phone line relay will click 10 times). If a hardware default is attempted while lockout is enabled, the default does not occur and the false default attempt is logged to the event buffer. This feature has no effect on a software default (all programming returns to the factory defaults).

[991] Installer Lockout Disable

This section disables the Installer Lockout feature described above.

[996] Restore Wireless Default Programming

All programming in section [804] Wireless Device Programming returns to the factory defaults.

[998] Restore Panel Default Programming

All programming in the PC9155 returns to the factory defaults, except for the Wireless Device Programming sections.

[999] Restore Factory Default Programming

All programming, including wireless device programming, returns to the factory defaults.

[✱] Keypad Programming

To enter Keypad Programming press **[✱][8][Installer Code][✱]**. Keypad sections require 3-digit entries and only affect the keypad used to program them.

[000] Local Keypad Function Key Programming

This section is accessed by entering [✱][000] from Installer Programming. This section is used to program the keypad function keys. Enter digits 1 to 5 to select the function key (F1-F5) to be programmed followed by a 2-digit entry to assign a function to the key. The system will return to the key selection screen (in section [000]). Changes to this programming section affect only the keypad used to program the changes.

Function Key Options

i *Function keys must be held for 2 seconds to perform the described function.*
Function keys will only perform the intended function if the system is not busy.
Pressing function keys programmed with option numbers designated "For Future Use" causes the keypad to display "Function Not Available" and sound an error tone.

00 **Null Key:** (Not Used) The key does not perform any function or give any acknowledgement beeps when pressed.

01-02 For Future Use

03 **Stay Arm:** The system arms with all Stay/Away and Night zones auto-bypassed even if delay zones are violated during the exit delay. This key only works while the system is disarmed, or armed in the Away mode. The panel logs "***Armed in Stay Mode***" for this closing type. If there are no Stay/Away zone types programmed on the system, the system arms in Away mode, and the panel logs "***Armed in Away Mode***".

04 **Away Arm:** The system arms with all Stay/Away and Night zones active even if no delay zones are violated during the exit delay. This key only works while the system is disarmed, armed in the Stay or Night Mode, or during the Exit Delay during Away Arming. The panel logs "***Armed in Away Mode***" for this closing type.

05 **No-Entry Arm [✱][9]:** After pressing this key, entry of a valid access code is required. The system arms with No Entry on Delay zones and all Stay/Away and Night zones are auto-bypassed even if delay zones are violated during the exit delay. The exit delay is silent for this arming type. This key can be used in the armed or disarmed state to allow the user to turn Entry Delay on and off. Entry of a valid access code is required after pressing this key to perform the function when the system is disarmed.

06 **Chime ON/OFF [✱][4]:** This key enables (3 beeps) and disables (steady tone) the chime. It functions similarly to entering **[✱][4]**. This key functions when the system is armed or disarmed.

07 For Future Use

08 **Bypass Mode [✱][1]:** Pressing this key puts the keypad in the Zone Bypass mode. It is similar to entering **[✱][1]** while disarmed. If an access code is required for bypassing (Section **[015]** Option **[5]**), the user must press the function key to enter bypass mode then enter the access code before entry is permitted. This key only works while the system is disarmed.

09-12 For Future Use

13 **Command Output #1 [✱][7][1]:** Pressing this key is the equivalent of entering **[✱][7][1]** to activate the associated PGM. An access code may be required before the output is activated, depending on attribute 5 of the output. This key works whether the system is armed or disarmed.

14 **Command Output #2 [✱][7][2]:** Pressing this key is the equivalent of entering **[✱][7][2]** to activate the associated PGM. An access code may be required before the output is activated, depending on attribute 5 of the output. This key works whether the system is armed or disarmed.

15 For Future Use

16 **Quick Exit [✱][0]:** Pressing this key performs the Quick Exit function and is the same as entering **[✱][0]** while armed. This key only works while the system is armed. The Quick Exit feature must be enabled (section **[015]** Option **[3]**).

17 **Activate Stay/Away Zones [✱][1]:** Pressing this key removes (or re-enables) the automatic bypass on all Stay/Away zones on the system. It is the same as entering **[✱][1]** while armed. If Night zones are programmed, the system arms in night mode if this key is pressed while stay armed. If no Night zones are programmed, the system arms in Away mode. The panel logs the appropriate arming log to the event buffer. If armed in Night or Away mode, this key switches the system back to Stay mode. Pressing this key does not switch the system from Night to Away. This key only works when the system is armed.

18-24 For Future Use

25 **Instant Stay Arm:** This feature operates similarly to the Stay arming function key except for the following: When this function key is pressed for 2 seconds, no acknowledgement beeps are sounded, there is no exit delay, and the system arms immediately. The panel logs "***Armed in Stay Mode***" for this closing type. If no Stay/Away zone types are programmed on the system, the system arms in Away mode with an audible exit delay (for the duration programmed in section **[005]**), and the panel logs ***Armed in Away Mode***.
Note: This function key should not be used on CP-01 panels.

26-32 For Future Use

33 **Night Arm:** The system arms with Night zones auto-bypassed even if delay zones are violated during the exit delay. This key only works while the system is disarmed or armed in the Stay Mode. The panel logs ***Armed in Night Mode*** for this closing type. If no Night zone types are programmed on the system, the system arms in Away mode with an audible exit delay (for the duration programmed in section **[005]**), and the panel logs ***Armed in Away Mode***. The function key must be pressed for 2 seconds. No acknowledgement beeps are sounded and the exit delay is silent.

[001]-[069], [100]-[125] Label Programming

Zone and other labels in these sections can be customized.
Default labels are in English and do not change when an alternate language is selected.
Labels can be programmed locally or downloaded/uploaded using DLS and Connect 24 interactive software.

1. Enter the section number of the desired label to be programmed.
2. Scroll to the desired character's location using the <> Keys.
3. Enter the number of the corresponding character group until the desired character is displayed.

Example:
Press the "2" key 3 times to enter the letter "**F**".
Press the "2" key 4 times to enter the number "**2**".

4. Press [*] to access the label programming options.
Press [*] to select the option.

Press	To Enter/Display
[<]	Display Left (Previous character position)
[>]	Display Right (Next character position)
[*]	[SELECT]
[#]	[ESCAPE]
[0]	[SPACE]
[1]	[A], [B], [C], [1]
[2]	[D], [E], [F], [2]
[3]	[G], [H], [I], [3]
[4]	[J], [K], [L], [4]
[5]	[M], [N], [O], [5]
[6]	[P], [Q], [R], [6]
[7]	[S], [T], [U], [7]
[8]	[V], [W], [X], [8]
[9]	[Y], [Z], [9], [0]

SAVE - Saves the new label. If save is not selected before leaving the label programming section, the changes will be lost.
CHANGE CASE - This option toggles the letter entry between upper case letters (A, B, C) and lower case letters (a, b, c).
ASCII ENTRY - This option is for entering uncommon characters, or as a primary method for programming labels. 255 character entries are available, although some entries are duplicated. Use the [<] [>] keys to scroll through the characters or enter a 3-digit number from 000-255. Press the [✱] key to enter a character in the label.
CLEAR TO END - This option clears the display from the character where the cursor is located to the end of the display.
CLEAR DISPLAY - This option sets all characters in a label to **"**space**"** or cleared.

[074] First Keypad Options

Option	Description
[1]	**ON: Fire Key** (🔥) **Enabled**. Pressing and holding the Fire key for 2 seconds sends a fire key alarm request to the panel. The keypad displays "***Hold Keys Down for Fire Alarm***". **OFF: Fire Key** (🔥) **Disabled.** Pressing the Fire key will not send an alarm or change the keypad's display.
[2]	ON: Aux Key (⚠) Enabled. Pressing and holding the Aux key for 2 seconds sends an aux key alarm request to the panel. The keypad will display *"Hold Keys Down for Aux. Alarm"*. **OFF: Aux Key** (⚠) **Disabled.** Pressing the Aux key will not send an alarm or change the keypad's display.
[3]	**ON: Panic Key** (🛡) **Enabled.** Pressing and holding the Panic key for 2 seconds sends a panic key alarm request to the panel. The keypad will display "***Hold Keys Down for Panic Alarm***". **OFF: Panic Key** (🛡) **Disabled.** Pressing the Panic key will not send an alarm or change the keypad's display.
[4]	ON: Quick Arm Prompt ON. The "*Press (✱) for < > Quick Arming*" prompt is displayed when scrolling through the (*) menus when disarmed. **OFF: Quick Arm Prompt OFF.** The **"*Press (✱) for < > Quick Arming*"** prompt is not displayed when scrolling through the (*) menus when disarmed. ℹ *This feature functions independently of the Quick Arm Enabled option (section [015] [4]).*
[5]	**ON: Quick Exit Prompt ON.** The **"*Press [✱] for < > Quick Exit*"** prompt occurs when scrolling through the base (✱) menus when armed. **OFF: Quick Exit Prompt OFF.** The **"*Press [✱] for < > Quick Exit*"** prompt does not occur when scrolling through the base (✱) menus when armed. ℹ *This feature functions independently of the Quick Exit Enable option (section [015] [3]).*
[6]	**ON: Bypass Options Prompt ON.** Scrolling through the zone bypass (**[✱][1]**) menu displays the **"*Press (✱) for < > Bypass Options*"** prompt. **OFF: Bypass Options Prompt OFF.** Scrolling through the zone bypass menu does NOT display the **"*Press (✱) for < > Bypass Options*"** prompt. ℹ *This feature does not affect operation of the Bypass Options features if manually keyed into the system by entering 00, 91, 95 or 99.*
[7]	**ON: User Initiated Call-up Prompt ON.** The **"*Select Option < > User Call-up*"** prompt is displayed when scrolling through the **[✱][6]** User Functions menu. **OFF: User Initiated Call-up Prompt OFF.** The "*Select Option < > User Call-up*" prompt is blocked and is not displayed when scrolling through the **[✱][6]** User Functions menu. ℹ *This feature does not affect operation of the User Initiated Call Up feature.*
[8]	**ON: Hold Panic Key Prompt ON.** The **"*Hold Key Down for Panic Alarm*"** prompt is displayed when the Panic key is pressed. **OFF: Hold Panic Key Prompt OFF.** The **"*Hold Key Down for Panic Alarm*"** prompt is NOT displayed when the Panic key is pressed.

[075] Second Keypad Options

Option	Description
[1]	**ON: Local Clock Enabled.** When the keypad is idle, the date and time are displayed until a key is pressed. **OFF: Local Clock Disabled.** When the keypad is idle, the display shows current system status.
[2]	ON: Local Clock Displays 24 Hr Time. The local clock displays time in 24hr format (i.e., 00:00 - 23:59). OFF: Local Clock displays AM/PM Time. The local clock displays time in 12hr format (i.e., 12:00 AM - 12:00 PM).

System time ([✱][6][Master Code][1]) is programmed in 24hr format and is not affected by this setting.

[3]	ON: Auto Alarm Scroll Enabled. When the bell is active, or when an alarm is in memory while armed, the keypad automatically overrides the local clock and scrolls through (displays) all alarms. **OFF: Auto Alarm Scroll Disabled.** Alarms do not override the local clock and display alarms.
[4]	ON: Language Selection Accessible from any Menu. Pressing and holding the scroll keys "< >" simultaneously will enter Language Selection from any menu. OFF: Language Selection Accessible from Installer Menu Only. Pressing and holding the scroll keys "< >" simultaneously will enter Language Selection from Installer Programming ([✱][8]) only.
[5]	**ON: Power LED Enabled.** The keypad power LED may be used to indicate AC present or absent status. **OFF: Power LED Disabled.** The keypad power LED shall remain off for all conditions.
[6]	**ON: Power LED Indicates AC Present.** The LED is ON when AC is present. The LED is OFF when AC is absent. **OFF: Power LED indicates AC Absent.** The LED is OFF when AC is present. The LED is steady ON when AC is absent.
[7]	**ON: Alarms are Displayed while Armed.** Alarms occurring when the system is armed are displayed. **OFF: Alarms are NOT Displayed While Armed.** The keypad does NOT indicate that an alarm has occurred on the system while armed. When the system is disarmed, the keypad displays the zone(s) that went into alarm during the armed period.
[8]	**ON: Auto Scroll of Open Zones is Enabled.** The keypad overrides the local clock display and displays all open zones including bypassed zones when the system is disarmed. **OFF: Auto Scroll of Open Zones is disabled.** The keypad does NOT override the local clock display to display all open zones.

[076] Third Keypad Options

Option	Description
[1]-[4]	For Future Use
[5]	**ON: Late to Open Prompts are Enabled.** The ***"Late to Open"*** enable/disable prompts in **[✱][6]** user functions are available in the menu. **OFF: Late to Open Prompts are Disabled.** The ***"Late to Open"*** enable/disable prompts are not available.
[6]	**ON: Power Save Mode ON.** After 10 seconds of no activity the keypad display and status LEDs turn off. If the user is accessing **[✱]** menus, the system waits for the user to exit before starting this timer. The keypad exits power save mode when a key is pressed, entry delay begins or the system goes into alarm. This feature is intended to reduce power consumption during AC failure or battery only operation. **OFF**: Power Save Mode OFF. The keypad is always active.
[7]-[8]	For Future Use

[077] LCD Message

Enter a 32 character message. If anything other than blanks are programmed into this section, the keypad times out to this message instead of the Time and Date display. Any option or feature that overrides the clock display also overrides the LCD message. An override by the system is not counted against the message duration programmed in section [078]. This message can be programmed in Installer Programming or using DLS.

[078] Downloaded Message Duration Options

Enter a 3 digit number. Valid entries are 001-255 seconds. 000 = Unlimited Duration.
This section is used to program the number of times a LCD message (programmed in section [077]) must be cleared from the LCD displays (by pressing any key) before it will no longer be displayed. If programmed on the system, the LCD keypad displays the message when not in use. Programming 000 in this section will result in the message never clearing. This could be used as a greeting (residential) or a company message (commercial). This overrides the settings of Clock Display options in section [075].

[996] Reset Labels to Factory Default

Resets all custom labels to the factory defaults. See this section in the Programming Work Sheets for details.

[997] Keypad Version

Entering this section displays the keypad version. The keypad version is displayed as a 4-digit decimal entry.
E.g., Entry is 1234 = Version 12.34. This is a read-only value.

[998] Initiate Global Label Broadcast

Programmed keypad labels are broadcast and installed on all system keypads from keypad 1.
Enter [✱][998] to broadcast the labels programmed in sections [✱][001]-[069] and [✱][100]-[125]. This function is also required for broadcasting labels downloaded using DLS software.

> **i** *This function can only be initialized from keypad 1. All labels should be manually programed on the first keypad enrolled on the system in order to broadcast.*

[999] Restore Factory Default Programming

Resets all keypad programming to the factory defaults. This will unenroll the keypad from the system.

ASCII Chart

> **i** *ASCII entries 000-007 are special characters that vary based on the language selected.*

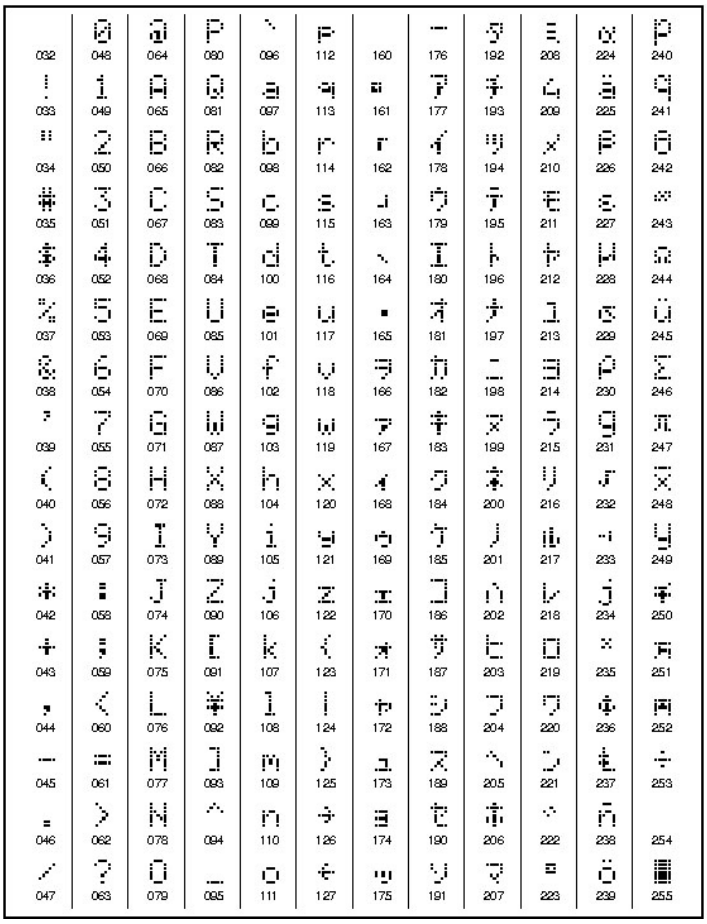

6 Testing & Troubleshooting

6.1 Wireless Device Placement Test

See sections 2.4 and 2.5

6.2 Testing the System

Inform the monitoring station when beginning or ending alarm system testing.
It is the user's responsibility to test the alarm system weekly (excluding smoke detectors). Ensure that all the steps in the two tests below are followed.

- Power up system
- Program options as required (See ***programming*** section)
- Violate, then restore zones
- Verify correct ***Reporting Codes*** are sent to the central station

Step 1

Siren and Display Test:

```
System is
Ready to Arm  <>
```

This test activates all display pixels and indicator lights and does a four second check of the siren.

1. Press [*] [6] [Master Code] [4].
2. The following occurs:
   - The alarm system activates the bell output on medium volume for 2 seconds followed by full volume alarm for 2 seconds. All display lights and LCD pixels turn ON.
   - The Ready, Armed, Trouble and Power LEDs flash for the duration of the test.
3. To exit the function menu, press [#].

Step 2

Walk Test:

```
Secure System
Before Arming <>
```

```
Secure or
Arm System    <>
```

Walk Test mode allows operation of each detector in the alarm system to be tested. While in Walk Test mode, the Ready, Armed, and Trouble LED's flash to indicate that the walk test is active. The walk test can be terminated at anytime by re-entering [*] [6] [Master code] [8] on the keypad. The alarm system automatically terminates the walk test on completion. It will annunciate with an audible warning (5 beeps every 10 seconds), beginning five minutes before the termination of the test.

1. Before testing, ensure that the alarm system is disarmed and the Ready light is on.
2. Press [#] and close all zones to return the alarm system to the ready state.
3. Perform an alarm system test by following the steps in the previous section.
4. Press [*] [6] [Master code] [8] to initiate the walk test.
5. To test the zones, activate each detector in turn (e.g., open each door/window or walk in motion detector areas).

When each zone (detector) is activated, the alarm system displays "Secure System Before Arming < >", or "Secure or Arm System", depending on the zone type and the siren will sound for 2 seconds. Use the [<] [>] keys to view which zones are open. The message disappears when all of the zones are closed.

6.3 Resetting the System to Factory Defaults

Resetting the alarm system returns it to the factory programmed defaults.
All programmed information including wireless enrollment, telephone numbers etc. will be lost.
- The Installer code changes back to [5555].
- The Master code reverts back to [1234].

Soft Reset

- To enter 'System Default' from the "Ready to Arm Screen":
  Press [*][8][X][X][X][X]
  where [X][X][X][X] represents the new installer code programmed in Installer Programming to replace the 5555 default installer code.
- To reset the alarm system:
  Press [9][9][9][X][X][X][X][9][9][9]

```
System is
Ready to Arm  <>
```

```
Enter Section
___
```

Other software resets are as follows:
- System Default [999]
- Panel Only [998]
- Wireless Devices [996]

Hard Reset

A hard reset performs the identical function as above. It is used when the Installer code is unknown or the keypad is not communicating with the alarm system. See steps below:
- Power down the system.
- Remove the front cover of the PC9155.
- On the terminal block, jumper I/O terminal 1 to I/O terminal 2 with nothing else connected to these two terminals.
- Power up the system for 20 seconds. (5 beeps sound to indicate that the reset has been successful).
- Power down the system and remove the jumper.

Label programming is stored in the system and locally at the keypads.
To retain label programming after performing a system reset (hard or soft) you must rebroadcast the labels by entering Installer Programming then pressing [✱][998].

6.4 Troubleshooting

General Start-up Troubles

Trouble	Cause	Troubleshooting
"Failed to Enroll" message appears on the keypad	This can only appear after [1] & [*] are pressed to enroll the keypad. This message is an indication that the keypad did not receive an enrolment success confirmation.	• Retry the enrolment by pressing [1] & [*] again. • Check that the keypad's ESN is programmed in the panel. • If using "Quick Enroll" on power up check that the "Ready and "Power" indicators are still flashing on the panel. • Check for RF interference. • Check that the keypad is the correct model for the panel.
"Hold [1] and [*] to Enroll Keypad" appears on keypad	Normal message for an un-enrolled keypad or if enrolment was unsuccessful.	• Enroll the keypad or troubleshoot as per "Failed to Enroll" message.

Other Troubles

Flashing Trouble LED	The keypad's batteries are low.	• Replace the keypad's batteries.
Blank display, no response to key presses	Keypad battery may have discharged beyond the usable level.	• Remove power, replace batteries or AC adapter.
"Panel Response Not Received" message appears on the keypad	The keypad has lost wireless communication with the panel. (Occasional display of this message may be caused by local radio frequency interference).	• If problem is intermittent perform the placement test and check for sources of radio interference. • Check that the keypad's ESN is programmed in the panel. • Press [1] & [*] to enroll the keypad. • Check that the keypad is the correct model for use with the panel. • Check if the panel can communicate by power cycling the panel and enrolling a new keypad.

[✱][2] Troubles

- Power up system
- Enter [✱][2] to view Troubles
- Perform actions indicated in the tables below

[✱][2] Trouble Summary

Trouble [0] GPRS/Ethernet Module Trouble
Trouble [1] Service Required - Press [1] for more information
  Low Battery
  General System Trouble
  General System Tamper
Trouble [2] AC Trouble
Trouble [3] Telephone Line Trouble
Trouble [4] Failure to Communicate
Trouble [5] Device Fault - Press [5] for more information
Trouble [6] Device Tamper - Press [6] for more information
Trouble [7] Wireless Device Low Battery - Press [7] for more information
Trouble [8] Loss of Time or Date

Trouble	Cause	Troubleshooting
Trouble [0] GPRS/Ethernet Module Trouble		**Press [<][>] to determine specific trouble**
Alternate Comm SIM Lock	The SIM lock feature has been enabled and the unit has not been programmed with the correct PIN for the SIM card.	• Please refer to the TL260GS/TL265GS/GS2060/GS2065 Installation Manual for more details.
GPRS/Ethernet Module Trouble	This condition is created when the GPRS/Ethernet module has detected a radio or SIM failure, a GPRS network trouble, or insufficient signal strength.	• Please refer to the TL260GS/TL265GS/GS2060/GS2065 Installation Manual for more details.
Alternate Comm GSM Trouble	This condition is created when the GPRS/Ethernet module has detected a network absent condition.	• Please refer to the TL260GS/TL265GS/GS2060/GS2065 Installation Manual for more details.
Alternate Comm Receiver Trouble	This condition is generated when the GPRS/Ethernet module loses supervision or fails to initialize a receiver.	• Please refer to the TL260GS/TL265GS/GS2060/GS2065 Installation Manual for more details.
Alternate Comm Fault	This condition is created when the PC9155 loses communication with an Ethernet or GPRS module on the system.	• Please refer to the TL260GS/TL265GS/GS2060/GS2065 Installation Manual for more details.
Alternate Comm Config SMS Trouble	This condition is created when the GPRS/Ethernet module detects a Connect 24 Configuration SMS failure trouble.	• Please refer to the TL260GS/TL265GS/GS2060/GS2065 Installation Manual for more details.
Trouble [1] Service Required		**Press [1] to determine specific trouble**
Low Battery	Main panel battery less than 11.4V +/- 0.1V. NOTE: This trouble condition will not clear until the battery voltage is 12.5V +/- 0.1V.	NOTE: If battery is new allow 24 hrs. for battery to charge. • Verify voltage measured across AC terminals is 16-18 VAC. • Verify voltage measured across battery terminals is 12.5V +/- 0.1V. • Replace transformer if required. • Disconnect then reconnect battery leads.
General System Trouble	The system has detected the presence of a RF Jam for 20 seconds or communications with the wireless receiver have failed causing a hardware fault.	Check Event Buffer to determine specific trouble. If buffer logs RF Jam trouble: check for external 433MHZ signal sources. To disable RF Jam, enable option [7] in program section [804] subsection [900]. • If buffer logs 'Hardware Fault' - replace panel.
General System Tamper	Cover tamper tripped.	• Verify that tamper buttons are installed into backplate and front-plate, and that the frontplate is fully in place. • Verify that the panel is properly secured to the wall with the front cover on.

Trouble [2] AC Failure

AC Failure	No AC at panel AC input terminals.	• Verify voltage measured across AC terminals is 16-18VAC. Replace transformer if required.

Trouble [3] Telephone Line Trouble

Telephone Line Trouble	Phone line voltage at TIP, RING on main panel less than 3VDC.	Measure the voltage across TIP and RING on the panel: • No phone off-hook – 50VDC (approx.). • Any phone off-hook – 5VDC (approx.). Wire incoming line directly to TIP and RING. • If trouble clears, check wiring or the RJ-31x phone jack.

Trouble [4] Failure to Communicate

Failure to Communicate	Panel fails to communicate one or more events to central station.	Connect a handset to TIP and RING of the control panel. Monitor for the following conditions: **Continuous dial tone** • Reverse TIP and RING. **Recorded operator message comes on** • Verify correct phone number is programmed. • Dial the number programmed using a regular telephone to determine if a [9] must be dialed or if 800 service is blocked. **Panel does not respond to handshakes** • Verify the format programmed is supported by the central station. **Panel transmits data multiple times without receiving a handshake** • Verify that the account number and reporting codes are correctly programmed. **Contact ID and Pulse formats** • Program a HEX [A] to transmit a digit [0]. **SIA format** • Program a digit [0] to transmit a digit [0]. **GSM/Ethernet** • Refer to the TL260GS/TL265GS/GS2060/GS2065 Installation Manual for troubleshooting actions.

Trouble [5] Device Fault — Press [5] to determine specific devices with a fault trouble

1st press - Zone Faults **2nd press -** Keypad Faults **3rd press** - Siren Faults	Hard-wired zone fault condition present. A short circuit is present on one or more zones with double end-of-line resistors enabled. One or more wireless devices have not checked in within the programmed time.	• Ensure fire zones have a 5.6K resistor (Green, Blue, Red) connected. • Remove the wire leads from I/O and AUX- terminals and measure the resistance of the wire leads. **Connect a 5.6K resistor (Green, Blue, Red) across the I/O and** AUX-**terminals. Verify the trouble condition clears.** Perform a module placement test – verify the wireless device is in a good location. • If bad test results occur, test the wireless device in another location. • If the wireless device now tests good, the original mounting location was bad. • If the wireless device continues to give bad test results replace the wireless device.

Trouble [6] Device Tamper — Press [6] to determine specific zones with a tamper trouble

1st press - Zone Tampers **2nd press -** Keypad Tampers **3rd press** - Siren Tampers	An open circuit is present on one or more zones with double end-of-line resistors enabled. A tamper condition is present on one or more wireless devices.	• Remove the wire leads from I/O and AUX- terminals and measure the resistance of the wire leads. • Connect a 5.6K resistor (Green, Blue, Red) across the I/O and AUX- terminals. • Verify the trouble condition clears. • Ensure device cover is secure. • Ensure device is correctly mounted for wall tamper operation, violate, then restore the tamper. • If tamper condition persists then replace wireless device.

Trouble [7] Wireless Device Low Battery **Press [7] to scroll through specific devices with a Low Battery Trouble**

1st press - Wireless Zones 2nd press - Wireless Keys 3rd press - Wireless Keypads 4th press - Wireless Sirens 5th press - Proximity Tags	One or more wireless devices has a low battery. NOTE: The event is not logged to the event buffer until the wireless device low battery delay time expires. Program section [377].	Replace Battery • Verify zone operation. • Verify that tamper and low battery condition is cleared and reported. A flashing Trouble LED on a keypad indicates that it's battery is low. To determine which indoor siren is in low battery, press the test button. If no test indications are sounded, replace the batteries. To determine which outdoor siren is in low battery, remove the battery and reconnect it. If the strobe doesn't flash, replace the battery. If a proximity tag is in low battery, the tag must be deleted and replaced before the trouble will be cleared from [*][2]. NOTE: Replacing batteries will cause a tamper condition. Replacing the cover will clear the tamper causing the associated reporting codes to be sent to the central station.

Trouble [8] Loss of Clock

Loss of Time & Date	The main panel internal clock is not set.	To program the time and date: • Enter [✱][6][Master Code] then press [1]. • Enter the time and date (in military) using the following format: HH:MM MM/DD/YY Example: For 6:00 pm, Nov. 30, 2008 Enter: [18] [00] [11] [30] [08]

6.5 Battery Removal/Replacement

Disconnect AC power and battery before proceeding.

Removal:

(1) Disconnect battery cable from the battery terminals.
(2) Remove GPRS/Ethernet module if present.
(3) Depress the right battery retaining bracket, simultaneously lift battery free of retaining clip.
(4) Slide battery up and right to clear the left retaining clip.
(5) Dispose of battery in accordance with local regulations.

Replacement:

(1) Remove terminal protection from battery.
(2) Install battery cable on battery spade lug terminals.

> **i** *Ensure red cable is connected to the positive (+) terminal and the black cable is connected to the negative (-) terminal.*

(3) Slide left side of battery under the left battery retaining bracket.
(4) Insert a flat head screwdriver between the battery and right retaining bracket. Lever the right retaining bracket to the right while pressing the battery firmly in place.
(5) If required route battery cable through wire guides and connect to the PC9155 terminal board.

Appendix A: Reporting Code Formats

The following tables contain Contact ID and Automatic SIA format reporting codes. See programming sections [320]-[348] for reporting codes.

Contact ID

The first digit (in parentheses) is automatically sent by the control. The second two digits are programmed to indicate specific information about the signal. For example, if zone 1 is an entry/exit point, you could program the event code as [34]. The central station would receive the following:
*BURG - ENTRY/EXIT - 1 where the "1" indicates which zone went into alarm.

SIA Format - Level 2 (Hard Coded)

The SIA communication format used in this product follows the level 2 specifications of the SIA Digital Communication Standard - October 1997. This format sends the account code along with its data transmission. The transmission will look similar to the following at the receiver:

N ri1 BA 01

N = New Event
ri1 = Partition /Area Identifier
BA = Burglary Alarm
01 = Zone 1

A system event will use the Area Identifier ri00.

Section #	Reporting Code	Code Sent When	Dialer Direction	Automatic Contact ID Codes	SIA Auto Rep Codes
[320]-[323]	Zone Alarms	Zone goes into alarm	A/R	See Table 3	See Table 3
[324]-[327]	Zone Restorals	Zone alarm condition has been restored	A/R		
[328]	Duress Alarm	Duress code entered at keypad	A/R	E(1)21-000	HA-00
[328]	Opening After Alarm	System disarmed with alarm in memory	A/R	E(4)58-000	OR-00
[328]	Recent Closing	Zone alarm occurs within two minutes of system arming	A/R	E(4)59-UUU	CR-UU
[328]	Cross Zone (Police Code) Alarm	Two zones go into alarm during any given armed-to-armed period, or before the police code timer expires	A/R	E(1)39-000	BM-00/BV-00
[328]	Burglary Not Verified	This event is transmitted when a second cross zone alarm does not occur within the cross zoning time	A/R	E(3)78-000	BG-00
[328]	Alarm Cancelled	Sent when the system is disarmed after an alarm, but before the expiry of the alarm cancellation timer	A/R	E(4)A6-UUU	OC-UU
[329]	[F] Key Alarm	Keypad Fire Alarm (Alarm and Restore rep. codes sent together)	A/R	E(1)1A-000	FA-00
[329]	[F] Key Alarm Restoral	Keypad Fire Alarm Restore (Alarm and Restore rep. codes sent together)	A/R	R(1)1A-000	FH-00
[329]	[A] Key Alarm	Keypad Auxiliary Alarm (Alarm and Restore rep. codes sent together)	A/R	E(1)AA-000	MA-00
[329]	[A] Key Alarm Restoral	Keypad Auxiliary Alarm Restore (Alarm and Restore rep. codes sent together)	A/R	R(1)AA-000	MH-00
[329]	[P] Key Alarm	Keypad Panic Alarm (Alarm and Restore rep. codes sent together)	A/R	E(1)2A-000	PA-00
[329]	[P] Key Alarm Restoral	Keypad Panic Alarm Restore (Alarm and Restore rep. codes sent together)	A/R	R(1)2A-000	PH-00
[329]	Fail to Report In	A zone was not tripped between the inactivity monitoring windows	A/R	E(1)A2-000	NA-00
[330]-[337]	Zone Tamper	A zone is tampered	T/R	E(3)83-ZZZ	TA-ZZ
[330]-[337]	Zone Tamper Restore	A tampered zone has restored	T/R	R(3)83-ZZZ	TR-ZZ
[338]	General System Tamper	The case/cover has a tamper alarm	T/R	E(1)45-000	ES-00
[338]	General System Tamper Restore	The case/cover tamper condition has restored	T/R	R(1)45-000	EJ-00
[338]	Keypad Lockout	Maximum number of incorret access codes have been entered at a keypad	T/R	E(4)61-000	JA-00
[339-341]	Closings	System armed (User 01-16, 40 indicated)	O/C	R(4)A1-UUU	CL-UU
[341]	Partial Closing	One or more zones bypassed when system armed	O/C	E(4)56-000	CG-00
[341]	Automatic Zone Bypass	A zone was bypassed at the time of arming	O/C	E(5)7A-ZZZ	UB-ZZ
[341]	Special Closing	Closing (arming) using one of the following methods: quick arm, keyswitch, function key, maintenance code, DLS software, Wireless key	O/C	R(4)AA-000	CL-00
[341]	Exit Fault	Sent when an Exit Error occurs and the Entry Delay expires before the system is disarmed	O/C	E(3)74-ZZZ	EA-ZZ
[342-344]	Openings	System disarmed (User 01-16, 40 indicated)	O/C	E(4)A1-UUU	OP-UU
[344]	Special Opening	Opening (disarming) using one of the following methods: Keyswitch, maintenance code, DLS software, wireless key	O/C	E(4)AA-000	OP-00
[344]	Late to Open	The system was not disarmed when the late to open time expired	O/C	E(4)53-000	CT-00
[345]	Battery Trouble	PC9155 system battery is low	MA/R	E(3)A2-000	YT-00

Section #	Reporting Code	Code Sent When	Dialer Direction	Automatic Contact ID Codes	SIA Auto Rep Codes
[346]	Battery Trouble Restore	PC9155 system battery voltage normal	M A/R	R(3)A2-000	YR-00
[345]	AC Line Trouble	AC power to control panel is disconnected or interrupted (Follows AC Failure communication delay)	M A/R	E(3)A1-000	AT-00
[346]	AC Line Restore	AC power restored (Follows AC Failure communicaton delay)	M A/R	R(3)A1-000	AR-00
[345]	Fire Trouble	Trouble occured on a fire zone	M A/R	E(3)73-000	FT-00
[346]	Fire Trouble Restore	A trouble on a fire zone has been restored	M A/R	R(3)73-000	FJ-00
[345]	Auxiliary Power Trouble	The Aux+ current draw has exceeded 200mA	M A/R	E(3)12-000	YP-00
[346]	Auxiliary Power Trouble Restore	The Aux+ current draw is 200mA or less	M A/R	R(3)12-000	YQ-00
[345]	TLM Failure	Line current is not available on the phone line	M A/R	E(3)51-000	LT-01
[346]	TLM Restoral	Line current has been detected on the phone line	M A/R	R(3)51-000	LR-01
[345]	General System Trouble	A RF Jam or Hardware Fault condition has occurred	M A/R	E(3)AA-000	YX-00
[346]	General System Trouble Restore	A RF Jam or Hardware Fault condition has restored	M A/R	R(3)AA-000	YZ-00
[345]	General System Supervisory	The PC9155 has detected an alternate communicator fault	M A/R	E(3)3A-000	ET-00
[346]	General System Supervisory Restore	PC9155 has restored an alternate communicator fault.	M A/R	R(3)3A-000	ER-00
[347]	Phone #1-4 FTC Restoral	The PC9155 has restored communications with the central station using Phone #1to #4 (after FTC)	M A/R	R(3)54-000	YK-00
[347]	DLS Lead In	A downloading session has been started by a user initiated call-up, or call-back features	M A/R	E(4)11	RB-00
[347]	DLS Lead Out	A downloading session has terminated	M A/R	E(4)12	RS-00
[347]	Zone Fault	One or more wireless zones are in fault	M A/R	E(3)8A-ZZZ	UT-ZZ
[347]	Zone Fault Restore	All wireless zone fault conditions have been restored	M A/R	R(3)8A-ZZZ	UJ-ZZ
[347]	Delinquency	The programmed amount of time (days or hours) for delinquency has expired without zone activity or without the system being armed	M A/R	E(6)54-000	CD-00
[347]	Wireless Zone Low Battery Trouble	A wireless zone has a low battery trouble	M A/R	E(3)84-ZZZ	XT-ZZ
[347]	Wireless Zone Low Battery Restore	No wireless zones have a low battery trouble	M A/R	R(3)84-ZZZ	XR-ZZ
[347]	Wireless Device Low Battery Trouble	A wireless key, proximity tag, keypad or siren has a low battery trouble	M A/R	E(3)84-000	XT-00
[347]	Wireless Device Low Battery Restore	No wireless keys, proximity tags, keypads or sirens have a low battery trouble	M A/R	R(3)84-000	XR-00
[347]	Installer Lead In	Installer's mode has been entered	M A/R	E(6)27-000	LB-00
[347]	Installer Lead Out	Installer's mode has been exited	M A/R	E(6)28-000	LS-00
[347]	Siren 1Fault	A wireless supervision fault has occurred for Siren 1	M A/R	E(3)8A-080	UT-80
[347]	Siren 1Fault Restore	A wireless supervision fault has restored for Siren 1	M A/R	R(3)8A-080	UJ-80
[347]	Siren 2 Fault	A wireless supervision fault has occurred for Siren 2	M A/R	E(3)8A-081	UT-81
[347]	Siren 2 Fault Restore	A wireless supervision fault has restored for Siren 2	M A/R	R(3)8A-081	UJ-81
[347]	Siren 3 Fault	A wireless supervision fault has occurred for Siren 3	M A/R	E(3)8A-082	UT-82
[347]	Siren 3 Fault Restore	A wireless supervision fault has restored for Siren 3	M A/R	R(3)8A-082	UJ-82
[347]	Siren 4 Fault	A wireless supervision fault has occurred for Siren 4	M A/R	E(3)8A-083	UT-83
[347]	Siren 4 Fault Restore	A wireless supervision fault has restored for Siren 4	M A/R	R(3)8A-083	UJ-83
[347]	Keypad 1Fault	A wireless supervision fault has occurred for Keypad 1	M A/R	E(3)8A-070	UT-70
[347]	Keypad 1Fault Restore	A wireless supervision fault has restored for Keypad 1	M A/R	R(3)8A-070	UJ-70
[347]	Keypad 2 Fault	A wireless supervision fault has occurred for Keypad 2	M A/R	E(3)8A-071	UT-71

Section #	Reporting Code	Code Sent When	Dialer Direction	Automatic Contact ID Codes	SIA Auto Rep Codes
[347]	Keypad 2 Fault Restore	A wireless supervision fault has restored for Keypad 2	MA/R	R(3)8A-071	UJ-71
[347]	Keypad 3 Fault	A wireless supervision fault has occurred for Keypad 3	MA/R	E(3)8A-072	UT-72
[347]	Keypad 3 Fault Restore	A wireless supervision fault has restored for Keypad 3	MA/R	R(3)8A-072	UJ-72
[347]	Keypad 4 Fault	A wireless supervision fault has occurred for Keypad 4	MA/R	E(3)8A-073	UT-73
[347]	Keypad 4 Fault Restore	A wireless supervision fault has restored for Keypad 4	MA/R	R(3)8A-073	UJ-73
[348]	Walk Test Begin	Walk test has been started by the user	T	E(6)A7-UUU	TS-UU
[348]	Walk Test End	Walk test has timed out or has been cancelled by the user	T	R(6)A7-UUU	TE-UU
[348]	Periodic Test	PC9155 system test transmission time has expired	T	E(6)A2-000	RP-00
[348]	System Test	The user has performed a system test	T	E(6)A1-000	RX-00
[609]	Keypad 1Tamper	A tamper condition has been detected from Keypad 1	T/R	E(3)83-070	TA-70
[609]	Keypad 1Tamper Restore	A tamper condition from Keypad 1has been restored	T/R	R(3)83-070	TR-70
[609]	Keypad 2 Tamper	A tamper condition has been detected from Keypad 2	T/R	E(3)83-071	TA-71
[609]	Keypad 2 Tamper Restore	A tamper condition from Keypad 2 has been restored	T/R	R(3)83-071	TR-71
[609]	Keypad 3 Tamper	A tamper condition has been detected from Keypad 3	T/R	E(3)83-072	TA-72
[609]	Keypad 3 Tamper Restore	A tamper condition from Keypad 3 has been restored	T/R	R(3)83-072	TR-72
[609]	Keypad 4 Tamper	A tamper condition has been detected from Keypad 4	T/R	E(3)83-073	TA-73
[609]	Keypad 4 Tamper Restore	A tamper condition from Keypad 4 has been restored	T/R	R(3)83-073	TR-73
[609]	Siren 1Tamper	A tamper condition has been detected from Siren 1	T/R	E(3)83-080	TA-80
[609]	Siren 1Tamper Restore	A tamper condition from Siren 1has been restored	T/R	R(3)83-080	TR-80
[609]	Siren 2 Tamper	A tamper condition has been detected from Siren 2	T/R	E(3)83-081	TA-81
[609]	Siren 2 Tamper Restore	A tamper condition from Siren 2 has been restored	T/R	R(3)83-081	TR-81
[609]	Siren 3 Tamper	A tamper condition has been detected from Siren 3	T/R	E(3)83-082	TA-82
[609]	Siren 3 Tamper Restore	A tamper condition from Siren 3 has been restored	T/R	R(3)83-082	TR-82
[609]	Siren 4 Tamper	A tamper condition has been detected from Siren 4	T/R	E(3)83-083	TA-83
[609]	Siren 4 Tamper Restore	A tamper condition from Siren 4 has been restored	T/R	R(3)83-083	TR-83
[610]	Alternate Communicator Receiver 1Trouble	The TL265GS/GS2065 has detected receiver 1 has gone absent or failed to initialize	MA/R	E(3)5A-001	YS-01
[610]	Alternate Communicator Receiver 1Restore	The TL265GS/GS2065 has detected receiver 1 is present and has been initialized	MA/R	R(3)5A-001	YK-01
[610]	Alternate Communicator Receiver 2 Trouble	TL265GS/GS2065 has detected receiver 2 has gone absent or failed to initialize	MA/R	E(3)5A-002	YS-02
[610]	Alternate Communicator Receiver 2 Restore	The TL265GS/GS2065 has detected receiver 2 is present and has been initialized	MA/R	R(3)5A-002	YK-02
[610]	Alternate Communicator Receiver 3 Trouble	TL265GS/GS2065 has detected receiver 3 has gone absent or failed to initialize	MA/R	E(3)5A-003	YS-03
[610]	Alternate Communicator Receiver 3 Restore	The TL265GS/GS2065 has detected receiver 3 is present and has been initialized	MA/R	R(3)5A-003	YK-03
[610]	Alternate Communicator Receiver 4 Trouble	TL265GS/GS2065 has detected receiver 4 has gone absent or failed to initialize	MA/R	E(3)5A-004	YS-04
[610]	Alternate Communicator Receiver 4 Restore	The TL265GS/GS2065 has detected receiver 4 is present and has been initialized	MA/R	R(3)5A-004	YK-04
[610]	General Alternate Communicator Trouble	The TL265GS/GS2065 has detected a Radio/SIM failure, GSM Trouble, Ethernet Trouble, or SMS Config Trouble	MA/R	E(3)AA-001	YX-01
[610]	General Alternate Communicator Trouble Restore	The TL265GS/GS2065 has restored a Radio/SIM failure, GSM Trouble, Ethernet Trouble and SMS Config trouble	MA/R	R(3)AA-001	YR-01
[347]	Remote Programming Begin	The TL265GS/GS2065 module has successfully connected to the programming software	MA/R	E(6)27-000	LB-00
[347]	Remote Programming End	The TL265GS/GS2065 module has disconnected from the programming software	MA/R	E(6)28-000	LS-00

A/R = alarms/restorals; T/R = tampers/restorals; O/C = openings/closings; MA/R = miscellaneous alarms/restorals; T = test transmissions
UU = user number (user01-16,40); ZZ = zone number (01-34)

Contact ID Programmed Zone Alarm/Restoral Event Codes

(as per SIA DCS: 'Contact ID' 01-1999):

Program any of these codes for zone alarms/restorals when using the standard (non-automatic) Contact ID reporting format.

Medical Alarms	(1)34 Entry / Exit
(1)AA Medical	(1)35 Day / Night
(1)A1 Pendant Transmitter	(1)36 Outdoor
(1)A2 Fail to Report In	(1)37 Tamper
Fire Alarms	(1)38 Near Alarm
(1)1A Fire Alarm	**General Alarms**
(1)11 Smoke	(1)4A General Alarm
(1)12 Combustion	(1)43 Exp. Module Failure
(1)13 Water Flow	(1)44 Sensor Tamper
(1)14 Heat	(1)45 Module Tamper
(1)15 Pull Station	(1)4A Cross Zone Police Code
(1)16 Duct	**24 Hour Non-Burglary**
(1)17 Flame	(1)5A 24 Hour non-Burg
(1)18 Near Alarm	(1)51 Gas Detected
Panic Alarms	(1)52 Refrigeration
(1)2A Panic	(1)53 Loss of Heat
(1)21 Duress	(1)54 Water Leakage
(1)22 Silent	(1)55 Foil Break
(1)23 Audible	(1)56 Day Trouble
Burglar Alarms	(1)57 Low bottled Gas level
(1)3A Burglary	(1)58 High Temp
(1)31 Perimeter	(1)59 Low Temp
(1)32 Interior	(1)61 Loss of Air Flow
(1)33 24 Hour	

Automatic Zone Alarm/Restoral

Zone Defenition	SIA Auto Rep Codes	Contact ID Alarm Auto Rep Codes	Contact ID Restore Auto Rep Codes
Delay 1	BA-ZZ/BH-ZZ	E(1)3A-ZZZ	R(1)3A-ZZZ
Delay 2	BA-ZZ/BH-ZZ	E(1)3A-ZZZ	R(1)3A-ZZZ
Instant	BA-ZZ/BH-ZZ	E(1)3A-ZZZ	R(1)3A-ZZZ
Interior	BA-ZZ/BH-ZZ	E(1)3A-ZZZ	R(1)3A-ZZZ
Interior Stay/Away	BA-ZZ/BH-ZZ	E(1)3A-ZZZ	R(1)3A-ZZZ
Delay Stay/Away	BA-ZZ/BH-ZZ	E(1)3A-ZZZ	R(1)3A-ZZZ
24 Hr Supervisory	US-ZZ/UR-ZZ	E(1)5A-ZZZ	R(1)5A-ZZZ
24 Hr Supervisory Buzzer	UA-ZZ/UH-ZZ	E(1)4A-ZZZ	R(1)4A-ZZZ
24 Hr Burg	BA-ZZ/BH-ZZ	E(1)3A-ZZZ	R(1)3A-ZZZ
24 Hr Gas	GA-ZZ/GH-ZZ	E(1)51-ZZZ	R(1)51-ZZZ
24 Hr Medical	MA-ZZ/MH-ZZ	E(1)AA-ZZZ	R(1)AA-ZZZ
24 Hr Panic	PA-ZZ/PH-ZZ	E(1)2A-ZZZ	R(1)2A-ZZZ
24 Hr Emergency (non-medical)	QA-ZZ/QH-ZZ	E(1)A1-ZZZ	R(1)A1-ZZZ
24 Hr Water	WA-ZZ/WH-ZZ	E(1)54-ZZZ	R(1)54-ZZZ
24 Hr Freeze	ZA-ZZ/ZH-ZZ	E(1)59-ZZZ	R(1)59-ZZZ
Interior Delay	BA-ZZ/BH-ZZ	E(1)3A-ZZZ	R(1)3A-ZZZ
Instant Stay/Away	BA-ZZ/BH-ZZ	E(1)3A-ZZZ	R(1)3A-ZZZ
24 Hr Non Latching Tamper	TA-ZZ/TR-ZZ	E(3)83-ZZZ	R(3)83-ZZZ
Day Zone	BA-ZZ/BH-ZZ	E(1)3A-ZZZ	R(1)3A-ZZZ
Night Zone	BA-ZZ/BH-ZZ	E(1)3A-ZZZ	R(1)3A-ZZZ
Delayed 24 Hr Fire (wireless)	FA-ZZ/FH-ZZ	E(1)1A-ZZZ	R(1)1A-ZZZ
Standard 24 Hr Fire (wireless)	FA-ZZ/FH-ZZ	E(1)1A-ZZZ	R(1)1A-ZZZ
24 Hr Auto-Verified Fire (wireless)	FA-ZZ/FH-ZZ	E(1)1A-ZZZ	R(1)1A-ZZZ
24 Hr CO Alarm	GA-ZZ/GH-ZZ	E(1)62-ZZZ	R(1)62-ZZZ
ZZ or ZZZ = Zones 01 to 34			

Appendix B: Communicator Format Options

The following format options are programmable in section [350]

01	**20 BPS, 1400 Hz handshake**
02	**20 BPS, 2300 Hz handshake**

- BPS Formats - 0 is not valid in Account or Rep Code (A must be used)

Depending on the pulse format selected the panel will communicate using the following: 3/1, 3/2, 4/1 or 4/2, 1400 or 2300 Hz handshake, 20 bits per second, non-extended.

The digit ‘0’ will send no pulses and is used as a filler. When programming account numbers enter four digits. When programming a three digit account number the fourth digit must be programmed as a plain ‘0’ which will act as a filler digit. If an account number has a ‘0’ in it, substitute a HEX digit ‘A’ for the ‘0’.

Examples:

- 3 digit account number [123]- program [1230]
- 3 digit account number [502] - program [5A20]
- 4 digit account number [4079] - program [4A79]

When programming reporting codes two digits must be entered. If one digit reporting codes are used, the second digit must be programmed as ‘0’. If ‘0’ is to be transmitted, substitute a HEX digit ‘A’ for the ‘0’.

Examples:

- 1 digit reporting code [3] - program [30]
- 2 digit reporting code [30] - program [3A]

To prevent the panel from reporting an event, program the reporting code for the event as [00] or [FF].

03	**DTMF Contact ID**

- **ADEMCO Contact ID - 0 is not valid in Account or Rep Code (A must be used, 10 in checksum)**

Contact ID is a specialized format that communicates information quickly using tones rather than pulses. The format also allows more information to be sent. For example, rather than reporting an alarm zone 1, the Contact ID format can also report the type of alarm, such as Entry/Exit alarm zone 1.

If **Contact ID Sends Automatic Reporting Codes** is selected, the panel automatically generates a reporting code for each event. These identifiers are listed in Appendix A. If the Automatic Contact ID option is not selected, reporting codes must be programmed. The 2-digit entry determines the type of alarm. The panel automatically generates all other information, including the zone number.

NOTE:If Automatic Contact ID is selected, the panel automatically generates all zone and access code numbers, eliminating the need to program these items.

NOTE:The zone number for Zone Low Battery and Zone Fault events will not be identified when Pulse formats are used.

If the **Contact ID uses Automatic Reporting Codes** option is enabled, the panel will operate as follows:

- If an event’s reporting code is programmed as [00], the panel will not attempt to call the central station.
- If the reporting code for an event is programmed as anything from [01] to [FF], the panel will automatically generate the zone or access code number. See Appendix A for a list of the codes which will be transmitted.

If the **Contact ID uses Programmed Reporting Codes** option is enabled, the panel will operate as follows:

- If an event’s reporting code is programmed as [00] or [FF], the panel will not attempt to call central station.
- If the reporting code for an event is programmed as anything from [01] to [FE], the panel will send the programmed reporting code.

Account numbers must be four digits:

- If the digit ‘0’ is in the account number substitute the HEX digit ‘A’ for the ‘0’.
- All reporting codes must be two digits.
- If the digit ‘0’ is in the reporting code substitute the HEX digit ‘A’ for the ‘0’.
- To prevent the panel from reporting an event, program the reporting code for the event as [00] or [FF].

See: Contact ID Sends Automatic Reporting Codes section [381], Option [7]

04	**SIA FSK**

- **SIA -0 is valid in Account or Rep Code (not 00 in a Reporting code)**
- **SIA -0 uses 300 Baud FSK as the communication media. Account Code can be 4 or 6 hexadecimal digits. Reporting codes must be 2 digits. The SIA format transmits a 4 (or 6) digit account code, 2 digit identifier code and 2 digit reporting code. The 2 digit identifier is pre programmed by the panel.**

SIA is a specialized format that communicates information quickly using frequency shift keying (FSK) rather than pulses. The SIA format automatically generates the type of signal being transmitted, such as Burglary, Fire, Panic etc. The two digit reporting code is used to identify the zone or access code number.

If the SIA format is selected the panel can be programmed to automatically generate all zone and access code numbers eliminating the need to program these items.

If the **SIA Sends Automatic Reporting Codes** option is enabled the panel will operate as follows:

1. If the reporting code for an event is programmed as [00] the panel will not attempt to call the central station.
2. If the reporting code for an event is programmed as anything from [01] to [FF] the panel will AUTOMATICALLY generate the zone or access code number.
3. During a partial closing, all bypassed zones are reported.

Communicator Call Direction Options can be used to disable reporting of events such as Openings/Closings. Also, if all the Opening/Closing reporting codes were programmed as [00] the panel would not report.

If the **SIA Sends Automatic Reporting Codes** option is disabled the panel operates as follows:

1. If the reporting code for an event is programmed as [00] or [FF] the panel will not attempt to call the central station.
2. If the reporting code for an event is programmed as anything from [01] to [FE] the panel will send the programmed reporting code.
3. During a partial closing, bypassed zones are not reported.

NOTE:The zone number for Zone Low Battery and Zone Fault events will not be identified when Programmed SIA is used.

See: SIA Sends Automatic Reporting Codes - Section [381], Option [3],
Communicator Call Direction Options - Section [351] to [376],
SIA Identifiers - Appendix A

06	**Residential Dial**

If Residential Dial is programmed and an event that is programmed to communicate occurs, the panel will seize the line and dial the appropriate telephone number(s). Once the dialing is complete, the panel will emit an ID tone and wait for a handshake (press a 1, 2, 4, 5, 7, 8, 0, ✱ or # key from any telephone). It will wait for this handshake for the duration of **Post Dial Wait for Handshake** timer. Once the panel receives the handshake, it will emit an alarm tone over the telephone line for 20 seconds. If several alarms occur at the same time, only one call will be made to each telephone number the panel is programmed to call.

Appendix C: 2-Way Audio Verification (PC5950)

Not approved for use with UL/ULC listed installations.

Audio Verification provides Talk and Listen-in capability for audio verification of alarms. This allows the central station to communicate with the occupants through the microphone and speaker of the alarm system. The commands indicated below are a subset of the **SIA Audio Verification Standard (November 11, 1997).**

The 2-way Audio Session

1. **Zone Violation:** A 2-way audio session begins with the violation of a zone that has zone attribute 9 enabled. By default, attribute 9 is enabled for zone types 10 and 20, indicating that they will initiate a 2-way audio session.
   By default the following do NOT initiate a 2-way session:
   • Fire Zones, zone 87, 88, 89 and the Fire Key
   • Supervisory zones, zones 9 and 10
   • 24 Hr. Freeze zone, zone 20

   By default one-way audio (Listen-in only) is initiated by the following:
   • Silent Panic events (Silent [P], Silent Panic zone)
   • Duress alarm
   • Silent zone alarm (Zone attribute 1 OFF)
   Note: The Speaker is always **OFF** during silent alarms.
2. **Communication to the Monitoring Station:** When an alarm is triggered one of the following reporting codes/actions is sent to the monitoring station:

Format	Reporting Code/Event
SIA	L90
Contact ID	606
BPS	Communicates the Event, then automatically enters into 2-way Audio mode

3. **Alerting the Operator:** When the reporting code is received by the monitoring station or a 2-way session is automatically initiated, a 2-way Initiation (Start) tone will be sounded to alert the operator. A high (1800 Hz) tone and a low (900 Hz) tone are used to generate the session tones listed below. Short tone duration is 100ms. Long tone duration is 1 second:

Two-way Initiation (Start) Tone:	
3 Hi Tones (Short)	After the third short hi tone has sounded, the system switches directly into Listen-in mode without a keypress from the monitoring station.
Reminder Tones:	
1 Hi Tone (Short)	1 short hi tone indicates 20 seconds are left in the audio session.
1 low Tone	1 short low tone indicates 10 seconds are left in the audio session.

4. **Initiating, Control and Termination of the Session:** The Operator controls the session by using the following Audio Control Telephone Key functions.To select the following commands, press [*][0] followed by the key number(s) indicated below:

Key	Command	Description
0	Future Use	
1	Hi-Gain Talk to Speaker	Connects the monitoring station to the speaker at the high volume output level.
2	VOX Mode	Connects the monitoring station to the system in VOX Mode (See VOX Support below).
3	Hi-Gain Listen to Microphone	Connects the monitoring station to the microphone at the high gain input level.
4	Lo-Gain Talk to Speaker	Connects the monitoring station to the speaker at the low volume output level.
5	Future Use	
6	Lo-Gain Listen to Microphone	Connects the monitoring station to the microphone at the low gain input level.
7	Extend Time	Restarts the session timer (90 seconds) to prevent time out. To extend the time and take no other action use this function. Pressing any key automatically extends the time.
88	Future Use	
99	Disconnect	Disconnects the session. The second ‘9’ must be pressed within 1 second of pressing the first ‘9’. Use the “Disconnect” key sequence before hanging up during a Talk / Listen-In session.

VOX Support: When in VOX mode the systemautomatically switches between the phone line and internal microphone/speaker depending on which one is loudest. Push-to-talk overrides VOX - this is performed by switching into Talk mode at the monitoring station.

Hang-up Auto-detection: The system automatically disconnects if the central station receiver disconnects before the operator picks up the line. 5 seconds of continuous dial tone or a busy tone is considered disconnect criteria.

Appendix D: Regulatory Approvals Information

North America

FCC COMPLIANCE STATEMENT

CAUTION: Changes or modifications not expressly approved by Digital Security Controls could void your authority to use this equipment.

This equipment has been tested and found to comply with the limits for a Class B digital device, pursuant to Part 15 of the FCC Rules. These limits are designed to provide reasonable protection against harmful interference in a residential installation. This equipment generates, uses and can radiate radio frequency energy and, if not installed and used in accordance with the instructions, may cause harmful interference to radio communications. However, there is no guarantee that interference will not occur in a particular installation. If this equipment does cause harmful interference to radio or television reception, which can be determined by turning the equipment off and on, the user is encouraged to try to correct the interference by one or more of the following measures:

- Re-orient the receiving antenna.
- Increase the separation between the equipment and receiver.
- Connect the equipment into an outlet on a circuit different from that to which the receiver is connected.
- Consult the dealer or an experienced radio/television technician for help.

The user may find the following booklet prepared by the FCC useful: “How to Identify and Resolve Radio/Television Interference Problems”. This booklet is available from the U.S. Government Printing Office, Washington D.C. 20402, Stock # 004-000-00345-4.

IMPORTANT INFORMATION

This equipment complies with Part 68 of the FCC Rules and, if the product was approved July 23, 2001 or later, the requirements adopted by the ACTA. On the side of this equipment is a label that contains, among other information, a product identifier. If requested, this number must be provided to the Telephone Company.

Product Identifier US:F53AL01B9155 USOC Jack:RJ-31X

Telephone Connection Requirements

A plug and jack used to connect this equipment to the premises wiring and telephone network must comply with the applicable FCC Part 68 rules and requirements adopted by the ACTA. A compliant telephone cord and modular plug is provided with this product. It is designed to be connected to a compatible modular jack that is also compliant. See installation instructions for details.

Ringer Equivalence Number (REN)

The REN is used to determine the number of devices that may be connected to a telephone line. Excessive RENs on a telephone line may result in the devices not ringing in response to an incoming call. In most but not all areas, the sum of RENs should not exceed five (5.0). To be certain of the number of devices that may be connected to a line, as determined by the total RENs, contact the local Telephone Company. For products approved after July 23, 2001, the REN for this product is part of the product identifier that has the format US: AAAEQ##TXXXX. The digits represented by ## are the REN without a decimal point (e.g., 03 is a REN of 0.3). For earlier products, the REN is separately shown on the label.

REN = 0.1B

Incidence of Harm

If this equipment (PC9155) causes harm to the telephone network, the telephone company will notify you in advance that temporary discontinuance of service may be required. But if advance notice is not practical, the telephone company will notify the customer as soon as possible. Also, you will be advised of your right to file a complaint with the FCC if you believe it is necessary.

Changes in Telephone Company Equipment or Facilities

The Telephone Company may make changes in its facilities, equipment, operations or procedures that could affect the operation of the equipment. If this happens the Telephone Company will provide advance notice in order for you to make necessary modifications to maintain uninterrupted service.

Equipment Maintenance Facility

If trouble is experienced with this equipment (PC9155) for repair or warranty information, contact the facility indicated below. If the equipment is causing harm to the telephone network, the Telephone Company may request that you disconnect the equipment until the problem is solved. This equipment is of a type that is not intended to be repaired by the end user.

DSC c/o APL Logistics 757 Douglas Hill Rd., Lithia Springs, GA 30122

Additional Information

Connection to party line service is subject to state tariffs. Contact the state public utility commission, public service commission or corporation commission for information.

Alarm dialing equipment must be able to seize the telephone line and place a call in an emergency situation. It must be able to do this even if other equipment (telephone, answering system, computer modem, etc.) already has the telephone line in use. To do so, alarm dialing equipment must be connected to a properly installed RJ-31X jack that is electrically in series with and ahead of all other equipment attached to the same telephone line. Proper installation is depicted in the figure below. If you have any questions concerning these instructions, you should consult your telephone company or a qualified installer about installing the RJ-31X jack and alarm diadialingling equipment for you.

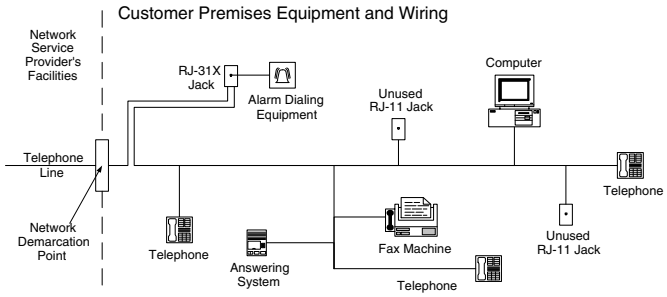

INDUSTRY CANADA STATEMENT

NOTICE: This product meets the applicable Industry Canada technical specifications.
Le présent materiel est conforme aux specifications techniques applicables d’Industrie Canada.

The Ringer Equivalence Number (REN) for this terminal equipment is 0.1. L'indice d'équivalence de la sonnerie (IES) du présent matériel est de 0.1.

The Ringer Equivalence Number is an indication of the maximum number of devices allowed to be connected to a telephone interface. The termination on an interface may consist of any combination of devices subject only to the requirement that the sum of the RENs of all the devices does not exceed five.

L’indice d’équivalence de la sonnerie
(IES) sert à indiquer le nombre maximal de terminaux qui peuvent être raccordés à une interface téléphonique. La terminaison d’une interface peut consister en une combinaison quelconque de dispositifs, à la seule condition que la somme d’indices d’équivalence de la sonnerie de tous les dispositifs n’excède pas 5.

The term “IC:” before the radio certification number only signifies that Industry Canada technical specifications were met.

Certification Number IC: 160A-PC9155

This Class B digital apparatus complies with Canadian ICES-003.
Cet appareil numérique de la classe B est conforme à la norme NMB-003 du Canada.

This product has been tested and found in compliance with the following standards:

UL1023 Household Burglar-Alarm System Units
UL985 Household Fire Warning System Units
UL1635 Digital Alarm Communicator System Units
ULC-S545-02Residential Fire Warning System Control Units
ORD-C1023-1974Household Burglar-Alarm System Units

This product has also been tested and found in compliance with the ANSI/SIA CP-01-2007 Control Panel Standard – Features for False Alarm Reduction.

This product is UL/ULC listed under the following categories:

UTOU/UTOUC Control Units and Accessories, Household System Type
NBSX/NBSXC Household Burglar Alarm System Units
AMTB Control Panels, SIA False Alarm Reduction

The product is labeled with the UL and ULC listing marks along with the SIA CP-01 compliance statement (Also Classified in accordance with SIA-CP-01 Standard) as proof of compliance with the above mentioned standards. For further information on this product's listings please also refer to the official listing guides published at the UL web site (www.ul.com) under Certifications section.

UL/ULC Residential Fire and Burglary Installations:

For ULC Installations refer to the Standard for the Installation of Residential Fire Warning Systems, CAN/ULC-S540.

- All burglary-type zones shall be configured with SEOL or DEOL configuration
  (refer to section [133] and [134], bit 15 or 16 shall be ON)
- Use at least one WS4916 Smoke Detector for Fire Installations (refer to section [001], fire zone shall be programmed as type 89)
- The entry delay shall not exceed 60 seconds (refer to section [005])
- The exit delay shall not exceed 120 seconds (refer to section [005])
- The minimum Bell Time-out is 4 minutes (refer to section [005])
  Note: For ULC Residential Fire Installations the minimum Bell Time-out is 5 minutes
- Temporal Three Fire Signal shall be enabled (refer to section [013], option 8 shall be ON)
- Arm/Disarm Bell Squawk shall be enabled when using wireless key WS4939 (refer to section [014], option 1 shall be ON)
- A code shall be required for bypassing (refer to section [015], option 5 shall be ON)
- Trouble beeps shall be enabled (refer to section [023], option 7 shall be ON)
- AC trouble indication LED shall be enabled (refer to Keypad Programming, section [075], options 5 and 6 shall be ON)
- DACT Communicator shall be enabled for Supervising Station Monitoring (refer to section [380], option 1 shall be ON).
  Note: The DACT communicator for this product has no line security.
- Telephone Line Monitoring (TLM) shall be enabled (refer to section [015], option 7 shall be ON)
  Note: This product is programmed to perform 5 attempts for communication of an event to the supervising station. If unsuccessful, a Fail To Communicate (FTC) trouble is generated.
- Test transmission cycle shall be set for monthly transmission (refer to section [377])
  Note: For ULC Residential installations set for daily test transmission
- Wireless Supervision window shall be enabled (refer to Wireless Programming, sections [082] to [085])
- Wireless Supervision window shall be set to 4h for Fire Installations (refer to Wireless Programming, section [081][1] shall be programmed with the value [016].
- Wireless Supervision window shall be set to 24h for Burglary Installations only (refer to Wireless Programming, section [081] shall be programmed with the value [096]
- RF Jam detection shall be enabled (refer to Wireless Programming, section [900], option 7 shall be OFF)
- Alarm Verification shall not be used in initiating device circuits intended for cross zone operation.

Programming

The notes in the programming sections describing the system configurations for UL/ULC listed installations shall be implemented.

Bell Location

The alarm sounding device (bell) shall be located where it can be heard by the person operating the security system during the daily arming and disarming cycle.

Casual Users

The installer should caution the user(s) not to give system information (e.g., codes, bypass methods, etc.) to casual users (baby-sitters or service people). Only the One-Time Use codes should be given to casual users.

User Information

The installer should advise the users and note in the User's Manual:

- Service organization name and telephone number
- The programmed exit time
- The programmed entry time
- Test system weekly
- The Installer's code can not arm or disarm the system.
- The installer shall test the communication formats at least once per year.

Note: When the control panel is used in conjunction with the TL265GS or GS2065 module and heartbeat supervision is enabled (200 second supervision window at supervising station) the system is also rated for standard line security or encrypted line security (if the encryption is enabled). Refer to TL265GS and GS2065 Installation Guide for additonal details.

SIA False Alarm Reduction Installations

For a list of the defaults value programmed when the unit is shipped from the factory and for any other programming information refer to table below.

Caution: Call Waiting Cancel (section [382], Option 4) feature on a non-Call Waiting line will prevent successful communication to the supervising station.
Fire Alarm Verification feature (Auto Verified Fire Zone type [89]) is supported on the DSC Wireless Smoke Detector, Model WS4916. The fire alarm delay is 40s.

Notes: Programming at installation may be subordinate to other UL requirements for the intended application
Cross zones have the ability to individually protect the intended area (e.g., motion detectors which overlap)
Cross zoning is not recommended for line security Installations nor is it to be implemented on exit/entry zones.
This pannel has a communication delay of 30 seconds. The delay can be removed or it can be increased up to 45 seconds at the request of the end user in consultation with the installer.
Do not duplicate any reporting codes. This applies to all communication formats other than SIA or CID sending automatic programmed reporting codes.
The security system shall be installed with the sounding device activated and the communicator enabled for transmission using SIA or CID format.

SIA Feature Programming Section	Comments	Range/Default	Requirement
Exit Time [005], 3rd entry	Access to entry and exit delays and bell time out for the system	**Range:**45- 255 seconds **Default:** 60 sec.	Required (programma-ble)
Progress Annunciation/ Disable - for Silent Exit [014], Option 6 ON	Enables audible exit beeps from the keypad for the duration of exit delay	Keypads may be disabled **Default:** Enabled	Allowed
Exit Delay Restart Enabled [016], Option 2 ON	Enables the exit delay restart feature	**Default:** Enabled	Required
Auto Stay Arm on Unvacated Premises [001]-[002] Zone type 05, 06, 32	Function Key: Stay Arming. All Stay/Away type zones (05, 06) and Instant Stay/Away zones (32) will be automatically bypassed	If no exit after full arm **Default:** Enabled	Required
Exit Time and Progress Annunciation/Disable or Remote Arming [005] and [014] bit 6	System times and audible exit beeps can be disabled when using the wireless key to Away Arm the system	**Default:** Enabled	Allowed
Entry delay(s) [005], 1st and 2nd entry	Access to entry and exit delays and bell time out for the system **Note:** Combined entry delay and communications delay (Abort window) shall not exceed 60s	**Range:** 30 sec. to 4 min. **Default:** 30 sec.	Required (programma-ble)
Abort Window for Non-Fire zones [101]-[134] bit 7 ON	Access to zone attributes, i.e., swinger shutdown, transmission delay and cross zone. Individual zones attribute bit 7 (Transmission delay) is by default ON	May be disabled by zone or zone type **Default:** Enabled	Required
Abort Window - for Non-Fire zones [377], 4th entry	Access to the programmable delay before communicating alarms **Note:** Combined entry delay and communications delay (Abort window) shall not exceed 60s	**Range:** 15 - 45 sec. **Default:** 30 sec.	Required (programma-ble)
Abort Annunciation [382], Option 3 ON	Enables the “Communication Cancelled” message display on keypad	Annunciate that no alarm was transmitted **Default:** Enabled	Required
Cancel Annunciation [328], 8th entry	Access to the reporting code for alarm cancelled	Annunciate that a Cancel was transmitted **Default:** Enabled	Required
Duress Feature [*][5] Master Code Option 2 ON	Do not derive code from an existing Master/User code (e.g., Master code is 1234, the duress code should not be 1233 or 1235)	No 1+/- derivative of another user code. No duplicates with other user codes **Default:** disabled	Allowed
Cross Zoning [016] Option 1 [101]-[134] bit 8 OFF	This option enables cross zoning for the entire system. Individual zones can be enabled for cross zoning via zone attribute bit 8 in sections [101] - [134]	Programming required **Default:** Disabled	Required
Cross Zone Timer [176]	Access to the programmable cross zone timer	May program Range: 001-255 sec./min. **Default:** 60 seconds	Allowed
Swinger Shutdown for Alarms [377] 1st entry	Access to the swinger shutdown limit for zone alarms	For all non-fire zones shut down at 1 or 2 trips **Default:** 1 Trip	Required (programma-ble)
Swinger Shutdown Enable [101] - [134] bit 6 ON	Access to zone attributes, i.e., swinger shutdown, transmission delay and cross zone. Individual zones attribute bit 6 (Swinger Shutdown enabled) is by default ON	For non-police response zones **Default:** Enabled	Allowed
24-Hr. Auto-verified Fire (Wireless) Zone type [89]	Access to 24-Hr. Auto-verified fire (wireless)	Activates If a restoral is Not received within the specified time **Default:** disabled	Required
Call Waiting Cancel Dial String [304], [382], Option 4 OFF	Access to the dialing sequence used to disable call waiting	Dependant on user phone line **Default:** disabled	Required

Testing

System Test: [*][6] Master Code, Option 4	The system activates all keypad sounders, bells or sirens for 2 seconds and all keypad lights turn on. Refer to the *User Manual (part no. 29007326).*
Walk Test Mode: [*][6] Opt 8	This mode is used to test each zone on the system for proper functionality.

Europe

This product is in conformity with:

EMC Directive 2004/108/EC based on results using harmonized standards in accordance with article 10(5),

R&TTE Directive 1999/5/EC based on following Annex III of the directive and

LVD Directive 99/5/EC based on results using harmonized standards.

The product is labeled with the CE mark as proof of compliance with the above mentioned European Directives. Also a CE declaration of conformity (DoC) for this product can be found at www.dsc.com under Agency Listings section.

DSC erklærer herved at denne komponenten overholder alle viktige krav samt andre bestemmelser gitt i direktiv 1999/5/EC.

Por este meio, a DSC, declara que este equipamento está em conformidade com os requisitos essenciais e outras determinações relevantes da Directiva 1999/5/EC.

"DSC bekräftar härmed att denna apparat uppfyller de väsentliga kraven och andra relevanta bestämmelser i Direktivet 1999/5/EC".

Con la presente la Digital Security Controls dichiara che questo prodotto è conforme ai requisiti essenziali ed altre disposizioni rilevanti relative alla Direttiva 1999/05/CE.

Por la presente, DSC declara que este equipo está en conformidad con los requisitos esenciales y otros requisitos relevantes de la Directiva 1999/5/EC.

Hierdurch erklärt DSC, daβ dieses Gerät den erforderlichen Bedingungen und Vorrausetzungen der Richtlinie 1999/5/EC entspricht.

'Δία του παρόντος, η DSC, δηλώνει ότι αυτή η συσκευή είναι σύμφωνη με τις ουσιώδης απαιτήσεις και με όλες τις άλλες σχετικές αναφορές της Οδηγίας 1999/5/EC'.

Hierbij verklaart DSC dat dit toestel in overeenstemming is met de eisen en bepalingen van richtlijn 1999/5/EC.

Par la présente, DSC déclare que cet article est conforme aux éxigences essentielles et autres relevantes stipulations de la directive 1999/5/EC.

DSC vakuuttaa laitteen täyttävän direktiivin 1999/5/EC olennaiset vaatimukset.

Hereby, DSC, declares that this device is in compliance with the essential requirements and other relevant provisions of Directive 1999/5/EC.

The complete R&TTE Declaration of Conformity can be found at http://www.dsc.com/listings_index.aspx.

© 2009, Digital Security Controls
Technical Support: 1-800-387-3630 (Can/US)
905-760-3000 (Intl.) **www.dsc.com**
Printed in Canada

29007510R003