PowerSeries Neo HS2016/HS2032/ HS2064/HS2128 Alarm Controller Reference Manual

29009812R005

Contents

Safety Instructions for Service Personnel..... 13
Introduction..... 15
About the System..... 15
Features..... 15
Zones, Wireless Keypads, Wireless Keys, Panic Pendants and Proximity Tags..... 15
Access codes..... 16
Programmable Outputs (PGMs)..... 16
System Supervision Features..... 16
Additional Features..... 16
Available Models..... 16
Model Differences..... 17
Compatible Devices..... 18
Introduction..... 20
Installation..... 20
Overview of Installation Process..... 20
Alarm Controller Installation..... 21
Mounting the Enclosure..... 21
Wiring..... 22
Terminal Descriptions..... 22
Wire Routing for Power & Non-Power Limited..... 22
Corbus Wiring..... 24
Installing Modules..... 27
Zone Expander..... 27
Output Expander..... 28
Wireless Transceiver Module..... 28
Power Supply Wiring..... 29
Keypad Wiring..... 29
HSM2955 Wiring..... 30
Alternate Communicator Wiring..... 30
Zone Wiring..... 30
PGM Wiring..... 33
Bell Wiring..... 33
Telephone Line Wiring..... 33
Smoke Detector Wiring..... 34
CO Detector..... 35
Ground Wiring..... 37
Connecting Power..... 37
Configuration..... 38
Basic Configuration Steps..... 38
Using the Keypad..... 39
Special Keys..... 39
LED Indicators..... 39

Enrollment ... 40
Enrolling Modules ... 41
Module Supervision ... 41
Enroll Wireless Devices ... 42
Working with Partitions ... 42
Setting Up a Partition ... 43
Bell/Siren Operation ... 43
Interconnected Smoke Detector Operation ... 43
Trouble Indicators ... 43
Keypad Partition Setup ... 44
Loaned Partition Setup ... 44
Global Zones ... 44
Fire and CO Zone Types ... 44
Bell/PGM Support ... 45
Communications ... 45
Assign Zones ... 45
Assign Users ... 45
Factory Defaults ... 45
Alternate Communicator Setup ... 46
Real Time Clock ... 46
Communication Paths ... 46
Communications Options ... 47
Communication Attempt Limit ... 47
Supervision Restore ... 47
Remote Firmware Upgrade ... 47
Local Firmware Upgrade ... 48
Testing the System ... 48
Installer Walk Test ... 48
Viewing the Event Buffer ... 48
System Operation ... 48
Arming and Disarming ... 48
Partition vs. Global Keypad ... 49
Single Partition Operation ... 49
Global/Multiple Partition Operation ... 49
Labels ... 50
System Label ... 50
Zone Labels ... 50
Partition Labels ... 50
Module Labels ... 50
Event Labels ... 51
Partition Command Output Labels ... 51
Annunciation ... 51

Door Chime..... 51
Temperature Display..... 51
Low Temperature Warning..... 52
Keypad Function Keys..... 52
Function Key Definitions..... 52
[00] Null Function Key..... 52
[02] Instant Stay Arm..... 53
[03] Stay Arm..... 53
[04] Away Arm..... 53
[05] No-Entry Arm [*][9]..... 53
[06] Chime On/Off..... 53
[07] System Test..... 53
[09] Night Arm..... 53
[12] Global Stay Arm..... 53
[13] Global Away Arm..... 53
[14] Global Disarming..... 53
[16] Quick Exit..... 54
[17] Arm Interior..... 54
[21]-[24] Command Output 1 to 4..... 54
[29] Bypass Group Recall..... 54
[31] Local PGM Activate..... 54
[32] Bypass Mode..... 54
[33] Bypass Recall..... 54
[34] User Programming..... 54
[35] User Functions..... 55
[37] Time & Date Program..... 55
[39] Trouble Display..... 55
[40] Alarm Memory..... 55
[61]-[68] Partition 1 to 8 Select..... 55
Language Selection..... 55
[*] Commands..... 56
[*][1] Bypass or Stay/Away/Night Zones..... 56
When The Alarm System is Disarmed..... 56
Bypassing zones with an LCD keypad:..... 56
Bypassing zones with a LED/ICON keypad:..... 57
Other Bypass Features:..... 57
When The Alarm System is Armed..... 57
Troubleshooting..... 58
[*][2] Trouble Display..... 58
[*][3] Alarm Memory Display..... 61
[*][4] Door Chime Enable/Disable..... 61
[*][5] Program Access Codes..... 61
Assign Access Codes..... 61

Access code types.... 62
To add an access code using an LCD keypad:.... 63
On an LED/ICON keypad:.... 63
Access Code Attributes.... 63
Add User Labels.... 65
Assigning Proximity Tags.... 65
Assigning Users to Partitions.... 65
User Authentication Options.... 66
[*][6] User Functions.... 66
Event Buffer.... 66
System Test.... 66
Time and Date.... 67
Auto-Arm/Disarm.... 67
Auto-Arm Time.... 67
Enable DLS/Allow System Service.... 68
User Call-up.... 68
User Walk Test.... 68
Late to Open.... 68
Late to Open Time.... 69
SMS Programming.... 69
Brightness Control.... 69
Contrast Control.... 69
Buzzer Control.... 69
Authorize Firmware Update.... 69
Interactive Services.... 70
[*][7] Command Outputs 1-4.... 70
[*][8] Installer Programming.... 70
[*][9] No-Entry Arming.... 71
[*][0] Quick Arm/Exit.... 71
When disarmed:.... 71
When armed:.... 71
SMS Command and Control.... 71
SMS Command and Control Functions.... 71
Visual Verification.... 72
System Operation.... 72
Programming.... 72
How to Program.... 72
Programming Methods.... 72
Template Programming.... 73
DLS Programming.... 74
Local Programming With PC-Link.... 74
Remote Programming.... 75
Installer Programming.... 75

Viewing Programming ... 75
Keypad Types ... 75
Programming Hex and Decimal Data ... 76
Programming Descriptions ... 77
Adding Labels ... 77
[000] Label Programming ... 77
[000] Language Selection ... 78
[001]-[128] Zone Labels ... 78
[051] Zone Tamper Label ... 79
[052] Zone Fault Label ... 79
[064] CO Alarm Message ... 79
[065] Fire Alarm Message ... 80
[066] Fail To Arm Event Message ... 80
[067] Alarm When Armed Event Message ... 80
[100] System Label ... 80
[101]-[108] Partition 1-8 Labels ... 80
[201]-[208][001]-[004] Partition Command Output Labels ... 80
[601]-[604] Schedule Labels ... 80
[801] Keypad Labels ... 80
[802][001]-[015] HSM2108 Zone Expander Labels ... 80
[803][001]-[016] HSM2208 Output Expander Label ... 80
[806] HSM2HOSTx Label ... 80
[808] HSM2955 Label ... 81
[809][001]-[004] HS2300 Power Supply Label ... 81
[810][001]-[004] HS2204 High-Current Output Supply Label ... 81
[815] Alternate Communicator Label ... 81
[820][001]-[016] Siren Labels ... 81
[821][001]-[008] Repeater Labels ... 81
[999][Installer Code][999] Default Labels ... 81
Zone Setup ... 81
[001] AssignZone Types ... 81
[002] Zone Attributes ... 88
Assign zone attributes: ... 88
System Times ... 90
[000] – System Area ... 90
[001]-[008] Partition 1-8 Timers ... 91
[900] – Bell Delay Partition Mask ... 91
[901]/[902] – Daylight Savings Begin/End ... 91
Access Codes ... 92
[006] Installer Defined Access Codes ... 92
[007] - [008] PGM Configuration ... 92
[007] PGM Programming ... 93
[008] PGM Timer Programming ... 93

[009] PGM Types..... 93
[001]-[164] Select PGM..... 93
100 - Null PGM..... 93
101 - Burglary and Fire Bell Follower..... 93
102 - Delayed Fire and Burglary..... 94
103 - Sensor Reset [*][7][2]..... 94
104 - 2-Wire Smoke..... 94
109 - Courtesy Pulse..... 94
111 - Keypad Buzzer Follow..... 95
114 - Ready to Arm..... 95
115 - System Armed Status..... 95
116 - Away Armed Status..... 95
117 - Stay Armed Status..... 95
120 - Away Armed with No Zone Bypasses Status..... 95
121-124 – Command Outputs 1-4..... 95
129 - Partition Status Alarm Memory..... 95
132 - Holdup Output..... 96
134 - 24-Hour Silent Input (PGM 2)..... 96
132 - 24-Hour Audible Input (PGM 2)..... 96
146 - TLM and Alarm..... 96
147 - Kissoff..... 97
148 - Ground Start..... 97
149 - Alternate Communicator..... 97
155 - System Trouble..... 97
156 - Latched System Event (Strobe)..... 98
157 - System Tamper..... 98
161 - DC Trouble..... 99
165 - Proximity Tag Used..... 99
166 - Partition Prox Used..... 99
175 - Bell Status and Programming Access Output..... 99
176 - Remote Operation..... 99
184 - Open After Alarm..... 99
200 - Zone Follower - PGM By Zone..... 99
201-216 – Zone Follower (Zones 1-128)..... 100
[010] PGM Attributes..... 100
[000] Main Bell Mask..... 100
[001]-[164] PGM 001-164 Attributes..... 101
[011] PGM Configuration Options..... 110
[001]-[164] Select PGM..... 110
Zone Follow PGM By Zone..... 110
Proximity Tag Used..... 111
Command Output 1-4..... 111
[012] System Lockout..... 111
Keypad Lockout – Number of Invalid Local Attempts..... 111

Keypad Lockout Duration..... 111
Remote Lockout DLS..... 111
Remote Lockout Duration..... 111
System Options..... 111
[013] System Option 1..... 111
[014] System Option 2..... 113
[015] System Option 3..... 114
[016] System Option 4..... 115
[017] System Option 5..... 116
[018] System Option 6..... 117
[019] System Option 7..... 118
[020] System Option 8..... 119
[021] System Option 9..... 121
[022] System Option 10..... 122
[023] System Option 11..... 123
[024] System Option 12..... 124
[025] System Option 13..... 125
[040] User Authentication..... 126
[041] Access Code Digits..... 126
[042] Verified Events..... 127
Partition Setup..... 127
[151]-[158] Partition Auto-Arm/Disarm..... 127
[200] Partition Mask..... 128
[201]-[208] Partition Zone Assignment..... 129
[300] Panel/Receiver Communication Paths..... 129
[301] Phone Number Programming..... 130
[304] Call Waiting Cancel String..... 130
Reporting..... 131
[307] Zone Reporting..... 131
[308] Event Reporting..... 131
System Communications..... 138
[309] System Call Direction..... 138
[310] Account Codes..... 139
[311]-[318] Partition Call Directions..... 139
[350] Communicator Formats..... 140
[377] Communication Variables..... 140
[380] Communicator Option 1..... 142
[381] Communicator Option 2..... 144
[382] Communicator Option 3..... 145
[383] Communicator Option 4..... 145
[384] Communicator Backup Options..... 146
[385] Audio Module Talk\Listen Mask..... 146
DLS Programming..... 147
[401] DLS/SA Options..... 147

[402] PSTN DLS Phone Number Programming..... 148
[403] DLS Access Code..... 148
[404] DLS/SA Panel ID..... 148
[405] PSTN Double Call Timer..... 148
[406] PSTN Number of Rings to Answer On..... 148
[407] SA Access Code..... 149
[410] Automatic DLS/SA Options..... 149
Virtual Inputs..... 150
[560][001]-[032]..... 150
Schedule Programming..... 150
[601]-[604] Programming Schedule 1-4..... 150
[711]-[714] Holiday Schedules..... 150
[802] Audio Verification Module Programming..... 151
Wireless Programming..... 151
[804] Wireless Programming..... 151
[850] Cellular Signal Strength..... 151
[851] Alternate Communicator Programming..... 151
[860] Display Keypad Slot Number..... 152
[861]-[876] Keypad Programming..... 152
[899] Template Programming..... 152
Systems Information..... 152
[900] System Information..... 152
[901] Installer Walk Test Mode Enable/Disable..... 153
Module Programming..... 153
[902] Add/Remove Modules..... 153
Deleting Modules..... 154
[903] Confirm Module..... 155
Testing..... 156
[904] Wireless Placement Test..... 156
[912] Soak Test..... 157
[982] Battery Settings..... 157
Defaults..... 158
[989] Default Master Code..... 158
[990] Installer Lockout Enable/Disable..... 158
[991] Default Keypads..... 158
[993] Default Alternate Communicator..... 158
[996] Default Wireless Receiver..... 158
[998] Default HSM2955..... 158
[999] Default System..... 158
Programming..... 159
Programming Worksheets..... 159
Label Programming..... 159
Zone Setup..... 163

Zone Attribute Defaults..... 165
System Times..... 167
Access Codes..... 169
PGM Programming..... 169
System Lockout..... 180
System Options..... 181
Auto-Arm / Disarm..... 185
Partition and Zone Assignment..... 189
Communications..... 191
Call Directions..... 203
DLS Programming..... 206
Virtual Inputs..... 207
Schedule Programming..... 207
Audio Module Programming..... 212
Wireless Programming..... 216
Alternate Communicators..... 217
Keypad Programming..... 217
Template Programming..... 219
System information..... 219
Module Programming..... 219
Wireless Placement Testing..... 221
Testing..... 221
Battery Settings..... 222
Restoring Factory Defaults..... 222
Programming Worksheets..... 222
Troubleshooting..... 222
Testing..... 222
Troubleshooting..... 223
[*][2] Trouble summary..... 223
Reporting Codes..... 232
Word library..... 244
Template programming tables..... 245
Digit 1 – Zones 1-8 Definition Options..... 245
Digit 2 – System EOL Configuration Options..... 245
Digit 3 – Reporting Code Communication Options..... 246
Digit 4 – Reporting Code Configuration Options..... 247
Common Group..... 248
Digit 5 - DLS Connection Options..... 251
ASCII Characters..... 252
Wiring diagrams..... 252
HS2016, HS2032, HS2064, HS2128 UL/ULC Wiring Diagram..... 253

Zone Wiring.... 254
Bell Wiring.... 254
PGM Wiring.... 255
Telephone line wiring.... 255
Neo Reference Manual Feature Changes.... 256
Regulatory Approvals.... 258
Regulatory Approvals.... 258
Regulatory Approvals.... 258
ISED STATEMENT.... 260
UL/ULC Installations.... 260
UL/ULC Residential Fire and Burglary Installations:.... 261
ULC Commercial Burglary.... 263
UL Central Station and Police Connect with Standard or Encrypted Line Security Service.... 263
UL Local, Central Station, Police Connect with No Line Security Service.... 263
UL Home Health Care Signaling Equipment.... 264
ULC Central Station Fire and Burglary Monitoring Installations.... 264
Programming.... 264
Control of the Protected Premises.... 264
Bell Location.... 264
Protection of the Control Unit.... 264
Casual Users.... 265
User Information.... 265
Aux Loading and Battery Selection.... 265
SIA False Alarm Reduction Installations: Quick Reference.... 266
SIA quick reference table.... 267
EU Compliance Statement.... 270
Important Notes for EN50131-1 compliant systems.... 271
Australia / New Zealand Regulatory Compliance.... 271
New Zealand Telepermit Grant.... 272
UK Compliance Statement.... 272
Specifications For EN50131.... 273
Specifications.... 273
Locating Detectors and Escape Plan.... 276
Limited Warranty.... 279
Software Product License (EULA).... 283

Safety Instructions for Service Personnel

When using equipment connected to the telephone network, always follow the basic safety instructions provided with this product. Inform the end-user of the safety precautions that must be observed when operating this equipment.

Before Installing The Equipment

Ensure your package includes the following items:

- HS2016-4/HS2016/2032/2064/2128 alarm controller
- Power supply, direct plug-in
- Installation and user guides, including the safety instructions

Selecting A Suitable Location For The Alarm Controller

Refer to the following list to find a suitable location to install this equipment:

- Locate near a telephone socket and power outlet.
- Select a location free from vibration and shock.
- Place alarm controller on a flat, stable surface and follow the installation instructions.
- Do not locate the equipment where people may walk on the secondary circuit cable(s).
- Do not connect alarm controller to the same electrical circuit as large appliances.
- Do not select a location that exposes your alarm controller to direct sunlight, excessive heat, moisture, vapors, chemicals or dust.
- Do not install this equipment near water (e.g., bathtub, kitchen/laundry sink, wet basement, near a swimming pool).
- Do not install this equipment and accessories in areas where risk of explosion exists.
- Do not connect this equipment to electrical outlets controlled by wall switches or automatic timers.
- Avoid interference sources.
- Avoid installing equipment near heaters, air conditioners, ventilators, and refrigerators.
- Avoid locating equipment close to or on top of large metal objects (e.g., wall studs).

for information on locating smoke and CO detectors.

Safety Precautions Required During Installation

- Never install this equipment and/or telephone wiring during a lightning storm.
- Never touch uninsulated telephone wires or terminals unless the telephone line has been disconnected at the network interface.
- Position cables so that accidents can not occur. Connected cables must not be subject to excessive mechanical strain.
- Use only the power supply provided with this equipment. Use of unauthorized power supplies may cause damage.
- For direct plug-in versions, use the power supply provided with the device.

⚠ **WARNING:** This equipment has no mains on/off switch. The plug of the direct plug-in power supply is intended to serve as the disconnecting device if the equipment must be quickly disconnected. It is imperative that access to the mains plug and associated mains socket/ outlet is never obstructed.

IMPORTANT NOTES

- This equipment is stationary-fixed with a direct plug-in external transformer or a permanently connected internal transformer dependent on the region. It must be installed by Skilled Persons only (Skilled Person is defined as a person with relevant education or experience to enable him or her to identify hazards and to take appropriate actions to reduce the risks of injury to themselves and others). It must be installed and used within an environment that provides the pollution degree max 2, over voltages category II, in non-hazardous, indoor locations only.
- For permanently connected versions, the fuse in the power connector serves as the disconnecting device. The disconnect device will only remove the mains power and will not disconnect battery power. The installer is responsible to ensure that a readily accessible mains disconnect device is incorporated in the building for permanently connected installations.
- There are no end user replaceable parts within this equipment.
- Before servicing, disconnect the mains power, battery and telephone connections.
- The equipment enclosure must be secured to the building structure before operation.
- All national wiring rules must be observed.

Ensure that cables are positioned so that accidents cannot occur.

- Internal wiring must be routed in a manner that prevents
  - - Excessive strain or loosening of wire on terminal connections;

    - Damage of conductor or insulation.
- The wiring (cables) used for installation of the alarm system and accessories shall be insulated with PVC, TFE, PTFE, FEP, Neoprene or Polyamide.
- Do not route any wiring over circuit boards
- Disposal of used batteries must be made in accordance with local waste recovery and recycling regulations.
- Use authorized accessories only with this equipment.
- Do not place any object on the top of the cabinet.
- Do not spill any liquids on the cabinet.
- Do not touch the equipment and its connected cables during an electrical storm; there may be a risk of electric shock.
- Save these safety instructions for future use.
- These safety instructions should not prevent you from contacting the distributor and/or the manufacturer to obtain any further clarification and/or answers to your concerns.

Introduction

About the System

The PowerSeries Neo alarm panel is a feature-rich, scalable alarm system designed for residential and light commercial use. The alarm panel supports both hardwired and wireless devices. This section lists the features of the alarm panel, available models, and compatible devices.

The following symbols are used to indicate features or methods of operation that are only available in a particular market. No symbol indicates the feature or operation is available for all markets unless noted specifically otherwise.

CP-01 - North America

EN - Europe

NFA2P - France

UK - United Kingdom

Features

The following features are available on the PowerSeries Neo alarm controller.

Zones, Wireless Keypads, Wireless Keys, Panic Pendants and Proximity Tags

- 16, 32, 64, or 128 wireless or hardwired zones supported, including 6 or 8 hardwired zones available on the controller.
- zone types and 14 programmable zone attributes
- Up to 16 separate wireless keypads supported
- Up to 32 separate wireless keys or supported
- Up to 94 separate proximity tags supported

Access codes

- Up to 1002 access codes: 1000 (level 2-EN) including one system master code (level 3-EN). In addition, one installer code (level 3-EN), and one maintenance code are available.

ⓘ **Note:** EN50131-1 compliant systems using 1000 access codes shall set the access code to 8 digits (section [041], option 02).

- Programmable attributes for each user code - See Access Code Attributes.

Programmable Outputs (PGMs)

- Up to 4 programmable outputs (PGM) on the alarm controller with 49 available options
- 22, 38, 80, 148 maximum programmable outputs

System Supervision Features

The PowerSeries Neo system continuously monitors a number of possible trouble conditions and provides audible and visual indication at the keypad. Trouble conditions include:

- AC power failure
- Zone trouble
- Fire trouble
- Telephone line trouble
- Communicator trouble
- Low battery condition
- RF jam
- AUX power supply fault
- Failure to communicate
- Module fault (supervisory or tamper)

Additional Features

- 2-way wireless device support
- Visual verification (images + audio)
- Proximity tag support
- PGM scheduling
- Quick arming
- User, partition, module, zone and system labels
- Programmable system loop response
- Keypad and panel software versions viewable through keypad
- Doorbell zone type
- Low battery PGM type

Available Models

The following alarm controller models are available:

- HS2016-4
- HS2016

- HS2032
- HS2064
- HS2064 E
- HS2128
- HS2128 E

ⓘ **Note:** Not all models are available in all markets.

Model Differences

The table below lists the features of each alarm system model.

Table 1: Model Differences

Features	HS2128 E	HS2128	HS2064 E	HS2064	HS2032	HS2016	HS2016-4
Hardwired zones	128	128	64	64	32	16	16
Onboard zone inputs	8	8	8	8	8	6	8
Wireless zones	128	128	64	64	32	16	32
Partitions	8	8	8	8	4	2	8
Users	1000	95	500	95	72	48	48
Onboard outputs	4	4	4	4	2	2	4
Max outputs	148	148	80	80	38	22	24
Keypads	16	16	8	8	8	8	8
Wireless keys	32	32	32	32	32	16	16
Wireless sirens	16	16	8	8	8	4	4
Wireless repeaters *	8	8	8	8	8	4	4
Proximity tags	999	94	499	94	71	47	47
Alt Comm. phone #’s	4	4	4	4	4	4	4
User-programmable phone #’s	8	8	8	8	8	8	8
Event buffer	1000	1000	500	500	500	500	500
8-zone expander HSM2108	15	15	7	7	3	1	1
Power supply HSM2300	4	4	3	3	3	3	3
Power supply/ high-current output expander HSM2204	4	4	3	3	1	1	1
8-output expander HSM2208	16	16	8	8	4	2	2
2- way wireless integration module	1	1	1	1	1	1	1
Audio verification module HSM2955	1	1	1	1	1	1	1

*For UL installations, 2 repeaters must be installed for proper signal routing.

*The "E" reference next to the model name HS2128 or HS2064 is an order code reference. Model HS2016-4 is not UL/ULC listed.

Compatible Devices

The following devices are compatible with this alarm controller.

ⓘ **Note:** On the table below and throughout this document, x in the model number represents the operating frequency of the device as follows: 9 (912-919 MHz), 8 (868MHz), 4 (433MHz).

ⓘ **Note:** Only models operating in the band 912-919 MHz are UL/ULC listed where indicated. Only UL approved devices are to be used with UL/ULC listed systems.

Table 2: Compatible Devices

Modules			
Wireless keypads	HS2LCDWFx[UL] HS2LCDWFPx[UL]	HS2LCDWFPVx[UL]	
Hardwired keypads with 2-way wireless integration module	HS2LCDRFx[UL] HS2LCDRFPx[UL]	HS2ICNRFx[UL] HS2ICNRFPx[UL]	
Hardwired keypads ⓘ **Note:** The ICN and LED models can be used only in UL resi burg applications (no UL resi fire listing).	HS2LCD[UL] HS2LCDP[UL] HS2ICNUL[UL]	HS2ICNPUL[UL] HS2LEDUL[UL]	
Touchscreen Keypad ⓘ **Note:** For ULC-s559 Listed applications the HS2TCHP touchscreen keypad is for supplementary use only.	HS2TCHP[UL]		
2-way wireless integration module	HSM2HOSTx[UL]		
8-zone expander	HSM2108[UL]		
8-zone expander, 32 zones graphic annunciator (4x HSM2208), 64 zone graphic annunciator (8x HSM2208)	HSM2208[UL]	HSM3632[UL]	HSM3664[UL]
8-output expander	HSM2208[UL]		
Power supply	HSM2300[UL]		
4 high current output expander	HSM2204[UL]		
Audio alarm verification module	HSM2955		
Alternate communicator	3G2080E[UL] 3G2080RE[UL] TL280E[UL] TL280RE[UL] TL2803GE[UL] TL2803GRE[UL]	TL280LE[UL] TL280LER[UL] LE2080[UL] LE2080R[UL] TL880LT[UL] TL8803G-EU PCL-422[UL]	

Hardwired Devices					
2-wire smoke detector		System Sensor 2W-B ([UL]) 2WT-B ([UL]) 2WTA-B ([UL]) C2W-BA ([ULC]) C2WT-BA ([ULC]) C2WTA-BA ([ULC])		Refer to the device installation manual for connections.	
4-wire smoke detector		System Sensor 4W-B ([UL]) / C4W-BA ([ULC]) 4-wire Standard i3 Detector 4WT-B ([UL]) / C4WT-BA ([ULC]) 4-wire Standard i3 Detector with Fixed 135° Thermal Sensor 4WTA-B ([UL]) 4-wire i3 Detector with Fixed 135° Thermal Sensor and Sounder 4WTR-B ([UL]) 4-wire i3 Detector with Fixed 135° Thermal Sensor and Form C Relay 4WTAR-B 4-wire i3 Detector with Fixed 135° Thermal Sensor, Sounder and Form C Relay		Refer to the device installation manual for connections.	
CO detector	Potter Electric CO-12/24	System Sensor CO1224T ([UL]) CO1224TR ([UL]) CO1224A ([ULC])	Quantum 12-24SIR	Macurco CM-E1	Refer to the device installation manual for connections.
Mechanical Heat Detector		System Sensor	5601P 5602		Refer to the device installation manual for connections.
Reverse Polarity Module (for SD/CO interconnection)		System Sensor	COSMOD2W COSMOD4W		Refer to the device installation manual for connections.
32 zone graphic annunciator (4 x HSM2208 modules), 64 zone graphic annunciator (8 x HSM2208 modules)			HSM3632[UL] HSM3664[UL]		
Wireless Devices					
Wireless PG PIR motion detector		PGx904(P)[UL], PGx914(P)[UL]			
Wireless PG PIR + camera motion detector		PGx934(P)[UL]			
Wireless PG curtain motion detector		PGx924[UL]			
Wireless PG dual tech motion detector		PGx984(P)			
Wireless PG mirror motion detector		PGx974(P)[UL]			
Wireless PG outdoor motion detector		PGx994[UL]			
Wireless PG glass break detector		PGx912, PGx922[UL]			
Wireless PG shock detector		PGx935[UL]			
Wireless PG flood detector		PGx985[UL]			
Wireless PG temperature detector (indoor use)		PGx905[UL]			
Outdoor temperature probe (requires PGx905)		PGTEMP-PROBE			
Wireless PG key		PGx939[UL]			

Wireless PG key	PGx929[UL]
Wireless PG panic key	PGx938[UL]
Wireless PG 2-button key	PGx949[UL]
Wireless PG indoor siren	PGx901[UL]
Wireless PG outdoor curtain PIR	PGX902[UL]
Wireless PG outdoor siren	PGx911[UL]
Wireless PG repeater	PGx920[UL]
Wireless PG recessed contact	PGx307[UL]
Wireless PG door/window contact	PGx303[UL]
Wireless PG commercial contact	PGx309
Wireless PG outdoor contact	PGx312[UL]
Wireless PG CO detector	PGX933[UL]
Wireless PG smoke/heat detector	PGx936[UL]
Wireless PG ceiling mount detector with Smart Presence – long range	PGX872
Wireless PG ceiling mount detector with Smart Presence – short range	PGX862
Wireless PG door/window contact	PGx975[UL]
Wireless PG door/window contact w/ AUX	PGx945[UL]
Central Station Receivers	
SG-System I, II, III, IV, 5	
Enclosures	
The PowerSeries Neo main board can be installed in the metal enclosures listed below: Tamper protection switches can be installed on all enclosures, including door opening protection and/or removal from the mounting position. Doors can be secured using screws or keylock. Model PC4050C (hinged door) made of 18Ga steel, painted beige, dimensions 305mm(L) x 376mm(W) x 124mm(W) Model CMC-1 (hinged door) made of 18Ga steel (base) and 16Ga (door), painted beige, dimensions 287mm(L) x 298mm(W) x 94mm(H) Model PC5006C (removable door) made of 18Ga steel, painted white, dimensions 403mm(L) x 338mm(W) x 100mm(H) Model PC5003C (removable door) made of 22Ga steel, painted, dimensions: 248mm(L) x 298mm(W) x 76mm(H) For EN50131-1 Grade 2 compliant installations, all holes on the side of the cabinets shall be covered (plugged) if no accessories are installed in the cabinet that will use these mounting holes. The equipment enclosure shall be secured to the building structure before operation. Use 4 screws (appropriate for the wall material on which it is attached) inserted through the four mounting holes provided in the back of the enclosure base.	

Introduction

Installation

Overview of Installation Process

The steps below are provided to assist with the installation of the alarm system. Read over this section to get an overall understanding of the order of installation. Working from this plan can help reduce problems and reduce the overall time required for installation.

Step 1 – Create a Layout

Draw a rough sketch of the site and include all alarm detection devices, zone expanders, keypads and other required modules.

Step 2 – Mount the Panel

Decide on a location for the alarm panel and secure it to the wall using suitable mounting hardware. Mounting the Enclosure.

Step 3 – Wire the Alarm Controller

Wire each of the modules to the alarm controller following the guidelines provided in Corbus Wiring.

Step 4 – Wire Zones

Complete all zone wiring. Follow the guidelines provided in Zone Wiring to connect zones using normally closed loops, single EOL resistor, double EOL resistors, fire zones and keyswitch arming zones.

Step 5 – Complete Wiring

Complete all other wiring including bells or sirens, telephone line connections, ground connections or any other wiring necessary. Follow the guidelines provided in Terminal Descriptions.

Step 6 – Power up the Control Panel

Once all zone and alarm controller wiring is complete, connect the battery before applying AC, and power up the system. The alarm controller will not power up if only the battery is connected.

Step 7 – Enroll Keypads and Modules

All keypads must be enrolled in order to operate on the system. To enroll the first keypad, see Enrolling the First Keypad. To enroll optional keypads, enter installer's programming section [902] [000]. For more information, Module Programming.

Step 8 – Confirm Module Supervision

By default, all modules are supervised upon installation. Supervision is enabled at all times. To confirm that each module is properly supervised, [903] Confirm Module.

Step 9 – Enroll Wireless Devices

Wireless devices are enrolled via the wireless transceiver module (HSM2HOSTx) or RF keypad and Installer Programming section [804]. See Wireless Programming to enroll wireless devices.

Step 10 – Program the System

5 - I.D. Tone on Programming provides a complete description of how to program the alarm controller. It contains complete descriptions of the various programmable features and options. Fill out the programming worksheets starting at Programming Worksheets completely before attempting to program the system.

Step 11 – Test the System

Test the panel completely to ensure that all features and functions operate as programmed.

Alarm Controller Installation

Begin the installation by mounting the alarm controller in the metal enclosure using the stand-offs provided. Optional modules, such as the HSM2108 and HSM2208, can also be mounted in the enclosure.

Install hardware in the sequence indicated on the following pages.

Mounting the Enclosure

Locate the panel in a dry area, preferably near an unswitched AC power source and the incoming telephone line. Complete all wiring before applying AC or connecting the battery.

Wiring

All wiring entry points on the enclosure are designated by arrows. All circuits are classified UL power limited except for the battery leads. Minimum 1/4” (6.4mm) separation must be maintained at all points between power limited and non-power limited wiring and connections.

Terminal Descriptions

The following terminals are available on the PowerSeries Neo alarm controller.

Terminal	Description
BAT+, BAT-	Battery terminals. Use to provide backup power and additional current when system demands exceed the power output of the transformer, such as when the system is in alarm. Note: Do not connect the battery until all other wiring is complete.
AC	Power terminals. Connect the battery before connecting the AC. Do not connect the battery or transformer until all other wiring is complete.
AUX+, AUX-	Auxiliary terminals. Use to power modules, detectors, relays, LEDs, etc. (700mA MAX). Connect the positive side of device to AUX+, the negative side to AUX-.
BELL+, BELL-	Bell/Siren power (700mA MAX). Connect the positive side of any alarm warning device to BELL+, the negative side to BELL-.
RED, BLK, YEL, GRN	Corbus terminals. Use to provide communication between the alarm controller and connected modules. Each module has four Corbus terminals that must be connected to the Corbus.
PGM1 to PGM4	Programmable output terminals. Use to activate devices such as LEDs. (PGM1, PGM3, and PGM4: 50mA PGM2: 300mA or can be configured as an input)
Z1 to Z8 COM	Zone input terminals. Each zone should have one detection device; however, multiple detection devices can be wired to the same zone.
EGND	Earth ground connection.
TIP, RING, T-1, R-1	Telephone line terminals.
PCLINK_1	DLS/SA
PCLINK_2	DLS/SA, Alternate Communicator

Wire Routing for Power & Non-Power Limited

All wiring entry points are designated on the diagram by arrows. All circuits are classified UL installation power limited except for the battery leads which are not power limited.

A minimum ¼” (6.4mm) separation must be maintained at all points between power limited and non-power limited wiring and connections. See Wiring diagrams for expanded diagrams.

ⓘ **Note:** Wire entry for power limited wiring must be separated by a different entry access from non-power limited wiring.

Figure 1: Wiring Routing (North America only)

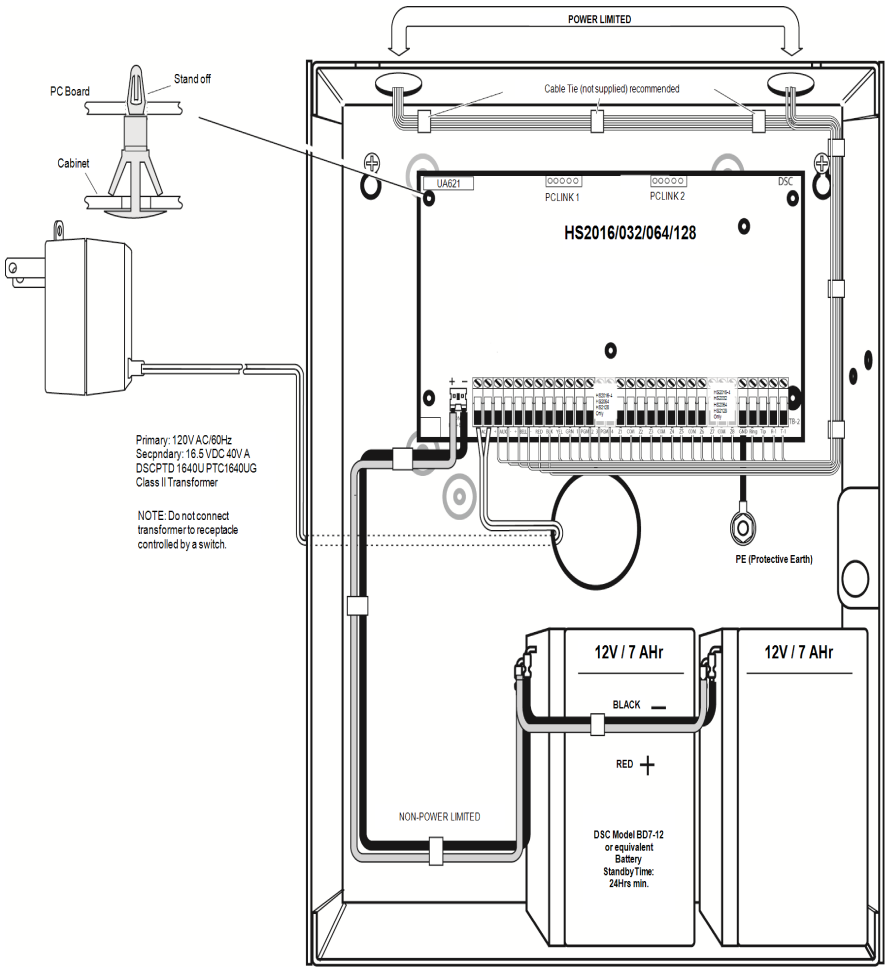
POWER LIMITED
PC Board
Stand off
Cabinet
Cable Tie (not supplied) recommended
UA621
PCLINK 1
PCLINK 2
DSC
HS2016/032/064/128
Primary: 120V AC/60Hz
Secpndary: 16.5 VDC 40V A
DSCPTD 1640U PTC1640UG
Class II Transformer
NOTE: Do not connect
transformer to receptacle
controlled by a switch.
PE (Protective Earth)
12V / 7 AHr
12V / 7 AHr
BLACK
RED
NON-POWER LIMITED
DSC Model BD7-12
or equivalent
Battery
Standby Time:
24Hrs min.

Figure 2: Wiring Routing (EN50131 only)

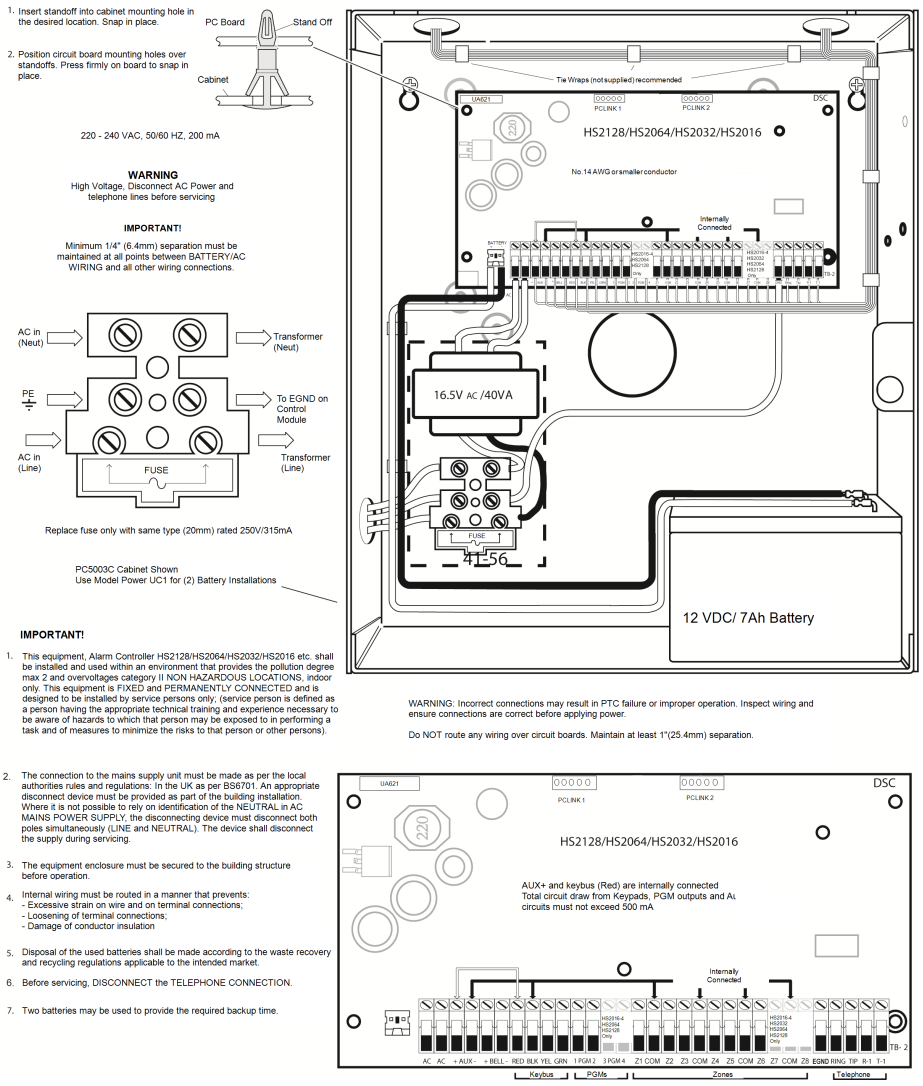

Corbus Wiring

The RED and BLK Corbus terminals are used to provide power while YEL and GRN are used for data communications. The 4 Corbus terminals of the alarm controller must be connected to the 4 Corbus terminals or wires of each module.

The following conditions apply:

- Corbus should be run with minimum 22 gauge quad, two pair twisted preferred.
- The modules can be home run to the panel, connected in series or can be T-tapped.
- Do not use shielded wire for Corbus wiring.

ⓘ **Note:** Any module can be connected anywhere along the Corbus. Separate wire runs for keypads, zone expanders etc. are not necessary.

ⓘ **Note:** No module can be more than 1,000'/305m (in wire length) from the panel. Do not use shielded wire for Corbus wiring.

Figure 3: Corbus Wiring

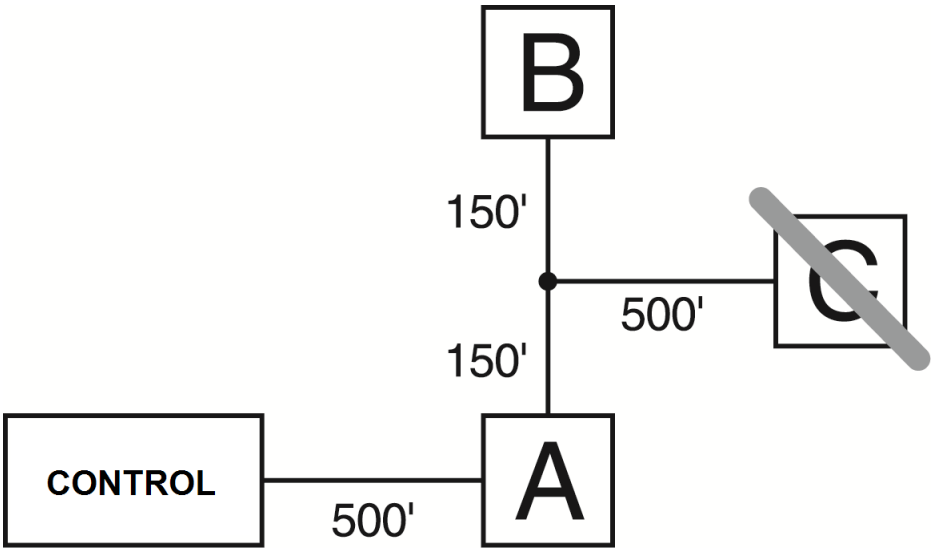

Module (A) is wired correctly as it is within 1,000'/305m of the panel, in wire distance. Module (B) is wired correctly as it is within 1,000'/305m of the panel, in wire distance. Module (C) is NOT wired correctly as it is farther than 1,000'/305m from the panel.

Current Ratings

In order for the system to operate properly, the power output of the alarm controller and power supply modules cannot be exceeded. Use the following data to ensure that the available current is not exceeded.

Table 3: System Output Ratings

Device	Output	Rating (12VDC)
HS2016-4 HS2016	AUX:	700mA. Subtract the listed rating for each keypad, expansion module and accessory connected to AUX or Corbus. At least 100mA must be reserved for the Corbus.
HS2032 HS2064 HS2064 E HS2128 HS2128 E	BELL:	700mA. Continuous rating. 2.0A. short term. Available only with standby battery connected. Not for use in UL/ULC or EN certified applications.
HSM2208	AUX:	250mA. Continuous rating. Subtract for each device connected. Subtract the total load on this terminal from the alarm panel AUX/Corbus output.
HSM2108	AUX:	100mA. Subtract for each device connected. Subtract the total load on this terminal from the panel AUX/Corbus output.

Alarm Controller Current Calculation

Panel Calculation

Maximum (Standby or Alarm)

AUX (700mA max. including PGMs 1-4)	
Corbus (700mA max.)***	
PCLink+ (Alt. Com.:125mA)	
Total (must not exceed 700mA)	

***See Corbus Current Calculation Chart.

For UL, ULC and Commercial Listed applications, the total standby and alarm current cannot exceed values in Table 4 .

Table 4: Corbus Current Calculation Chart

Item	Current (mA)	x	Quantity	Total (mA)
HS2016-4/HS2016/ HS2032/HS2064/ HS2064 E/HS2128/ HS2128 E	85	x	1	85
HS2LCD	105	x		
HS2ICN	105	x		
HS2LED	105	x		
HS2LCDP	105	x		
HS2ICNP	105	x		
HS2LCDRF	105	x		
HS2ICNRF	105	x		
HS2ICNRFP	105	x		
HS2TCHP	160	x		
Current required for connected devices =				
HSM2300*	30	x		
AUX output current of HSM2108				
HSM2208*	40	x		
AUX output current of HSM2208				
HSM2300/2204*	35	x		
HSM2HOSTx	35	x		
HSM2955**		x		
3G2080(R)E/ TL2803G(R)E/ TL280(R)E	125 (PCLINK)	x		
Total Corbus Current =				

*These units draw current from the Corbus to power devices external to the module. This current must be added to the total Corbus current. See manufacturer's specifications for the current draw of each device.

** For HSM2955 current draw refer to HSM2955 installation manual.

Line Loss

Voltage loss through wire resistance must be considered for all installations. To ensure proper operation, at least 12.5Vdc must be applied to all modules on the system (when AC is connected and the battery is fully charged). If less than 12.5Vdc is applied, system operation is adversely affected.

To correct the problem, try any or all of the following:

1. Connect a PowerSeries Neo power supply between the alarm controller and the module to provide additional power to the Corbus.
2. Reduce the length of the Corbus run to the module.
3. Increase the gauge of wire.

Capacitance Limits

An increase in capacitance on the Corbus affects data transmission and causes the system to slow down. Capacitance increases for every foot of wire added to the Corbus. The capacitance rating of the wire used will determine the maximum length of the Corbus.

For example, 22-gauge, non-shielded, 4-conductor wire has a typical capacitance rating of 20 picofarads per foot (which is 20nF/1000’). For every 1000' of wire added – regardless of where it is run – the capacitance of the Corbus increases by 20nF.

The following table indicates the total wire distance allowed for the capacitance rating of the wire used:

Table 5: Wire Capacitance

Wire Capacitance per 1000’ (300m)	Total Corbus Wire Length
15nF	5300’/1616m
20nF	4000’/1220m
25nF	3200’/976m
30nF	2666’/810m
35nF	2280’/693m
40nF	2000’/608m

Installing Modules

Remove all power from the system while connecting modules to the alarm controller.

Zone Expander

The main alarm controller has connection terminals for zones 1 to 8. Additional HSM2108 zone expanders may be added to increase the number of zones on the system. Each zone expander consists of one group of 8 zones. At enrollment, the zone expander is automatically assigned to the next available zone slot. Connect the RED, BLK, YEL and GRN terminals to the Corbus terminals on the alarm panel. Board current draw: 30mA.

Figure 4: HSM2108 Zone Expander

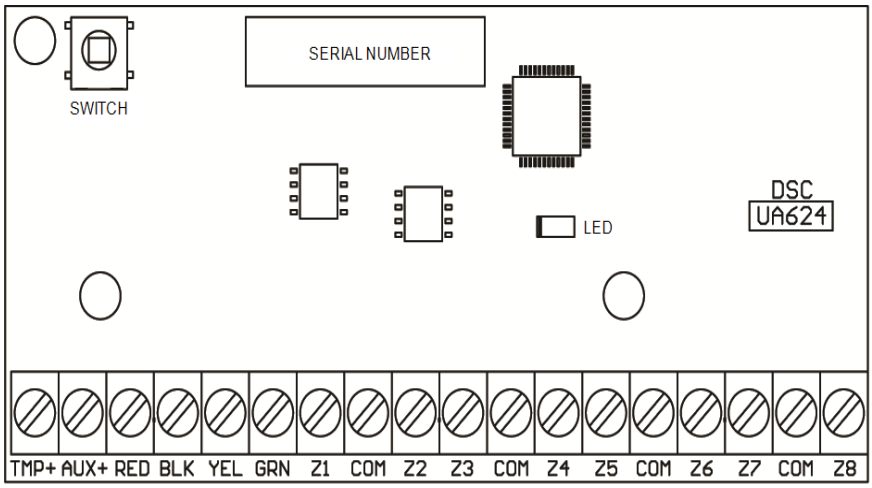

Refer to the HSM2108 installation sheet for more information.

Output Expander

The HSM2208 module is used to add up to 8 low-current programmable outputs to the alarm system.

The 4-wire Corbus connection is used by the panel to communicate with the module. Connect the RED, BLK, YEL and GRN terminals to the Corbus terminals on the alarm panel. Board current draw: 40mA.

Figure 5: HSM2208 Output Expander

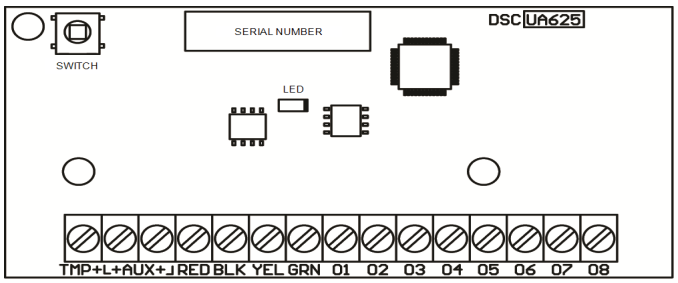

Wireless Transceiver Module

The HSM2HOSTx 2-way wireless integration module provides communication between wireless devices and the alarm controller.

Connect the HSM2HOSTx to the 4-wire Corbus of the alarm controller according to the following diagram.

Figure 6: HSM2HOSTx Wiring Diagram

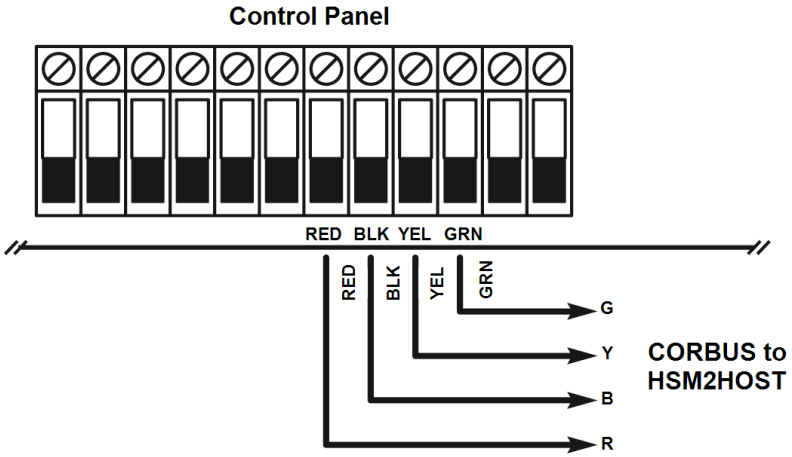

After you have completed the wiring, reconnect power to the security system. Board current draw: 35mA

Power Supply Wiring

The HSM2300/2204 power supply/high-current output module provides up to 1.0A of additional current and can be used to add up to four programmable outputs (HSM2204 only) to the alarm system.

The 4-wire Corbus connection provides communication between the module and alarm panel. Connect the RED, BLK, YEL and GRN terminals to the Corbus terminals on the alarm controller. If O1 is not used, connect to Aux with a 1K resistor. Board current draw: 1.2A.

Figure 7: Power Supply Wiring

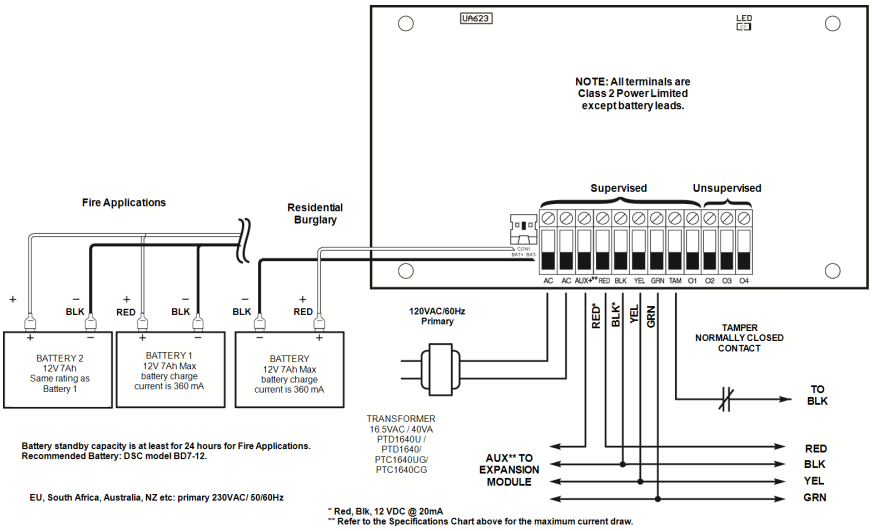

Keypad Wiring

To wire a keypad to the alarm controller, remove the keypad backplate (refer to the keypad installation sheet) and connect the RED, BLK, YEL and GRN terminals to the corresponding terminals on the alarm controller.

Keypad Zone/PGM Wiring

Hardwired devices can be connected to hardwired keypads with inputs (zone) or outputs (PGM). This saves from running wires back to the control panel for every device.

To connect a zone device to HS2LCD, HS2ICON, HS2LED and HS2TCHP keypads, run one wire to the P/Z terminal and the other to B. For powered devices, use red and black to supply power to the device. Run the red wire to the R (positive) terminal and the black wire to the B (negative) terminal.

Keypad zones support Normally Closed Loops, Single End of Line and Double End of Line.

To connect the PGM output, run one wire to the P/Z terminal and the other to R.

Figure 8: Keypad Terminals

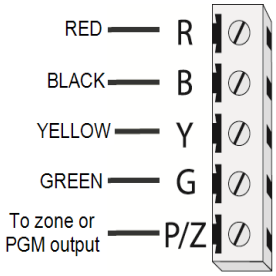

ⓘ **Note:** When using end of line supervision, connect the zone according to one of the configurations outlined in Zone Wiring. End of line resistors must be placed on the device end of the loop, not at the keypad.

Assigning Keypad Zones

When using keypad zone inputs, each input used must be assigned a zone number in Installer Programming.

First, ensure that you have enrolled all installed keypads into the desired slots ([902] Add/Remove Modules). Next, assign keypad zones by entering programming section [861]-[876], subsection 011 for keypads 1-16. Enter a 3-digit zone number for each of the keypad zones. This number must be programmed into the slot location that the keypad is assigned to.

ⓘ **Note:** If a keypad zone input is assigned to zone number 1 to 8, the corresponding zone cannot be used on the main control panel.

Once the keypad zones are assigned, you must also program zone definitions and zone attributes. [001] AssignZone Types and Zone Setup.

HSM2955 Wiring

For wiring information refer to HSM2955 Installation manual.

Alternate Communicator Wiring

See Alternate Communicator installation manual.

Zone Wiring

Power down the alarm controller and complete all zone wiring.

Zones can be wired to supervise normally open devices (e.g., smoke detectors) or normally closed devices (e.g., door contacts). The alarm panel can also be programmed for single end-of-line or double end-of-line resistors.

Zone programming is done using the following programming sections:

- [001] selects zone definition

- [013] Opt [1] for normally closed or EOL; Opt [2] for SEOL or DEOL
- [201 - 208] partition assignment.

Observe the following guidelines when wiring zones:

- For UL listed installations use SEOL or DEOL only
- Minimum 22 AWG wire, maximum 18 AWG
- Do not use shielded wire
- Do not exceed 100 Ω wire resistance. Refer to the following table:

Table 6: Burglary Zone Wiring Chart

Wire Gauge	Maximum Length to EOL Resistor (ft/meters)
22	3000 / 914
20	4900 / 1493
19	6200 / 1889
18	7800 / 2377
Figures are based on maximum wiring resistance of 100 Ω.	

Normally Closed

Connect hardwired devices to any Z terminal and any Com terminal. Wire normally closed devices in series.

ⓘ **Note:** For UL Installations, do not use normally closed loops.

Figure 9: Normally Closed

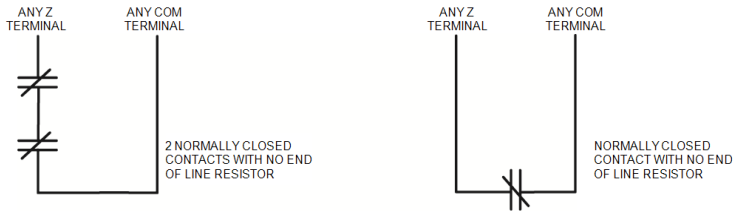

The following table shows zone status under certain conditions for NC Loops:

Table 7: NC Loop Status

Loop Resistance	Loop Status
0Ω (shorted wire, loop shorted)	Secure
Infinite (broken wire, loop open)	Violated

Single End-of-Line (SEOL) Resistor

When SEOL resistors are installed at the end of a zone loop, the alarm panel detects if the circuit is secure, open, or shorted. The SEOL resistor must be installed at the end of the loop for proper supervision.

To enable SEOL supervision, program section [013], options [1] and [2] to OFF.

ⓘ **Note:** This option should be selected if either normally closed or normally open detection devices or contacts are used.

Figure 10: SEOL Wiring

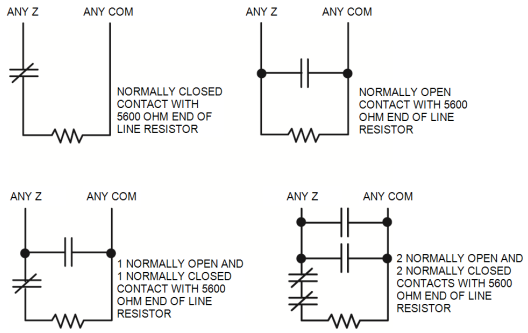

The following table shows zone status under certain conditions for SEOL:

Table 8: SEOL Loop Status

Loop Resistance	Loop Status
0Ω (shorted wire, loop shorted)	Violated
5600Ω (contact closed)	Secure
Infinite (broken wire, loop open)	Violated

Double End of Line (DEOL) Resistors

When double end-of-line (DEOL) resistors are installed at the end of a zone loop, the second resistor enables the panel to determine if the zone is in open, closed, tampered or faulted.

ⓘ **Note:** Any zone programmed for Fire or 24-hr Supervisory must be wired with a SEOL resistor regardless of the type of zone wiring supervision selected for the panel. If you change the zone supervision options from DEOL to SEOL or from NC to DEOL, power the system down completely, then power it back up for correct operation.To enable DEOL supervision, program section [013], option [1] to OFF and option [2] to ON.

Figure 11: DEOL Wiring

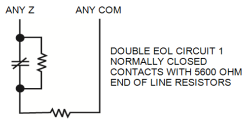

ⓘ **Note:** If the DEOL supervision option is enabled, all hardwired zones must be wired for DEOL resistors, except for Fire and 24 Hour Supervisory zones. Do not use DEOL resistors for Fire zones or 24 Hour Supervisory zones.

ⓘ **Note:** Do not wire Fire zones to keypad zone terminals if the DEOL supervision option is selected.

ⓘ **Note:** This option can only be selected if N/C detection devices or contacts are used. Only one N/C contact can be connected to each zone.

The following table shows zone status under certain conditions for DEOL:

Table 9: DEOL Loop Status

Loop Resistance	Loop Status
0Ω (shorted wire, loop shorted)	Fault
5600Ω (contact closed)	Secure
Infinite (broken wire, loop open)	Tamper
11200Ω (contact open)	Violated

PGM Wiring

Min/max operating voltages for devices, sensors and modules is 9.5VDC - 14VDC. PGMs switch to ground when activated from the alarm controller. Connect the positive side of the device to the AUX + terminal and the negative side to a PGM terminal. PGM 1, 3, 4 supply up to 50mA; PGM 2 supplies up to 300mA.

A relay is required for current levels greater than 50mA or 300mA. PGM2 can also be used for 2-wire smoke detectors, 24-hr burglary input alarm.

ⓘ **Note:** Use SEOL resistors on Fire zones only.

Figure 12: LED Output with Current Limiting Resistor and Optional Relay Driver Output.

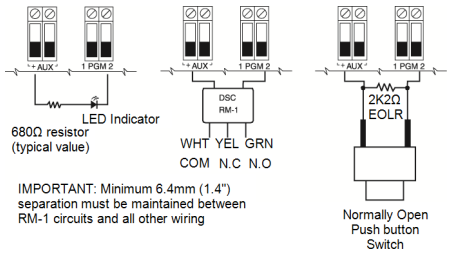

Bell Wiring

These terminals supply 700mA of current at 10.4 - 12.5VDC for commercial/ residential installations. To comply with NFPA 72 Temporal Three Pattern requirements, section [013] Opt [8] must be ON. Note that steady, pulsed alarms are also supported.

Figure 13: Bell Wiring

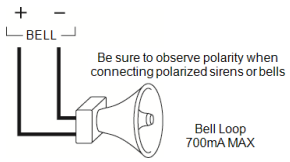

The Bell output is supervised and power limited by 2A thermistor. If unused, connect a 1000 Ω resistor across Bell+ and Bell- to prevent the panel from displaying a trouble. Troubleshooting.

Telephone Line Wiring

Wire the telephone connection terminals (TIP, Ring, T-1, R-1) to an RJ-31x connector as indicated in the following diagram. For connection of multiple devices to the telephone line, wire in the sequence indicated. Use 26 AWG wire minimum for wiring.

Figure 14: Telephone Line Wiring

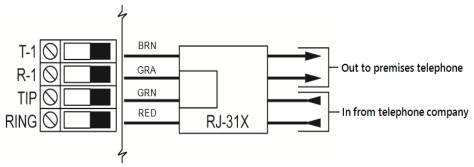

Note: Ensure that all plugs and jacks meet the dimension, tolerance and metallic plating requirements of 47 C.F.R. Part 68, Sub-Part F. For proper operation, no other telephone equipment must be connected between the control panel and the telephone company facilities.

Smoke Detector Wiring

All zones defined as Fire must be wired according to the following diagram:

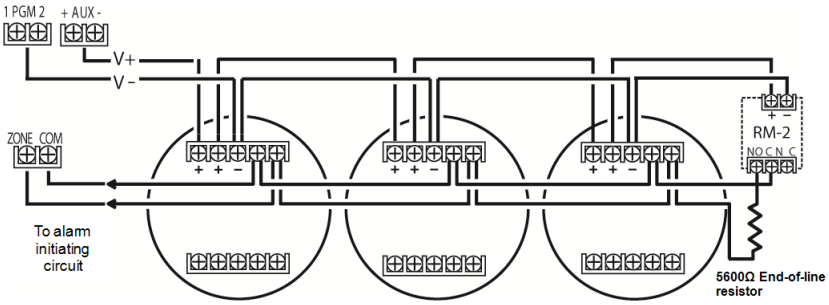

Figure 15: Smoke Detector Wiring

See[001] AssignZone Types for fire zone operation.

Note: Smoke detectors must be latching type. To reset a smoke detector, enter [*][7][2].

Table 10: Table 19 Compatible 4-Wire Smoke Detectors

4-wire smoke detectors -System Sensor
4W-B(UL)/C4W-BA(ULC) 4-wire Standard i3 Detector
4WT-B(UL) / C4WT-BA(ULC) 4-wire Standard i3 Detector with Fixed 135° Thermal Sensor
4WTA-B 4-wire i3 Detector with Fixed 135° Thermal Sensor and Sounder
4WTR-B 4-wire i3 Detector with Fixed 135° Thermal Sensor and Form C Relay
4WTAR-B 4-wire i3 Detector with Fixed 135° Thermal Sensor, Sounder and Form C Relay
Ratings: 10-35Vdc/50mA (max)

Note: If you use a non-powered heat detector, such as a fixed temperature or rate of rise type, no supervision relay is required and you should not wire the detector to a power output or PGM2. To wire a 4-wire smoke, heat, or CO detector, see the figure above.

Fire Zone Wiring: 2-wire Smoke Detectors

If PGM 2 is programmed for 2-wire smoke detector connection, the detectors must be wired according to the following diagram:

Figure 16: 2-Wire Smoke Detector Wiring

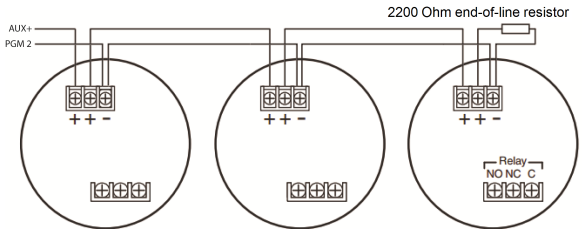

ⓘ **Note:** Additional 2-wire smoke detectors must be connected in parallel as shown above. The maximum number of smoke detectors on a 2-wire loop is 18.

ⓘ **Note:** Do not combine smoke detector models from different manufacturers on the same circuit. Operation may be impaired. Refer to the smoke detector installation sheet when positioning detectors.

Table 11: Table 19 Compatible 2-Wire Smoke Detectors

System Sensor	
2W-B (UL)	ⓘ **Note:** If you use system sensor detectors on a 2-wire loop, do not combine UL and ULC detectors. For more information, refer to the System Sensor installation manual. Do not connect accessories, for example, a polarity reversal module to a 2-wire smoke detector loop. The UL compatibility ID for the system sensor models is A.
2WT-B (UL)	
2WTA-B (UL)	
C2W-BA (ULC)	
C2WT-BA (ULC)	
C2WTA-BA (ULC)	

Table 12: Table 1-2 2-Wire Smoke Detector Initiating Circuit

Item	**Specification**
Style/Class, Supervised, Power Limited	Style B (Class B)
Compatibility Identifier	HS2-1
DC Output Voltage	9.4 - 13.8 V
Detector Load	2mA (MAX)
Single End of Line Resistor (SEOL)	2200W
Loop Resistance	24Ω (MAX)
Standby Impedance	1250Ω (MIN)
Alarm Impedance	650Ω (MAX)
Alarm Current	86mA (MAX)

CO Detector

The following hardwired CO detector models can be used with PowerSeries Neo alarm controllers:

- System Sensor, Models CO1224, CO1224T, CO1224TR, UL Listed in File E307195; Model CO1224A, ULC Listed in File E304075
- Macurco, Model CM-E1, UL File E354878

- Potter, Model CO-12/24, UL File E321434
- Quantum, Model 12-24SIR, UL File E186246

ⓘ **Note:** For multiple unit connections, the leads between CO detectors must be broken. The power supervision relay must be powered from the last detector in the loop.

Wireless CO detectors are also available. When installing wireless CO detectors, use only model PG9913UL, PG8913, PG4913. An HSM2HOSTx (x=9UL/8/4) wireless receiver or HS2LCDRF(P)x/ HS2ICNRF(P)x (x=9UL/8/4) wireless keypad are required when installing wireless CO detectors. For more details on these wireless devices, refer to their respective installation manuals.

ⓘ **Note:** Use only UL approved devices with UL/ULC listed systems.

Table 13: Table 19 CO Detector Ratings

Device	Description	Max Rating
CM-E1	Marcurco CO Detector	Current (normal / alarm): 15mA / 35mA @ 9-32V
CO-12/24	Potter CO Detector	40mA
CO1224, CO1224T, CO1224TR, CO1224A	System Sensor model CO detector	40mA
12-24SIR	Quantum CO Detector	75mA

Figure 17: CO Detector Wiring

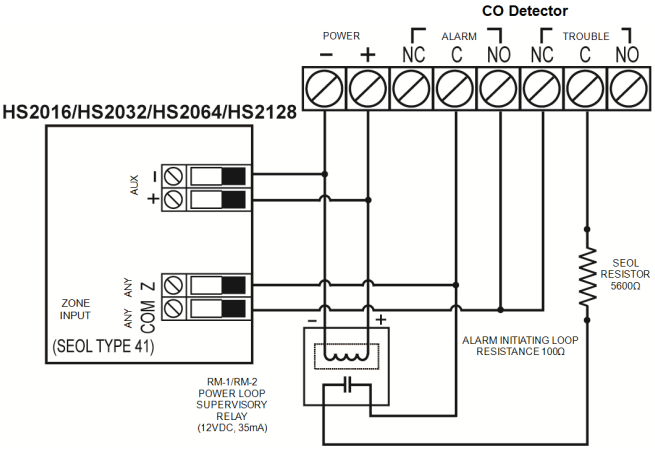

Ground Wiring

Figure 18: Ground Installation

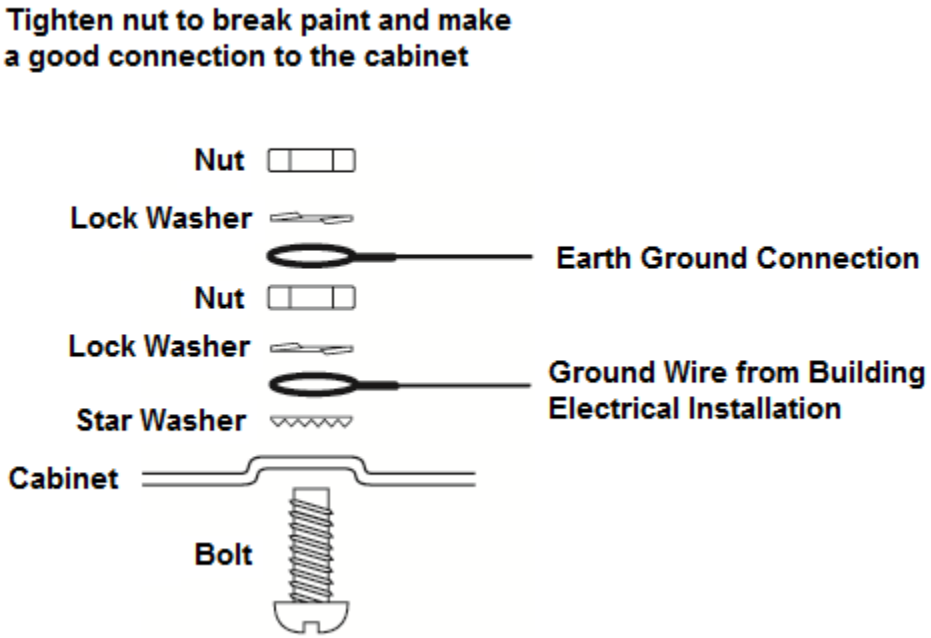

ⓘ **Note:** Using an insulated green wire (minimum 22AWG), connect the EGND terminal on the Corbus and the grounding wire from the building electrical installation to any of the available holes on the back or side of the metal cabinet. See the diagram attached to the cabinet for suggested GND point location and hardware recommendations.

ⓘ **Note:** Wire and installation hardware not included.

Connecting Power

Batteries

Do not connect the battery until all other wiring is complete.

ⓘ **Note:** A sealed, rechargeable, lead acid battery or gel type battery is required to meet UL requirements for power standby times.

Connect the RED battery lead to the positive battery terminal and the BLACK battery lead to the negative battery terminal.

The panel can be programmed to charge the battery at 400mA or 700mA. ([982] Battery Settings).

ⓘ **Note:** Aux Loading and Battery Selection

Battery Selection Chart

After calculating the battery capacity **(B)** for each specific installation use the following table to determine the battery required to support the main panel in standby mode for:

- 4 hours (UL commercial burglary/residential burglary)
- 12 hours (EN50131)
- 24 hours (UL/ULC residential fire, ULC residential burglary, ULC commercial burglary, ULC commercial fire monitoring - no bell load allowed; INCERT [Belgium])

The battery size is measured in amp hours (Ah). The current values in the table denote the maximum current draw permitted to achieve the desired standby time with the listed battery types.

Table 14: Table 19 Standby Battery Guide

Battery Size	Desired Standby Time			
	4h	12h	24h	36h
4Ah	700mA	------	------	------
7Ah	700mA	500mA	250mA	------
14Ah *	700mA		470mA	------
18Ah	------	------	------	300mA*
26Ah	------	------	------	500mA*

* use 2 x 7Ah batteries connected in parallel, UL/ULC installations only

Battery capacity deteriorates with age and the number of charge/discharge cycles. Replace every 3-5 years.

Refer to Regulatory Approvals for detailed Aux. loading and battery charging information.

Connecting AC Power

The alarm controller requires a 16.5V, 40VA transformer. While unplugged, connect the transformer to the AC terminals on the controller. The alarm controller can be programmed to accept a power line frequency of either 50Hz AC or 60Hz AC. See programming section [024], option [1].

ⓘ **Note:** For UL/ULC installations use only 60Hz.

ⓘ **Note:** For ULC S559 applications, Standex transformer (Model FTC3716) shall be employed for direct-wiring.

Configuration

Basic Configuration Steps

Once basic installation of the alarm panel is complete, the following general configuration options should be set:

- create partitions, Working with Partitions
- assign keypads to partitions, Keypad Partition Setup
- assign sirens to partitions, Bell/Siren Operation
- create global zones, Global Zones
- set up partition account codes, Communications
- set up partition timers, System Times
- enroll wireless modules and devices, Enrolling Modules
- assign zone types, [001] AssignZone Types, and attributes, [002] Zone Attributes
- create zone labels, Adding Labels
- add users, Assign Access Codes
- set up the alternate communicator if equipped, Alternate Communicator Setup

- program phone numbers, System Communications
- set up call directions for the central monitoring station, System Communications
- set up system timers, System Times
- configure reporting codes, Reporting
- test the system, Testing the System

Using the Keypad

The PowerSeries Neo alarm panel is compatible with several different keypad types (Compatible Devices); However, all keypads have certain basic functionality in common.

Special Keys

Scroll symbols < > on keypads with LCD displays indicate that options can be viewed by pressing the scroll ⊂ ⊃ keys. These keys can also be used to position the cursor.

The [*] key is similar in function to the "Enter" key on a personal computer. It is generally used to accept the existing programming option. It is also the first key entry for [*] commands and can be used to enter the letters A-F when in Installer Programming mode.

The [#] key is similar in function to the "ESC" (escape) key on a personal computer. It is generally used to exit the current programming section or to return to the previous one.

LED Indicators

Keypads have the following status lights that provide visual indication of basic system status:

✔	**Ready:** Panel is ready to be armed.
🔒	**Armed:** Panel is armed.
⚠	**Trouble:** System trouble. Enter [*][2] to view troubles.
∿	**AC Power**: ON=AC present. OFF=AC absent.

Panel Status LED Operation

The red status LED, located on the alarm controller PCB, indicates the following:

- Power up sequence – flashes rapidly until the end of the power-up sequence.
- Firmware indication – flashes during the firmware upgrade process. If the firmware upgrade fails, the LED flashes rapidly.
- Trouble indication – Flashes when troubles are present. Troubles are indicated according to the following priority:

1 flash - no keypads enrolled

2 flashes - module supervision trouble

3 flashes - bus low voltage

4 flashes - low battery trouble

5 flashes - AC trouble

6 flashes - AUX trouble

7 flashes - bell trouble

8 flashes - TLM trouble

How to Enter Data

Conventions Used In This Manual

Brackets [ ] indicate numbers or symbols that must be entered on the keypad.

e.g., [*][8][Installer Code][804] requires the following key entries:

[*][8][5555][804]

[*] initiates a special command.

[5555] is the default installer code. The default installer code should be changed during initial programming of the system.

[804] indicates the particular programming section being accessed.

Entering Letters Manually (System Labels)

1. In Installer Programming, enter the section requiring text input.
2. Use the arrow keys [<][>] to move the cursor to a blank space or existing character.
3. Press the number key corresponding to the appropriate letter. Each number button accesses three letters and a number. The first press of the number key displays the first letter. The second press displays the second letter, etc.

1 A, B, C, 1	**2** D, E, F, 2	**3** G, H, I, 3
4 J, K, L, 4	**5** M, N, O, 5	**6** P, Q, R, 6
7 S, T, U, 7	**8** V, W, X, 8	**9** Y, Z, 9,0
	0 Space	

4. To select lower case letters press [*]. The Select Options list opens. Scroll to “lower case” and press [*] again to select.
5. When the required letter or number is displayed use the arrow keys [<][>] to scroll to the next letter.
6. When finished, press the [*] key, use the [<][>] keys to scroll to “Save” then press [*].
7. Continue from step 2 until all labels are programmed.

   For information on entering hexadecimal data, see Programming Hex and Decimal Data.

Enrollment

All optional modules and devices must be enrolled on the system. During enrollment, the electronic serial number (ESN) of each device is identified to the control panel and zones are assigned. A

wireless transceiver HSM2HOST or an RF keypad must be enrolled first before wireless devices can be enrolled.

Enrolling Modules

During automatic and manual enrollment, if an attempt is made to enroll more than the maximum number of modules, an error tone sounds and a message is displayed on LCD keypads.

Table 15: Module Capacity

Module	HS2016-4	HS2016	HS2032	HS2064/ HS2064E	HS2128/HS2128E
HSM2108 8 Zone expander	1	1	3	7	15
HSM2208 8 Output expander	2	2	4	8	16
HS2LCD(P)X HS2ICN(P)X HS2LCDWF(P)(V)X	8	8	8	8	16
HS2TCHP Touchscreen Keypad	8	8	8	8	16
HSM2300 Power Supply 1A	3	3	3	3	4
HSM2204 4 High-current Output	1	1	1	3	4
Transceiver: HSM2HOSTx Keypads: HS2LCDRF(P)X HS2ICNRF(P)X	1	1	1	1	1
HSM2955 (not UL evaluated)	1	1	1	1	1

Modules can be enrolled automatically or manually using section [902] of Installer programming. For instructions on enrolling modules, Module Programming.

To confirm that a module has been successfully enrolled, use Installer Programming section [903]. [903] Confirm Module for details.

Enrolling the First Keypad

To enroll a hardwired keypad, connect the keypad to the alarm controller, power up the alarm panel then press any button on the keypad.

To enroll a wireless keypad, first connect the HSM2HOSTx wireless integration module to the alarm controller. Next, power up the alarm panel and a wireless keypad. Press any button on the keypad to enroll it on the HSM2HOSTx. The HSM2HOSTx is then enrolled on the alarm panel. To enroll other keypads, Module Programming.

Module Supervision

By default, all modules are supervised upon installation. Supervision is enabled at all times so that the panel can indicate a trouble if a module is removed from the system.

To check which modules are currently connected and supervised, [903] Confirm Module.

If a module is connected but is not recognized by the system, it may be due to any of the following reasons:

- the module is incorrectly wired to the alarm controller
- the module has exceeded its maximum wire run length

- the module does not have enough power
- the module is not enrolled on the wireless receiver

Removing Modules

Enrolled modules can be deleted from the system via programming section [902]. For instructions, [902] Add/Remove Modules.

Enroll Wireless Devices

Wireless devices are enrolled via the wireless transceiver module and Installer Programming section [804][000]. Compatible Devices for a list of supported wireless devices.

Wireless devices are enrolled using one of the following methods:

Auto Enrollment

To enroll a wireless device using this method, press and hold the Enroll button on the device for 2-5 seconds until the LED lights then release the button. The alarm panel automatically recognizes the device and the keypad displays a confirmation message. The device ID and next available zone number are displayed. Press [*] to accept or scroll to another available zone number. Batteries must be installed in the wireless device in order to enroll.

Various zone features are programmable depending on the type of device. Zone Setup for details.

Pre-Enrollment

Pre-enrollment is a two step process. The first step requires entering each device ID ([804][001]-[716]). Every wireless device has an ID printed on the sticker attached to the device. The format is XXX-YYYY where:

- XXX identifies the type or model of the device
- YYYY is a short encrypted ID used by the system to identify the specific device

Pre-enrollment can be done at a remote location and using DLS/SA. The second step is to press the enrollment button on the device, usually done on location. Installer Programming does not have to be entered at this step. Both steps must be performed in order to complete the enrollment.

Working with Partitions

A partition is a limited area of the premises that operates independently from the other areas. Partitioning a system can be beneficial if the property has outbuildings that need to be secured independently of a main area or if the home has a separate apartment.

Each partition can have its own keypad or a keypad can have access to all partitions (only if all partitions belong to the same owner). User access to partitions is controlled via access codes. A master code can access the entire system and partitions, while a user code is limited to assigned partitions.

Setting up a partition requires configuration of the following:

- create the partition
- define bell/siren operation
- assign keypads
- assign zones
- assign users

Setting Up a Partition

Partitions are added or removed from the system by applying or removing a partition mask via Installer Programming section [200]. The number of available partitions depends on the alarm panel model. [200] Partition Mask for more information.

Bell/Siren Operation

Each partition must have a siren. The system siren connected to the bell output of the alarm controller can be mounted in a central location within hearing range of all partitions. Each partition can also have wireless sirens activated only on the assigned partition. See Wireless Programming for details.

Single Siren Output Operation

With a siren shared across all partitions, control over activation/deactivation of the output depends on the partition that initiated the alarm sequence. Only the partition that originated the alarm can deactivate the bell output.

Global zones, such as smoke detectors shared by multiple partitions, can deactivate the siren on all partitions the zone is assigned to.

Multiple Siren Output Operation

When multiple sirens are used in the installation, they can be programmed to sound alarm conditions for all partitions, or for individual partitions by using a partition enable mask.

If hardwired sirens are used, this is accomplished via bus power supplies with a supervised high-current output. The output is then programmed as a Fire and Burglary PGM output type.

ⓘ **Note:** Only the first output of the HSM2204 output module has bell supervision. Some conditions, such as an installer system test, may override the partition assignment and cause all sirens to activate. User system tests only activate the sirens/outputs assigned to that partition.

Interconnected Smoke Detector Operation

When the Fire Alarm toggle is enabled ([804][001]-[128] option 14) on a zone with a PowerG smoke detector, any fire alarm on a partition assigned to the detector activates the sounder. Global fire alarms activate the sounder on all smoke detectors.The sounder on interconnected smoke detectors follows the panel bell for duration of activation ([014] option 8, Fire Bell Timeout). If this option is disabled, interconnected smoke detectors continue to sound the alarm until the bell is deactivated on the panel.

The following alarm types cause interconnected smoke alarms to sound:

- Fire zones

- [F] key alarms

- 2 Wire smoke input

Trouble Indicators

Both audible and visual trouble indications are available on all partitions. For more information, see Troubleshooting.

Programming section [013] option 3 controls whether or not troubles are indicated when the alarm system is armed.

Keypad Partition Setup

Keypads can be configured to control an individual partition or all partitions. In general, a partition keypad controls the partition it is assigned to. A Global keypad controls all partitions. Global keypads should be placed in common areas of the premises, such as points of entry or reception areas, where the ability to arm and disarm more than one partition at a time is required. Partition keypads can also be temporarily loaned to other partitions. To select a keypad operating mode:

1. Enter Installer Programming: [*][8][installer code].
2. Select [861]-[876] to program keypads 1-16.

   - Press [000] for partition assignment.
   - For Global operation, key in 00.
   - To assign a keypad to a partition, key in 01-08 for partition 1-8.

3. Press the [#] and reapeat step 2 for next keypad. When finished programming all keypads, press the [#] key twice to exit programming.

   Users are assigned partition access rights via the [*][5] menu.

Loaned Partition Setup

To loan a keypad to another partition:

1. Press and hold [#] then key in a valid access code. The keypad switches to Global display.
2. Use the arrow keys to scroll through available partitions. Press [*] to select. The keypad is temporarily loaned to another partition.

   If the keypad is inactive for more than 30 seconds, it reverts to its assigned partition.

Global Zones

If a zone is added to more than one partition, it becomes a global zone. A global zone is only armed when all assigned partitions are armed and is disarmed when any assigned partition is disarmed.

Global zones behave as follows:

- A global Stay/Away type zone is not activated until all partitions the zone is assigned to are armed in the Away mode. Interiors must be activated on all partitions for the global Stay/Away zone to be active.
- A shared zone bypassed on one partition is bypassed on all partitions the zone is assigned to.
- An entry delay started on a global zone sounds an entry delay on all keypads assigned to partitions the global zone is assigned to.
- A global Delay type zone follows the longest programmed delay time of the partitions it is assigned to.

Fire and CO Zone Types

- Fire zones only place the partition they are assigned to into alarm. Other partitions retain their current state. A fire reset only resets assigned partitions.
- One or more fire zones may be located on any partition.
- On alarm, the fire auto-scroll display appears on all partition keypads and on all global keypads. Fire alarm silence and fire system reset may be done directly on any partition keypad.

- To silence a fire or CO alarm from a global keypad requires that the global keypad be loaned to one of the partitions the zone is assigned.

ⓘ **Note:** The LCD keypad displays "Bell Silenced" after a fire or CO alarm is silenced with a user code. The display is cleared when all the fire zones or CO zones have been restored on system.

Bell/PGM Support

PGMs must be assigned to one or more partitions. See section [007] for partition assignment.

ⓘ **Note:** Bell PGM type requires supervision and follows arming squawks by partition.

Communications

Account codes are assigned to all system and partition events.

For SIA communications, a single account code (programmed in section [310][000]) is used for all events. The partition is identified via Nri1-8. System events use Nri0.

When using communication formats other than SIA, individual account codes can be programmed for each partition. [310] Account Codes.

Assign Zones

Partition zone assignments are completed using sections [201] - [208] for partitions 1 - 8. Subsections [001 - 016] are then used to enable or disable banks of 8 zones on the partition.

Assign Users

Acess [*][5] using the master code, select the desired user code and enter digit 4 to modify the partitions that can accept the user code.

Factory Defaults

Individual modules, as well as the alarm panel itself, can have their programming returned to factory default settings. Hardware is defaulted via the following Installer Programming sections:

- [991] Default Keypads

  - – Default all keypad programming
  - 001-016 – Default keypads 1-8

- [993] Default alternate communicator
- [996] Default wireless receiver
- [998] Default HSM2955
- [999] Default system

See Defaults for more information.

Default All labels

Use programming section [000][999]. The following labels are returned to factory default settings:

- Zone Label
- Partition Labels
- Module Labels
- Partition 1-8 Command Output 1 to 4 Labels
- Schedule 1 to 4 Labels
- Event Labels

- User Labels

System and module programming is not affected.

Hardware Reset Main Control Panel

Perform the following to restore the main control panel to default settings:

1. Power down the system.
2. Remove all wires between Zone 1 and PGM 1 on the alarm controller.
3. Connect a short between Zone 1 and PGM.
4. Power up the system (AC only) for 60 seconds.
5. Power down the system and remove the short.
6. Power up the system again. Factory defaults are restored.
   Hardware default is logged to the event buffer.

   ⓘ **Note:** Hardware default is not available when installers lockout is enabled

Alternate Communicator Setup

The alternate communicator is an optional wireless or ethernet communications device that can be used as a backup to the PSTN connection or as a primary means of communication between the alarm panel and the central monitoring station. The alternate communicator communicates via 3G (HSPA) or Ethernet.

The following configuration steps are required to set up the alternate communicator:

- Install the alternate communicator and wire it to the alarm panel (use PCLINK_2 header)
- Enroll the alternate cellular communicator with Connect 24
- Set the communication path: [300]
- Enable the alternate communicator: [382] option 5
- Enable event reporting: [307]/[308]
- Program communication delay timer: [377]
- Program DLS access: [401] option 07

Refer to the 3G2080(R)E/ TL2803G(R)E/ TL280(R)E installation manual for details.

Real Time Clock

This feature synchronizes the alarm panel time and date with that of the alternate communicator, provided real time clock support is available. Time and date are updated at 4:05 PM or when the system time is lost. This feature is enabled/disabled in Installer Programming section [024] option 5.

Communication Paths

The path of communication between the alarm panel and the central station must be established through either the alarm panel's on-board Public Switched Telephone Network (PSTN) connection or through the alternate communicator (cellular or Ethernet) if equipped.

Paths to four receivers can be programmed in Installer Programming section [300] options 001 - 004.

For more information, [300] Panel/Receiver Communication Paths.

Communications Options

The following alarm panel options must be programmed when configuring the alternate communicator:

[300] option 02: communication path ([300] Panel/Receiver Communication Paths)

[380] option 01: communications enabled/disabled ([380] Communicator Option 1)

[382] option 05: enable communicator and all associated options: telephone number, reporting code and call direction ([382] Communicator Option 3)

[308][351]-[356] reporting codes ([351] Alternate Communicator 1)

[401] option 7: DLS access ([401] System Test Events)

Communication Attempt Limit

If a telephone line monitoring (TLM) trouble is present, the number of PSTN dialing attempts is reduced from the programmed value to 0 attempts. See programming section [380] Communicator Option 1 for details.

Supervision Restore

If the alarm system experiences a failure to communicate (FTC) with the central monitoring station, it automatically attempts to transmit the event when communications are restored.

Remote Firmware Upgrade

Firmware upgrades can be automatically pushed to the alarm panel and modules from Connect 24 or DLS. A message is displayed on LCD keypads indicating a firmware upgrade is available. On all keypads, the blue proximity tag bar flashes one second on - one second off.

Users authorize the firmware upgrade through [*][6][Master Code][17].

During the update, a message indicating that a firmware upgrade is in progress is displayed on the LCD keypad. If the firmware update fails, an error message is displayed on LCD keypads.

Firmware updates are performed under the following conditions:

- The system is not armed
- No AC trouble is present
- No low battery trouble is present
- No FTC trouble is present
- Every alarm in memory has been viewed
- No events are being communicated
- An alternate communicator is present

Remote firmware upgrade is possible for the following modules:

- hardwired keypads, including HS2LCDRF
- wireless transceivers
- alternate communicators

ⓘ **Note:** For UL listed installations, do not use remote programming unless an installer is on the premises.

Local Firmware Upgrade

Alarm panel firmware can be upgraded locally via DLS. Firmware upgrade prevention rules are ignored when performing a local firmware upgrade.

To perform a local firmware upgrade:

ⓘ **Note:** [382][5] must be enabled to perform a local firmware upgrade.

1. Remove the front cover of the alarm panel and plug the DLS header into the PCLink 2 connector on the alarm controller.
2. Open the Flash Utility within DLS, select the latest firmware file from the Web or browse to a saved flash file on your hard drive. Follow the steps as prompted by the Flash Utility application. A message is displayed when download is complete.
3. Once the firmware update is complete, the system powers up.

Testing the System

Installer Walk Test

Walk test enables the installer to test the operation of each detector by tripping zones, causing an actual alarm. Enter section [901] to initiate a walk test. When a zone is tripped, all system sirens emit a tone to indicate that the zone is working correctly.

After 15 minutes without zone activity, the walk test terminates automatically. To manually exit walk test mode, enter [901] again.

Viewing the Event Buffer

The event buffer contains logs of events that have occurred on the alarm system beginning with the most recent. The capacity of the event buffer is scalable and can hold 500/1000 events (depending on panel model) before rolling over. The buffer displays events according to their time stamp, beginning with the most recent. The event buffer can be uploaded using DLS.

Each event displays the time and date, a description of the event, the zone label, access code number or any other pertinent information. To view the event buffer, press [*][6][Master Code][*].

System Operation

Arming and Disarming

The following table describes the various arming and disarming methods available.

Table 16: Arming/Disarming Methods

Method	Description
Away Arm	for 2 seconds + [Access Code*]
Stay Arm	for 2 seconds + [Access Code*]
Night Arm	when armed in stay mode [*][1] + [Access Code*]
Disarm	[Access Code]
No-Entry Arming	[*][9] + [Access Code]
Quick Arm/Quick Exit	[*][0]

* - requiring an access code can be programmed in Section [015]

For detailed arming/disarming instructions, see the PowerSeries Neo User Manual.

Partition vs. Global Keypad

Keypads can be configured to control an individual partition or all partitions (Keypad Partition Setup). Loaning a keypad to another partition does not require an access code; However, no function that requires an access code can be performed on that partition unless the user's code has sufficient permission.

Single Partition Operation

Single partition keypads provide access to alarm functionality for an assigned partition. Single partition keypads behave as follows:

- Displays the armed state of the partition.
- Displays open zones, if assigned to the partition the keypad is on.
- Displays bypassed zones and allows zone bypassing or creating bypass groups of zones assigned to the keypad partition.
- Displays system troubles (system low battery, system component faults/tampers).
- Displays alarms in memory that occurred on the partition.
- Allows the door chime to be enabled/disabled.
- Activate system test (sounds bells/PGMs assigned to the partition)
- Allow label programming (user labels for the partition)
- Control command outputs (those assigned to the partition, or global outputs such as smoke detector reset)
- Display temperature (not evaluated by UL)

Global/Multiple Partition Operation

Global keypads display a list of all active partitions or assigned partitions along with their current state. A valid access code is required to view partition status. The Global status screen displays the following:

1	**2**	**3**	**4**	**5**	**6**	**7**	**8**
R	**A**	!	**N**	-	-	-	-

R = Ready

A = Armed

! = Alarm

N = Not Ready

X = Exit Delay

E = Entry Delay

P = Pre-Alert

- = Partition not enabled

In the following example, partition 1 is armed, partition 2 is disarmed and ready, partition 3 is disarmed and not ready, partition 4 is in alarm, partition 5 is indicating exit delay, partition 6 is in entry delay, partition 7 is in auto-arm pre-alert and partition 8 is not enabled.

1	2	3	4	5	6	7	8
A	**R**	**N**	!	**X**	**E**	**P**	-

Global keypads behave as follows:

- Troubles are displayed and sounded on the global keypad. Troubles can be viewed from the global keypad display by pressing the right scroll key then (*). The Troubles menu is displayed. An access code may be required to enter the [*][2] menu depending on system programming.
- Keypad function keys can be programmed for Global Stay Arm, Global Away Arm and Global Disarm.
- Multiple partition arming/disarming may be done from a global keypad, assigned to the same partitions as the user, by keying in an access code then pressing [*].

Labels

Various custom labels can be created to make identification of the alarm system, partitions, zones and modules simpler. Labels are created by inputting text manually, by selecting words from the Word Library or by downloading/uploading using DLS. See [000] Label Programming

System Label

This feature is used to program a custom label for the security system. This label is used in the event buffer when system events occur. The maximum label size is 14 ASCII characters.

See [100] System Label for programming details.

Zone Labels

Customized labels can be created for each zone on the alarm system. These labels are used on various displays and events to identify the zone. The maximum label size is 14 x 2 ASCII characters.

See [001]-[128] Zone Labels for more details.

Partition Labels

Each partition on the alarm system can have a unique label to identify it. This label is displayed on partition keypads and event messages. The maximum label size is 14 x 2 ASCII characters.

See [101]-[108] Partition 1-8 Labels for more details.

Module Labels

Labels can be created for the following optional system modules:

- keypads
- zone expander modules
- output expander modules
- wireless transceiver
- power supply

- high-current output module
- alternate communicator module
- audio module
- siren
- repeater

The maximum label size is 14 ASCII characters.

See [801] Keypad Labels for more details.

Event Labels

Customizable labels can be created for the following events:

- Fire alarm
- Fail to arm
- Alarm when armed
- CO alarm

The maximum label size is 14 ASCII characters. See [001]-[128] Zone Labels for more details.

Partition Command Output Labels

This feature is used to program custom labels for command outputs. These labels are used with output activation events in the event buffer. The maximum label size is 14 x 2 ASCII characters. See [201]-[208][001]-[004] Partition Command Output Labels for more details.

Annunciation

Door Chime

The keypad can be programmed to use one of four different door chime tones for each zone on the system. Chime is active only during the disarm state. Only one door chime option can be enabled for each zone.

- Beeps
- Bing-Bong
- Ding-Dong
- Alarm Tone
- Zone Name - Voice Annunciation (HS2LCDWF keypads only)

Chime is enabled/disabled on a partition using the [*][4] command.

Temperature Display

Indoor and outdoor temperature can be displayed on system keypads if configured in keypad programming section [861]-[876]>[023] option 7, and sections [041]-[042]. Temperature is detected using wireless temperature sensors installed on the system. Compatible Devices

Global keypads only display outdoor temperature.

Low Temperature Warning

Keypads can be configured to detect low ambient temperature.

If the temperature at the keypad drops to 6° C ± 2° C (43° F ± 3°F), the keypad zone goes into alarm. When the temperature rises above 9° C ± 2° C (48° F ± 3° F), the keypad zone is restored.

When this option is enabled, the keypad's zone input functionality is disabled.

Refer to section [861]-[876]>[023] option 8 for more information.

ⓘ **Note:** This feature has not been evaluated by UL/ULC.

Keypad Function Keys

About this task:
Keypads have 5 programmable function keys that can be configured to perform one of the following actions:

Table 17: Function Key Programming Options

[00] Null Function Key	[17] Arm Interior
[02] Instant Stay Arm	[21]-[24] Command Output 1 to 4[*][71] - [*][74]
[03] Stay Arm	[29] Bypass Group Recall
[04] Away Arm	[31] Local PGM Activate
[05] [*][9] No-Entry Arm	[32] Bypass Mode
[06] [*][4] Chime On/Off	[33] Bypass Recall
[07] System Test	[34] User Programming [*][5]
[09] Night Arm	[35] User Functions [*][6]
[12] Global Stay Arm	[37] Time & Date Program
[13] Global Away Arm	[39] Trouble Display [*][2]
[14] Global Disarming	[40] Alarm Memory [*][3]
[16] Quick Exit	[61]-[68] Partition 1 to 8 Select

To program a function key:

1. Enter Installer Programming [*][8].
2. Enter section [861] for keypad 1 function key programming.
3. Enter [001] to [005] to select a function key to program.
4. Enter a 2-digit number to assign a function key operation - [00] - [68]. See table above.
5. Continue from step 3 until all function keys are programmed.
6. Press the [#] key twice to exit Installer Programming.
   Programmed function keys must be pressed for 2 seconds in order to activate the function.

Function Key Definitions

This section provides detailed descriptions of each programmable function key option.

[00] Null Function Key

This option deactivates the function key. The key does not perform any function when pressed.

[02] Instant Stay Arm

This feature is similar to the Stay Arm function key, except that no exit delay is applied and the system arms immediately.

If no Stay/Away zone types are programmed, the alarm system arms in Away mode.

ⓘ **Note:** Do not use this function with CP-01 installations.

[03] Stay Arm

Only perimeter zones are armed. Interior zones are bypassed regardless of whether or not delay zones are tripped during the exit delay.

[04] Away Arm

All interior and perimeter zones are armed. CP-01 panels require an exit through a delay zone during the exit delay or the system will arm the perimeter zones only.

[05] No-Entry Arm [*][9]

All Delay 1 and Delay 2 zones become instant zones. If a door or window is opened the system goes immediately into alarm. This function is typically used when no occupants are expected to return to the site during the armed period. Activation of this function key requires an access code.

[*][9] No-Entry Arming for more information.

[06] Chime On/Off

This function turns the door chime on or off and is the equivalent of pressing [*][4]. The alarm system must be disarmed to use this function. If option 7 in section [023] is enabled, this function key requires an access code.

[07] System Test

This function performs a system test when pressed and is the equivalent of entering [*][6][Access Code][04]. The alarm system must be disarmed to use this function. [*][6] User Functions for more information.

[09] Night Arm

All perimeter and interior zones, excluding Night zones, are armed. This key only works while the system is disarmed or armed in Stay mode.

If no Night type zones are programmed, the alarm system arms in Away mode with an audible exit delay. Exit delay is silent.

Arming in this mode activates the Away Arming PGM output.

[12] Global Stay Arm

This function arms all partitions assigned to the user in Stay mode, provided they are ready to arm. If a partition is not ready, the system cannot be armed. An access code is required with this option.

[13] Global Away Arm

This function arms all partitions assigned to the user in Away mode, provided they are ready to arm. If a partition is not ready, the system cannot be armed. An access code is required with this option.

[14] Global Disarming

This function disarms all partitions assigned to the user. An access code is required with this option.

[16] Quick Exit

Pushing this key allows the user to open and close an entry/exit door without disarming the system. This function is equivalent to entering [*][0] at the keypad while the partition is armed. If quick exit is not enabled on the system, or if the system is disarmed, pressing this key causes an error tone. An access code is not required to use this key. [015] System Option 3 for more information.

[17] Arm Interior

This key removes or enables automatic bypass on all Stay/Away zones (equivalent to pressing [*][1] while armed).

If this function is performed while stay armed and, Night zones are programmed, the system arms in Night mode. If no Night zones are programmed, the system arms in Away mode. If armed in Night or Away mode, this key switches the system back to Stay mode. Pressing this key does not switch the arming mode from Night to Away.

This key only works while the system is armed and requires an access code entry if section [015] option 4 is disabled.

[21]-[24] Command Output 1 to 4

This function controls command outputs 1-4 and is the equivalent of entering [*][7][X], where X is 1, 3 or 4.

An access code is required to use this function.

Selecting command output 2 is the equivalent of pressing [*][7][2] sensor reset. 103 - Sensor Reset [*][7][2] for more information.

[29] Bypass Group Recall

This function bypasses all zones belonging to the bypass group.

Zones must be saved in the bypass group for this function key to operate. An access code is required to use this feature if section [023] option 4 is enabled.

ⓘ **Note:** Do not use with wireless keys.

[31] Local PGM Activate

This function controls a PGM connected to a keypad.

[32] Bypass Mode

This function places the keypad in Zone Bypass mode. Selecting this function is the equivalent of pressing [*][1] while disarmed. If an access code is required for bypassing, the user must enter the access code before using this function. An access code is required if section [023] option 4 is enabled.

[33] Bypass Recall

This function bypasses the same set of zones that were bypassed the last time the partition was armed. This function is equivalent to pressing [999] while in the [*][1] menu. An access code is required to use this feature if section [023] option 4 is enabled.

[34] User Programming

This function is the equivalent of entering [*][5]. A master or supervisor access code is required to use this function. This key only works while the system is disarmed.

[35] User Functions

This function puts the keypad in user programming mode and is the equivalent of entering [*][6]. An access code is required to use this function. If section [023] option 8 is off, only the Master or Supervisor code can access the [*][6] menu.

[37] Time & Date Program

This function places the keypad in date/time programming mode. A valid access code is required.

[39] Trouble Display

This function puts the keypad in trouble display mode and is equivalent to pressing [*][2]. This function only works while the system is disarmed. This function key requires a code if section [023] option 5 is enabled.

[40] Alarm Memory

This function puts the keypad in alarm memory display mode and is equivalent to pressing [*][3]. This function only works while the system is disarmed. This function key requires a code if section [023] option 6 is enabled.

[61]-[68] Partition 1 to 8 Select

This function selects partition 1-8 when the assigned key is pressed. Pressing and holding the key for 2 seconds selects the next partition.

Language Selection

The keypad can be programmed to display messages and labels in different languages. Perform the following from the Installer Programming menu:

1. Enter installer programming [*][8][installer code]
2. Enter section [000]>[000].
3. Select a language using the scroll buttons or by entering a hotkey:

Table 18: Table 19 Languages

[01] – English	[15] – Greek
[02] – Spanish	[16] – Turkish
[03] – Portuguese	[18] – Croatian
[04] – French	[19] – Hungarian
[05] – Italian	[20] – Romanian
[06] – Dutch	[21] – Russian
[07] – Polish	[22] – Bulgarian
[08] – Czech	[23] – Latvian
[09] – Finnish	[24] – Lithuanian
[10] – German	[25] – Ukrainian
[11] – Swedish	[26] – Slovakian
[12] – Norwegian	[27] – Serbian
[13] – Danish	[28] – Estonian
[14] – Hebrew	[29] – Slovenian

4. Press [#] to exit.

[*] Commands

[*] commands provide convenient access to alarm system features. The following commands are available:

[*][1] Bypass zones

[*][2] View troubles

[*][3] View alarms in memory

[*][4] Door chime on/off

[*][5] User programming

[*][6] User functions

[*][7] Command output 1-4 on/off

[*][8] Installer programming mode

[*][9] No entry arming

[*][0] Quick arm/Exit

While in a [*] command menu, use the [*] key to select an option and the [#] key to exit to the previous screen. On an LCD keypad, use the scroll keys to view options.

[*][1] Bypass or Stay/Away/Night Zones

The [*][1] command functions differently depending on whether the system is armed or disarmed.

ⓘ **Note:** For UL/ULC listed installations, group bypass is not allowed.

When The Alarm System is Disarmed

Users can bypass individual zones or a programmed group of zones using the [*][1] keypad command. Zones are commonly bypassed if users want to have access to an area while the partition is armed, or to bypass a defective zone (bad contact, damaged wiring) until service can be provided. A bypassed zone does not cause an alarm.

When the partition is disarmed, all zones that were bypassed using [*][1] are no longer bypassed, except for 24-hr zones.

If the Code Required for Bypass option is enabled, an access code is required to enter bypass mode. Only access codes with the Bypass attribute enabled can bypass zones (see Access Code Attributes).

Bypassing zones with an LCD keypad:

1. Ensure the system is disarmed.
2. Press [*] to enter the function menu. The keypad displays “Press [*] for < > Zone Bypass.”
3. Press [1] or [*], then key in your access code (if required).
4. Scroll to a zone or key in the three-digit zone number. Only zones enabled for zone bypassing are displayed. Enter the 3-digit zone number or scroll to the desired zone and press [*] to bypass the zone.

   “B” appears on the display to indicate the zone is bypassed. If a zone is open, “O” appears on the display. When an open zone is bypassed, the “O” is replaced by “B.”
5. To clear a bypassed zone, repeat the above procedure. The “B” disappears from the display indicating that the zone is no longer bypassed.
6. To exit bypass mode and return to the ready state, press [#].

Bypassing zones with a LED/ICON keypad:

1. Ensure the system is disarmed.
2. Press [*][1], then enter your access code (if required).
3. Enter the three-digit number of the zone(s) to be bypassed. The zone light turns on to indicate that the zone is bypassed.
4. To clear a bypassed zone, repeat the above procedure. On LED keypads, the zone light turns off to indicate that the zone is no longer bypassed.
5. To exit bypass mode and return to the ready state, press [#].

   ⓘ **Note:** LED Keypads display the bypass status of zones 1-16 only.

Other Bypass Features:

The following features are also available on the [*][1] zone bypass menu:

Bypass Open Zones

Displays all currently open or bypassed zones. Use the scroll keys to view zones. Open zones are indicated by an (O). To bypass a zone, press [*]. A bypassed zone is indicated by a (B).

ⓘ **Note:** Zones with tampers or faults must be manually bypassed.

Bypass Group

Displays a programmed group of zones (bypass group) commonly bypassed. Press [*] to bypass all zones in the group.

Program Bypass Group

To program a bypass group, bypass all desired zones then select Bypass Options; Program Bypass Group. The selected zones are saved to the bypass group. When finished, press [#] to exit.

In order to program a bypass group, a master or supervisor code with access to the appropriate partition must be used.

Bypass Recall

Press [*] while in this menu to bypass the same group of zones that were bypassed the last time the partition was armed.

Clear Bypasses

Press [*] to clear all bypasses.

Shortcuts from the [*][1] base menu:

991 = bypass group

995 = program group 1

998 = bypass open zones

999 = bypass recall

000 = clear group

When The Alarm System is Armed

When the system is armed, pressing [*][1] toggles between stay, away or night arming. If a night zone is on the system, pressing [*][1] either prompts the user for an access code if required, or sounds an acknowledgment tone and changes the arming mode.

ⓘ **Note:** If section [022], Option 5 [Stay/Away Toggle] is on, the system does not change from Away to Stay mode.

The zone attribute for zone bypassing must be enabled (see section [002] Zone Attributes, Option 04).

Holdup zones should not be part of bypass groups.

A zone that is manually bypassed via [*][1] will bypass the alarm, fault, and tamper conditions when DEOL is used.

If a 24-hour zone is bypassed, ensure that the zone is restored or disabled before removing the bypass.

Troubleshooting

LCD programmable-message keypad:

- Press [*][2] followed by access code if required to view a trouble condition
- The trouble light flashes and the LCD displays the first trouble condition
- Use the scroll keys to view all trouble conditions present on the system

ⓘ **Note:** When additional information is available for a specific trouble condition, a [*] is displayed. Press the [*] key to view the additional information.

LED and ICON keypads:

- Press [*][2] to view a trouble condition
- The trouble light flashes
- Refer to the trouble summary list below to determine the trouble condition(s) present on the system

[*][2] Trouble Display

This feature is used to view system troubles. If a trouble is present, the keypad Trouble indicator illuminates and an audible indication is emitted (two short beeps every 10 seconds, except while in AC failure). Silence the audible indicator by pressing [#].

Troubles may be viewed while the system is armed or disarmed. The system may be programmed to show all troubles while armed or only fire troubles. See section [13] option 3 on [013] System Option 1 for details.

The system can be configured to require a user code to view [*][2] system troubles. See section [023] option 5.

ⓘ **Note:** For UL installations, section [023] option 5 must be ON. When this option is on, trouble beeps are silenced only after entering then exiting the [*][2] menu.

ⓘ **Note:** For UL installation, section [019] option 2 Latching Trouble must be ON.

ⓘ **Note:** If the wireless fire or CO low battery/tamper troubles are not removed, trouble beeps restart every 4 hours after being silenced.

To view trouble conditions:

- Press [*][2] to enter the Trouble menu.
- On an LCD keypad, scroll to a trouble type then press [*] to view the specific trouble. The zone name and trouble condition for each trouble are displayed on the screen.
- On LED/ICON keypads, zone indicator lights illuminate to identify existing trouble types (e.g., Zone light 1 represents Service Required trouble type). Press the number key corresponding to a zone light to view the specific trouble. Lights 1-12 illuminate to indicate the trouble as follows:

Table 19: Trouble Indications

Trouble 01 – Service Required:
[01] Bell Circuit Trouble: The bell circuit is open.
[02] RF Jam: The HSM2HOSTx detected an RF Jam condition.
[03] Aux Supply Trouble: The alarm controller, HSM2204 or HSM2300 has an overcurrent condition on Aux.
[04] Loss of Clock: System time and date require programming.
[05] Output 1 Fault: HSM2204 module detected an open condition on output #1.
Trouble 02 – Battery Trouble:
[01] Panel Low Battery Trouble: The battery voltage (under load) is below 11.5V. Restores at 12.5V.
[02] Panel No Battery: No battery connected to alarm controller.
[04] HSM2204 01 - 04 Low Battery: HSM2204 has a battery voltage less than 11.5V.
[05] HSM2204 01 - 04 No Battery: No battery connected to HSM2204.
[07] HSM2300 01 - 04 Low Battery: HSM2300 has a battery voltage less than 11.5V
[08] HSM2300 01 - 04 No Battery: No battery connected to HSM2300.
Trouble 03 – Bus Voltage:
[01] HSM2HOSTx Bus Low Voltage: The HSM2HOSTx module has measured less than 6.3V on its Aux input.
[02] Keypad 01 - 16 Bus Low Voltage: A hardwired keypad has a bus voltage of less than 6.9V for ICON/LCD (RF version) and 7.7V for non-RF models.
[04] HSM2108 01 - 15 Bus Low Voltage: A zone expander has a bus voltage of less than 5.9V.
[05] HSM2300 01 - 04 Bus Low Voltage: A power supply has a bus voltage of less than 6.9V.
[06] HSM2204 01 - 04 Bus Low Voltage: A high current output module has a bus voltage of less than 6.9V.
[08] HSM2208 01 - 16 Bus Low Voltage: The low current output module has detected a voltage less than 5.9V on its aux input.
[09] HSM2955 Bus Low Voltage: The audio module has detected a voltage less than 9.65V on its aux input.
Trouble 04 – AC Troubles:
[01] Zone 001 - 128 AC Trouble: An AC trouble has been detected on a PGX934 PIR + Camera.
[03] Siren 01 - 16 AC: A siren has an AC trouble.
[04] Repeater 01 - 08 AC: A wireless repeater has an AC trouble.
[05] HSM2300 01 - 04 AC: An HSM2300 has an AC trouble.
[06] HSM2204 01 - 04 AC: An HSM2204 has an AC trouble.
[07] Panel AC: The alarm controller has an AC failure condition.
Trouble 05 – Device Faults:
[01] Zone 001 - 128: A zone is in fault. Additional information displayed on LCD keypads for the following troubles: Fire Trouble (2-W Smoke, PGX916, PGX926), Freeze (PGX905), Self Test (PGX984), CO (PGX913), and Probe Disconnected (PGX905). Also generated by a short on hardwired zones when DEOL is used or by a wireless supervisory fault.
[02] Keypad 01 - 16: A wireless or hardwired keypad is in fault.
[03] Siren 01 - 16: A siren is in fault.
[04] Repeater 01 - 08: A wireless repeater is in fault (supervisory or loss of AC/DC).
Trouble 06 – Device Low Battery:
[01] Zone 001- 128: Wireless zone has a low battery.
[02] Keypad 01-16: Keypad has a low battery.
[03] Siren 01 - 16: Siren has a low battery.
[04] Repeater 01 - 08: Repeater has a low battery.
[05] User 01 - 1000: Wireless Key has a low battery.
Trouble 07 – Device Tampers:
[01] Zone 001 - 128 Tamper: A wireless or hardwired zone configured for DEOL operation is in tamper.
[02] Keypad 01 - 16 Tamper: A hardwired or wireless keypad is in tamper.
[03] Siren 01 - 16 Tamper: A wireless siren is in tamper.
[04] Repeater 01 - 08 Tamper: A wireless repeater is in tamper.
[05] Audio Station 01 - 04 Tamper: An audio station connected to an HSM2955 is in tamper.

Table 19: Trouble Indications

Trouble 08 – RF Delinquency Trouble: **[01]** Zone 001 - 128 RF Delinquency: No response from a wireless zone for 13 minutes. This trouble prevents arming until acknowledged or cleared using [*][2]. **[02]** Keypad 01 - 16 RF Delinquency: No response from a wireless keypad for 13 minutes. **[03]** Siren 01 - 16 RF Delinquency: No response from a wireless siren for 13 minutes. **[04]** Repeater 01 - 16 RF Delinquency: No response from a wireless repeater for 13 minutes.
Trouble 09 – Module Supervisory Trouble: **[01]** HSM2HOSTx not responding. **[02]** Keypad 01 - 16 not responding. **[04]** HSM2108 01 - 15 not responding. **[05]** HSM2300 01 - 04 not responding. **[06]** HSM2204 01 - 04 not responding. **[08]** HSM2208 01 - 16 not responding. **[09]** HSM2955 is not responding.
Trouble 10 – Module Tamper: **[01]** HSM2HOSTx Tamper. **[02]** Keypad 01 - 16 Tamper. **[04]** HSM2108 01 - 15 Tamper. **[05]** HSM2300 01 - 04 Tamper. **[06]** HSM2204 01 - 04 Tamper. **[08]** HSM2208 01 - 16 Tamper. **[09]** HSM2955 Tamper **[10]** Alt Comm Trouble: The trouble is for the Alt Comm tamper.
Trouble 11 – Communications: **[01]** TLM: Telephone line disconnected from control panel. **[02]** Receiver 01-04 FTC Trouble: Failure to communicate using programmed receiver paths. **[03]** Alt. Comm SIM Lock: SIM card has incorrect or unrecognized PIN. **[04]** Alt. Comm Cellular: Radio or SIM card failure, low signal strength detected, or cellular network fault. **[05]** Alt. Comm Ethernet: Ethernet connection unavailable. A valid IP address is either not programmed or the module was unable to get an IP with DHCP. **[06]** Receiver 01-04 Absent: Alternate communicator unable to initialize a receiver. **[07]** Receiver 01-04 Supervision: Alternate communicator unable to communicate with a receiver. **[09]** Alt. Comm Fault: The alternate communicator has stopped responding. **[10]** Alt Comm FTC Trouble: The alternate communicator has failed to communicate an internal event not generated by the panel.
Trouble 12 – Not Networked Troubles: **[01]** Zone 001-128 Not Networked Trouble: Generated when a zone becomes out of sync with the wireless network or has not been synchronized with the network after enrollment. **[02]** Keypad 01-16 Not Networked Trouble: Generated when a keypad becomes out of sync with the wireless network or has not been synchronized with the network after enrollment. **[03]** Siren 01-16 Not Networked Trouble: Generated when a siren becomes out of sync with the wireless network or has not been synchronized with the network after enrollment. **[04]** Repeater 01-08 Not Networked Trouble: Generated when a repeater becomes out of sync with the wireless network or has not been synchronized with the network after enrollment. **[05]** User 01 - 1000 Not Networked Trouble: Generated when a wireless key becomes out of sync with the wireless network or has not been synchronized with the network after enrollment.

IMPORTANT!

Ensure you have the following information available before contacting Customer Support :

- Alarm controller type and version, (e.g., HS2064 1.3):

  ⓘ **Note:** Version number can be accessed by entering [*][Installer Code][900] on any LCD keypad. This information is also located on a sticker on the printed circuit board.

- List of modules connected to control panel, (e.g., HSM2108, HSM2HOSTx etc.) .

[*][3] Alarm Memory Display

The Memory light flashes if an alarm, tamper or fault event occurred during the last armed period or while the panel was disarmed (24 hour zones). Press [*][3] to view zones in alarm memory. To clear the memory, arm and disarm the system. When viewing alarms in memory, LCD keypads indicate the last zone that has gone into alarm first, followed by other alarms in numerical order.

This feature can be programmed to require an access code. [023] System Option 11, option 6 for details.

A programmable function key may be configured to display alarms in memory. Keypad Function Keys for details.

[*][4] Door Chime Enable/Disable

When this feature is enabled, the keypad emits a tone whenever a zone programmed as a Chime type is opened or closed. Pressing [*][4] toggles between enabled and disabled. The door chime attribute for each zone is programmed in section [861]-[876], subsections [101]-[228].

A function key can also be programmed to enable/disable this feature. Keypad Function Keys for details. This feature may require an access code. [023] System Option 11, option 7 for details.

The following door chime sounds may be selected:

- beeps
- "Bing-Bong"
- "Ding-Dong"
- Alarm tone
- Zone Name -Voice Annunciation (HS2LCDWF keypads only)

[*][5] Program Access Codes

Use this section to perform the following functions:

- press [1] to program user codes 0002-1000, and master code 0001
- press [2] to enroll a proximity tag
- press [3] to add a custom label for each user
- press [4] to assign users to partitions
- press [5] to program user attributes

Assign Access Codes

In order to access alarm system functionality, users must be added to the system. This involves creating a unique access code and assigning attributes to each user. Access codes are programmed via the [*][5] menu.

Access code types

The alarm system provides the following user access code types:

Code	Add user	Delete user	Arm	Disarm	[*][5]	[*][6]	[*][8]
Installer	No	No	No	No	No	No	Yes +
Master	All*	All	Yes	Yes	Yes	Yes	No
Maintenance	No	No	Yes	Yes	No	No	No
User	No	No	Yes	Yes	No	No**	No
Supervisor	All but Master	All but Master	Yes	Yes	Yes	Yes	No
Duress	No	No	Yes	Yes	No	No	No
One-time user	No	No	Yes	1/day	No	No	No

+ If section [020] option 7 is on, a user must enter [*][6][Master Code][05] to give the installer permission to access programming.

* Can only change master code if section [015] option 6 is off.

** Yes if [023] option 8 is on.

The installer and master codes are system codes that can be changed but not deleted. The other codes are user-defined and can be added or deleted as necessary. By default, access codes have the same partition and attribute programming as the code used to program them.

Access codes are either 4, 6 or 8 digits in length, depending on the setting of programming section [041]. Duplicate codes are not valid.

ⓘ **Note:** EN50131-1 compliant systems using 1000 access codes shall set the access code to 8 digits (section [041], option 02).

Installer Code

This code provides access to Installer Programming [*][8]. The installer code can access all partitions and perform any keypad function. This code can be programed by the installer in section [006][001]. The default is 5555 (4-digit), 555555 (6-digit) or 55555555 (8-digit).

ⓘ **Note:** For EN50131-1 approved installations the installer code cannot change the master code or any other level 3 codes. Attempting to access the master code from the installers code generates an error tone from the system.

Master Code - Access Code [0001]

By default the master code can access all partitions and can perform any keypad function. This code can be used to program all access codes, including the supervisor and duress codes.

If section [015] option 6 is on, the master code can only be changed by the installer via Installer Programming.

The default is 1234 (4-digit), 123456 (6-digit) or 12345678 (8-digit).

The master code can be returned to factory default settings using Installer Programming section [989].

Maintenance Code

The maintenance code can only be used to arm and disarm the system. It cannot bypass zones. Use [*][9] to arm the system, cancel auto-arming, or perform [*][7] command functions. No arm/disarm bell squawks are sounded when the maintenance code is used. The Maintenance code can be programed by the installer in programming section [006][003]. The default is AAAA (4-digit), AAAAAA (6-digit) or AAAAAAAA (8-digit).

User Codes - Access Codes [0002] to [1000]

This type of access code is used to arm and disarm assigned partitions and perform other functions as programmed. It can access the [*][6] menu if programming option [023] option 8 is on. This code cannot access the [*][5] and [*][8] menus.

User access codes are created by the master user or supervisor users. The default is AAAA (4-digit), AAAAAA (6-digit) or AAAAAAAA (8-digit).

Supervisor Codes - Access Codes [0002] to [1000]

A supervisor code is a user code with the Supervisor attribute enabled. Users with this attribute can access the [*][5] and [*][6] user code programming section for the partition they are assigned to. However, these codes can only program codes which have equal or lesser attributes. These attributes are changeable via the [*][5] menu. A supervisor code is created by the master user or other supervisor users.

Duress Codes - Access Codes [0002] to [1000]

Duress codes function the same as user access codes, except they transmit a duress reporting code when used to perform any function on the system.

Duress codes cannot be used to access [*][5], [*][6] or [*][8] menus.

Duress codes are created by the master user or supervisor users.

ⓘ **Note:** Section [019] option 6 must be on to select the Duress Codes attribute.

One Time Use Code

A one time use code is a user code with the One Time User attribute enabled. This access code enables the user to arm the alarm system an unlimited number of times. However, a user with this code can only disarm the system once per day. The ability to disarm is reset at midnight or when the one time user code is keyed in by the master code user.

ⓘ **Note:** One time use code cannot be applied to wireless keys.

One time use codes are created by the master user or supervisor users.

To add an access code using an LCD keypad:

1. Press [*][5][master/supervisor code] to edit access codes 0002-1000.
2. Use the scroll keys to select a user then press [*] to edit.
3. On the “Press (*) for Access Code” menu, press [*]. The current access code is displayed.
4. Key in the new access code. The code is saved when the last number is keyed in.

   To erase an access code, select the user number and enter [*] as the first digit. All digits of the access code must be entered.
   A “-” beside a user code indicates it is not programmed. A “P” indicates the code is programmed. A “T” indicates the code is programmed and a proximity tag is enrolled.

On an LED/ICON keypad:

1. Press [*][5][master/supervisor code]
2. Enter a 4-digit user number.
3. Press [1] to select access code.
4. Enter a new access code.

Access Code Attributes

Each user code has 6 attributes that can be toggled on or off.

The default attributes of an access code are the same as the code used to enter [*][5], whether a new code is programmed or an existing one is edited. The available attributes are as follows:

- Supervisor
- Duress code
- Zone bypassing
- Remote access
- Bell squawk
- One time use code

1 - Supervisor

Converts standard user into supervisor user. See Access code types for details.

2 - Duress Code

Converts standard user code into duress code. See Access code types for details.

3 - Zone Bypassing

Users with this attribute can bypass zones. Section [023] option 4, Access code required for [*][1], must be on to use this attribute.

4 - Remote Access

Users with this attribute can access the alarm system remotely via SMS.

7 - Bell Squawk

When this option is assigned, the main bell squawks when the alarm system is away armed. For example, use the arm/disarm bell squawk attribute to have wireless key access codes squawk the bell, while other codes are silent. To do this, enable this attribute on all access codes associated with wireless keys. This option is off by default for all access codes.

ⓘ **Note:** One squawk indicates arming completed; two squawks indicates disarming completed.

ⓘ **Note:** This feature is independent of the system option “Bell Squawk on Away Arming.” See [017] System Option 5

The master code's attributes cannot be changed from default. The bell squawk is off at default.

8 - One Time Use Code

Converts standard user code into one time use code. Access code types for details. Do not apply this code to users with wireless keys assigned.

Using an LCD keypad:

1. Press [*][5][Master Code].
2. Use the scroll keys to choose a user (02-1000) then press [*] to select.
3. Scroll to “Press [*] for User Options” then press [*] to select.
4. Scroll to a user attribute and press [*] to toggle it on or off.

Using an LED/ICON keypad:

1. Press [*][5][Master Code].
2. Enter the access code to edit. Press [5] for attribute programming.
3. Press the keypad number key corresponding to an attribute to toggle it on or off.

Add User Labels

Custom labels can be programmed for each user to more easily identify them on the alarm system. Labels can be a maximum of 16 characters.

Using an LCD keypad:

1. Press [*][5] then select a user (02-1000).
2. On the “Press [*] for User Labels” screen, press [*].
3. Key in the custom user label. For instructions on how to input labels, [000] Label Programming

Assigning Proximity Tags

This section is used to assign proximity tags to users.

ⓘ **Note:** A proximity tag cannot be assigned to the master code.

Using an LCD keypad:

1. In the [*][5] menu, select a user or enter a user number.
2. Select “Press [*] for Prox Tag”, then pass the enrolled tag near the tag reader on the keypad. A proximity tag can only be assigned to one user at a time. Invalid (un-enrolled) proximity tags cannot be used.

Deleting a proximity tag:

To delete a proximity tag:

1. Select a user and then select Press [*] for Prox Tag.
2. Press the [*] key when prompted to delete the proximity tag.

Using an LED/ICON keypad

To use and LED/ICON keypad:

1. Press [*][5][Master/Supervisor Code].
2. Key in a 4-digit user code.
3. Key in [2].
4. Pass the enrolled tag near the tag reader on the keypad.

   To increase authentication flexibility, user access can be achieved by entering a valid user code or by swiping a proximity tag. Alternatively, users can be required to enter a valid access code and present a proximity tag. [040] User Authentication.

   ⓘ **Note:** A proximity tag can not be assigned to the Master code. If a user code with a proximity tag is deleted, the proximity tag must be re-enrolled.

Assigning Users to Partitions

About this task:
Each user code must be assigned to a partition(s) in order for the user to be recognized by the alarm system. By default, each code has the attributes of the code used to program it.
Using an LCD keypad:

1. Press [*][5][Master Code] then select a user (0002-1000). An “N” indicates they are not yet assigned to a partition. A “Y” indicates they are assigned to a partition.
2. Scroll to the partition assignment screen then press [*].

3. Use the number keys to assign partitions.
4. Press [#] to exit.

   ⓘ **Note:** The master code has access to all partitions and cannot be modified.

   Using an LED/ICON keypad:

5. Press [*][5][Master/Supervisor Code].
6. Key in the access code of the user.
7. Key in [4]. A zone lights illuminates to indicate which partition the user is currently assigned to. (e.g., if zone light 1 is on, the code is assigned to partition 1).
8. Press the keypad number key corresponding to the appropriate partition (e.g., press 1 to assign the user to partition 1).

User Authentication Options

About this task:
The alarm panel can be configured to accept one of two user authentication methods:

1. User code or proximity tag - the user can access the system by entering a valid code or by presenting a proximity tag.
2. User code and proximity tag - the user must enter a valid code and present a proximity tag to access the system. The user code and proximity tag must match. For example, if the tag is associated with user 0004, user code 0004 must be entered after presenting the tag. Any other user code is treated as invalid.

   See [040] User Authentication.

   ⓘ **Note:** An access code does not have to be programmed in order for a proximity tag or wireless key to be operational.

[*][6] User Functions

The [*][6] command provides access to functions described below. If section [023] option 8 is on, any user code can access this menu. If option 7 is off, only the master code can access this menu.

Event Buffer

Menu: [*][6][Master Code] ; Event Buffer

Keypad: [*][6][Master Code] ; [*]

This option is used to view system events stored in the event buffer.

Events are listed in the order they occurred, starting with the most recent. The time and date are listed for all events. Some events may have a second screen with a description. An asterisk (*) on the first screen indicates that a second screen is available.

If programmed, the event buffer automatically uploads to DLS/SA when it reaches 75% capacity.DLS Programming.

System Test

Menu: [*][6][Master Code] > System Test

Keypad: [*][6][Master Code] + 04

Select this option to test the alarm system's bell output, keypad buzzer and lights, communicator and standby battery.

Time and Date

Use this section to program the alarm system clock.

Menu: [*][6][Master Code] > Time and Date

Keypad: [*][6][Master Code] + 01

Enter time and date using the following format: (HH:MM); (MM-DD-YY). Valid time entries are 00-23 hours, 00-59 minutes. Valid date entries are 01-12 months, 01-31 days.

Other programming options that may affect this user function:

[901]/[902] – Daylight Savings Begin/End.

Auto-Arm/Disarm

Menu: [*][6][Master Code] > Auto Arm/Disarm

Keypad: [*][6][Master Code] + 02

With this feature enabled, the alarm system automatically arms in away mode (stay/away zones active) or disarms at a programmed time each day (see Auto-Arm Time below). The keypad emits three beeps to indicate the system is armed and one long beep to indicate it is disarmed.

All arming inhibit features such as latching tampers, AC inhibit, etc. also inhibit Auto Arming and send the Auto Arm Cancellation code.

Auto-Arm Time

Menu: [*][6][Master Code] > Auto Arm Time

Keypad: [*][6][Master Code] + 03

This function is used to program the time of day each alarm system partition automatically arms. To program an auto-arm time, select a day of the week and then key in the time. On LED/ICON keypads, zone lights 1-7 represent Sunday to Saturday. Valid time entries are 00-23 hours: 00-59 minutes.

At the programmed time, the keypad buzzers beep for a programmed duration (for ULC commercial burglary installations minimum duration is 10 minutes) to warn that automatic arming is in progress. The siren also squawks once every 10 seconds during this warning period if programmed to do so. When the warning period is complete, the exit delay elapses then the system arms in away mode.

Auto-arming can be canceled or postponed only by entering a valid access code during the programmed warning period. When a code is entered, the warning is silenced and auto-arming is canceled or postponed, depending on the auto-arm postpone timer. The Auto Arm Cancellation reporting code is transmitted (if programmed).

ⓘ **Note:** Auto-arming will not silence an active bell.

ⓘ **Note:** The Auto Arm Cancellation reporting code is also transmitted if arming is inhibited by one of the following:

- AC / DC Inhibit Arm
- Latching System Tampers
- Zone Expander Supervisory Fault

Other programming options that may affect this function:

[151]-[158] Partition Auto-Arm/Disarm

[014] System Option 2

Enable DLS/Allow System Service

Menu: [*][6][Master Code] > System Serv/DLS

Keypad: [*][6][Master Code] + 05

This function enables and disables the DLS window for either 1 or 6 hours depending on the programming of section [025] option [7].

This function also enables the end user to provide or deny access to [*][8] Installer Programming. When enabled, the installer can access Installer Programming either by DLS or via [*8] if a pre-programmed window has been set. After the window has expired, Installer Programming is unavailable again until the window is re-opened.

ⓘ **Note:** DLS programming is not UL tested.

Other programming options that may affect this function:

[020] System Option 8, and [021] System Option 9

[025] System Option 13, bit [025] System Option 13

User Call-up

Menu: [*][6][Master Code] ; User Call-up

Keypad: [*][6][Master Code] + 06

When selected, this function makes a single attempt to call the downloading computer. The downloading computer must be waiting for the call before downloading can be performed. Only one call-up is attempted. If a DLS phone number is not programmed, the alarm panel attempts to reach the DLS computer via IP connection. If the communicator is not properly configured for IP, an error tone is sounded.

User Walk Test

Menu: [*][6][access code] > Walk Test

Keypad: [*][6][access code] + 08

Selecting this function places the alarm panel into user walk test mode. The Ready, Armed and Trouble LEDs on the keypad flash to indicate that the test is active. If zones are tripped during a walk test, the system sounds a steady 2-second tone on all keypads to indicate that the zone is working correctly.

The walk test can be stopped at any time by re-entering [*][6][Master Code][08] on the keypad. The test automatically terminates after 15 minutes of inactivity. An audible warning begins 5 minutes prior to automatic termination.

ⓘ **Note:** Fire and CO alarms are not tested in user's walk test. If a fire or CO alarm is detected, walk test ends automatically and the appropriate reporting codes are sent immediately to the monitoring station. Refer to the manufacturers instructions provided with CO and Fire detectors for testing. This feature is not available in CP-01 systems.

Late to Open

Menu: [*][6][Master Code] > Late To Open

Keypad: [*][6][Master Code] + 09

This function enables or disables the Late to Open option. This option sends a reporting code to the central monitoring station if the partition has not been disarmed by a programmed time.

Other programming options that may affect this function:

[201] Open/Close Events 1, option [211] Miscellaneous Open/Close Events.

Late to Open Time

Menu: [*][6][Master Code] > Late To Open Time

Keypad: [*][6][Master Code] + 10

This function is used to program the time of day the partition must be disarmed by when the Late to Open option is enabled. A separate time can be programmed for each day of the week. Valid data entries are 00:00 - 23:59. 99:99 disables the late to open feature for the selected day.

Select a day of the week by scrolling while in the Late to Open menu, or by using keys 1-7 to select Sunday to Saturday respectively.

SMS Programming

Menu: [*][6][Master Code] > SMS Programming

Keypad: [*][6][Master Code] + 11

This function is used to program up to 8 phone numbers for SMS command access and communications. SMS enables users to send commands to the alarm panel via a mobile device.

Leave an SMS phone number blank to disable it. SMS phone numbers are not related to phone numbers used to dial the central monitoring station.

ⓘ **Note:** If SMS command and control features are disabled then this function is not accessible. See the alternate communicator installation manual for more information.

Brightness Control

Menu: [*][6][Master Code] > Brightness Control

Keypad: [*][6][Master Code] + 12

This function is used to change the brightness level of keypad display backlighting. Use the scroll keys to increase and decrease brightness or enter a value from 00 to 15. Selecting 00 turns off keypad backlighting.

Contrast Control

Menu: [*][6][Master Code] > Contrast

Keypad: [*][6][Master Code] + 13

This function is used to change the contrast level of keypad displays. Use the scroll keys to increase and decrease contrast or enter a value from 00 to 15. Selecting 00 turns off keypad contrast.

Buzzer Control

Menu: [*][6][Master Code] > Buzzer Control

Keypad: [*][6][Master Code] + 14

This function is used to change the volume level of keypad buzzers.

Use the scroll keys (LCD keypads) or the [*] key (LED/ICON keypads) to increase and decrease volume or key in a value from 00 to 15. Selecting 00 turns off the keypad buzzer.

ⓘ **Note:** For UL/ULC listed installations, do not turn off the keypad sounder.

Authorize Firmware Update

Menu: [*][6][Master Code] > Authorize Update

Keypad: [*][6][Master Code] + 17

This function is used to give authorization to the system to start the firmware upgrade process after all firmware upgrade files for the keypads, HSM2HOST, control panel and alternate communicator have been fully downloaded.

Once this option is activated, the keypads and system automatically exit [*][6] and indicate that the firmware update is in progress.

Interactive Services

Menu: [*][6][Master Code] > Interactive Serv

Keypad: [*][6][Master Code] + 18

This function is used by an alternate communicator to open the Interactive Services menu.

[*][7] Command Outputs 1-4

Menu: [*][7][master code if required] > Output Control

Keypad: [*][7][master code if required]

This option is used to activate or deactivate command outputs 1 to 4 for each partition and enable command outputs to follow a schedule.

Using an LCD keypad:

1. Press [*][7] to enter Output Control mode.
2. Scroll to an output and press [*] to select it, or key in a command output number. The output is toggled on or off or can activate for a fixed period of time.
3. Press [*][7][9] and enter the system master or supervisor code. Scroll to each command output and press [*] to enable or disable the use of a programmed schedule to control the output.**Using an LED/ICON keypad:**
4. Press [*][7] to enter Output Control mode.
5. Key in a command output number. The output is toggled on or off.
6. Press [*][7][9] and enter the system master or supervisor code. Press digits 1 to 4 to enable or disable the use of a programmed schedule to control the output.

   ⓘ **Note:** If no command outputs are programmed this function is not available. Other programming options that may affect this user function:See 121-124 – Command Outputs 1-4.

[*][8] Installer Programming

Use this option to place the alarm system in Installer Programming mode. Installer Programming is used to manually program alarm panel and module options. An installer's code is required to access this function.

Installer Programming is exited automatically after 20 minutes of inactivity.

When viewing data in sections with an LCD keypad, use the [<] and [>] keys to scroll.

Other programming options that may affect this user function:

[990] Installer Lockout Enable/Disable

[*][9] No-Entry Arming

This function is used to arm the alarm system while occupants are on the premises. Pressing [*][9] and then keying in an access code arms the panel without an entry delay on delay type zones and bypasses stay/away and night type zones.

After the exit delay, delay 1 and delay 2 type zones behave the same as instant zones. Stay/away zones remain bypassed. The entry delay can be activated or deactivated at any time while the system is armed using [*][9].

ⓘ **Note:** If the alarm system is armed using [*][9], disarming is only possible from a keypad inside the premises unless a wireless key is used.

ⓘ **Note:** Entry of a valid access code is required following this key only when the system is disarmed. When armed, if programming section [015] option 4 (Quick Arming/Function Key) is off, an access code entry is required.

Global delay zones always have an entry delay, even if the system is armed using [*][9].

[*][0] Quick Arm/Exit

This feature operates differently depending on whether or not the alarm system is armed or disarmed.

When disarmed:

Pressing [*][0] arms the alarm system without having to enter an access code. This provides a fast method of arming for regular users and allows users without an access code to arm the system.

ⓘ **Note:** The Quick Arm feature (section [015] option 4) must be enabled in order for this function to operate as intended. Function keys also will not require an access code when this option is enabled.

When armed:

This feature provides a means to exit the premises while the alarm system is armed without having to disarm then rearm it.

Pressing [*][0] starts a 2-minute timer that enables any door programmed as a delay zone to be opened and closed once without triggering an alarm.

If the door is not closed at the end of the 2-minute timer, the entry delay sequence begins. Any additional activity on another zone triggers the associated alarm or delay sequence.

SMS Command and Control

The user can perform certain functions on the alarm panel by remote using SMS text messages. In addition, the system sends SMS messages to the user to confirm commands . SMS programming options are accessed through programming section [851].

The security system only responds to SMS messages sent from designated phone numbers (programmed in section [851]>[311]-[342]).

For more information on SMS command and control, and for a complete listing of communicator programming options, refer to the alternate communicator installation manual.

SMS Command and Control Functions

The following alarm system functions are controllable via SMS:

- Stay arm the system

- Away arm the system
- Night arm the system
- Disarm the system
- Activate/deactivate command output 1-4
- System status request
- Alarm memory request
- Zone bypass
- Zone unbypass

SMS text messages must be formatted as follows:

<function name><space><partition #><space><access code>

e.g., Stay Arm partition 1 1234

Once the command is received and executed by the alarm system, the user receives a confirmation text message.

ⓘ **Note:** Do not use Away Arm if Push to Set [001][072] or Final Door Set [001][016] zones are programmed.

Visual Verification

Allows the monitoring station to use video clips captured from system motion cameras for verification of any alarms.

ⓘ **Note:** This is a supplementary feature that has not been investigated by UL/ULC.

ⓘ **Note:** Must be enabled and configured by installer.

System Operation

Programming

How to Program

This section describes how to view alarm system programming options using the supported keypad types.

Programming Methods

The alarm system can be programmed using the following methods:

Table 20: Programming Methods

Method	Description	Procedure
Template programming	Use pre-defined templates to quickly apply basic programming and to set up DLS downloading.	Press [899] at the “Enter Section” screen. See Template Programming below for details.
DLS programming	Download and apply programming using DLS 5 v1.3 for Neo v1.0 panels and DLS 5 v1.4+ for Neo v1.0 and up products.	For local DLS, use a PC-Link cable and laptop with DLS-5 software installed. For remote DLS, use a telephone line, cellular network or the Internet.
Installer programming	Manually program all alarm system and device options.	Press [*][8][installer code] while the system is disarmed.

Template Programming

About this task:
Template programming allows the installer to quickly program the minimum functions required for basic operation. The installer is prompted to enter a 5-digit code that selects predefined programming configurations:
Digit 1 – zone 1-8 definition options
Digit 2 – system EOL options
Digit 3 – alarm controller communications options
Digit 4 – alarm controller call directions
Digit 5 – DLS connection options
Perform template programming after completing the hardware installation. Ensure you have the information listed below available. Record this information in the programming worksheets for future reference:

- Monitoring station telephone number - provided by the alarm monitoring service.
- Monitoring station account code - provided by the alarm monitoring service.
- Downloading access code.
- Entry delay - installer defined.
- Exit delay - installer defined.
- Installer code - programmable, unique 4-digit code. The default value is [5555].

To perform template programming:

1. Enter [*][8][installer code][899]. If this section has been entered accidentally, press # to exit and the system programming will not be changed.
2. At the “Enter Data” screen, enter a 5 digit value representing the desired programming options. Reference the template programming tables to determine what values are required for the installation.
    3. Once the 5 digit number has been entered, the installer cannot exit until all sections are completed. Enter new data and/or press the [#] key to accept the displayed data and proceed to the next section. Changing a single digit, then pressing the [#] key advances to the next section but does not save the changed data.

4. After entering a 5 digit template programming value, the first telephone number is displayed. Enter the monitoring station telephone number after the “D.” Press [#] to complete the entry.
5. After programming the first telephone number, enter a system account code.

- The system account code can be any 4 or 6-digit combination of numbers (0-9) and letters (A-F).
- To enter letters A through F, press [*] then the numbers 1 through 6 for the letter A through F respectively. Press [*] again to revert back to decimal entry. E.g., to enter “1234FF” press [1234*66].

[310] Account Codes for additional details. When the system account code programming is completed, enter a partition 1 account code using the same method as the system account code.

1. After programming the partition 1 account code, the downloading access code is displayed. Enter the new downloading access code or press [#] to proceed to the next step. The downloading access code must changed from its default value.
2. The next value is a 3 digit partition 1 entry delay time. Press [>][>][>] to accept the default time of 30 seconds (030) or enter an entry delay between 001 and 255. E.g., Press 020 for a delay of 20 seconds. for additional details. The CP-01 models of the Neo panel will not accept a value less than 30 seconds.
3. The next value is a 3 digit partition 1 exit delay time. Press [>][>][>] to accept the default time of 120 seconds or enter an exit delay between 001 and 255. E.g., press 030 for a delay of 30 seconds. for additional details. The CP-01 models of the Neo panel will not accept a value less than 45 seconds.
4. After programming the exit delay, enter a 4, 6 or 8-digit installer code, depending on the value in [041] Access Code Digits. [006] Installer Defined Access Codes for installer code details.
5. Template Programming will automatically exit after the installer's code has been programmed.

   ⓘ **Note:** EN50131-1 compliant systems using 1000 access codes shall set the access code to 8 digits (section [041], option 02).

DLS Programming

DLS programming involves downloading custom programming using DLS software and a computer. This can be done locally or by remote.

ⓘ **Note:** For UL listed systems an installer must be on the premises.

Local Programming With PC-Link

Follow the steps below in the sequence indicated to set up local programming using DLS:

1. Connect AC Wiring.

   In a new installation, the backup battery requires 24 Hrs. charging. AC Power is required for PC-Link Programming until the battery is charged.
2. Plug the PC-Link header into the alarm controller. A DLS session is initiated on the DLS computer.
3. When the session is complete, remove the PC-Link cable from the alarm controller.
4. Complete the installation.

Remote Programming

DLS programming can be performed remotely by connecting to the alarm system via telephone line, cellular network or Ethernet.

See [401] DLS/SA Options for details.

ⓘ **Note:** AC Power must be present for the alarm system to answer incoming calls from DLS.

Installer Programming

Installer Programming is used to manually program alarm system options. Access this mode by keying in [*][8][Installer Code]. Use the scroll keys to navigate through the menus or jump directly to a specific section by keying in a section number.

Programming consists of toggling on and off options in each section or by populating data fields. For descriptions of all programming options, Programming Descriptions.

Viewing Programming

Programming sections can be viewed from any system keypad. The method for viewing and selecting programming options using LCD, LED and ICON keypads depends on the keypad type used. See below for specific instructions on programming with each keypad type.

Generally, programming options are accessed in the following way:

1. Enter Installer Programming mode ([*][8]).
2. Navigate to a specific programming section.
3. Select an option to view or change its programming.

   All programming options are numbered and can be accessed by navigating through the menu (LCD) or by keying in the program section number. For toggle options, the name of the option is displayed (LCD) or LEDs 1-8 are illuminated (LED and ICON).
   Use the keypad numbers to toggle options on or off. Sections requiring data input, such as phone numbers, display the full data in fields up to 32 characters long (LCD). To input data, use the scroll keys to select a character then press the keypad button corresponding to the number/letter required. Scroll to the next character and repeat the procedure as needed. Press the [#] key to save changes and exit the program section.
   The programming worksheets and descriptions later in this section provide a place to record custom programming settings and are numerically listed to assist in locating specific sections.

Keypad Types

The sections below describe how programming is viewed and interpreted using each of the supported keypad types. For more information on each keypad type, see the instruction sheet included with the keypad.

LED and ICON

Both of these keypads use LEDs to communicate information. The programming icon illuminates to indicate the alarm system is in Installer Programming mode. The Armed light turns off and the Ready light turns on while in a programming section.

Programming sections fall under two categories: those that require options to be “toggled” on or off, and those that require data to be keyed in.

Toggle options are indicated across the top of the display using zone numbers 1-8. For example, if options 1 and 4 are on, the display appears as follows on the different keypads:

Figure 19: LED and ICON displays

To enable or disable a toggle option, press the number key on the keypad corresponding to the option.

Sections requiring data input, such as phone numbers, display information in a binary format using zone LEDs 1-4 as described in the following chart:

Figure 20:

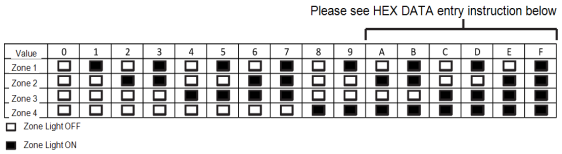

When a section is entered, the keypad immediately displays the first digit of information programmed. Using the example in Figure 20, if zone 1 and 4 are illuminated, the first programmed digit in the section is 9. Use the scroll key [>] to advance to the next digit.

For sections that require multiple two or three-digit numbers, the keypad beeps three times after each entry and moves to the next item on the list. After the last digit in the section is entered, the keypad beeps rapidly eight times and exits the programming section. The Ready light turns off and the Armed light turns on.

To exit programming at any time, press the [#] key. All changes made up to that point are saved.

LCD Keypad

LCD keypads use a full-message display that provides visual and numerical navigation through the programming sections. The Armed light illuminates when Installer Programming mode is activated. Use the scroll keys to move through menu options and press [*] to select. Alternatively, enter a specific section number. The Armed light flashes to indicate a sub-section has been selected. Press [*] to select a sub-section. The Ready light illuminates and the information programmed in the section is displayed.

For programming sections with toggle options, press the corresponding number on the keypad to turn the option on or off. The display changes accordingly.

Sections requiring data input, such as phone numbers, display the full data in fields up to 32 characters long.

To input data, use the scroll keys to select a character then press the keypad button corresponding to the number/letter required. Scroll to the next character and repeat the procedure as needed.

For information on entering HEX data, see below.

A 2-second error tone is sounded if an invalid key is pressed.

Press the [#] key to exit the program section at any time. All changes made up to that point are saved.

Programming Hex and Decimal Data

Hexadecimal (HEX) digits may be required during programming. To program a HEX digit, press the [*] key while in a programming section that requires a data entry. HEX programming mode activates and the Ready light begins to flash.

The following table indicates which number should be pressed to enter the corresponding HEX digit:

Table 21: Table 19 HEX Digit Programming

Value	Enter	Telephone Dialer
HEX [A]	Press [*][1][*]	Not supported
HEX [B]	Press [*][2][*]	Simulated [*] key
HEX [C]	Press [*][3][*]	Simulated [#] key
HEX [D]	Press [*][4][*]	Dial tone search
HEX [E]	Press [*][5][*]	Two-second pause
HEX [F]	Press [*][6][*]	End of number

The Ready light continues to flash after the HEX digit is entered. If another HEX digit is required press the corresponding number. If a decimal digit is required, press the [*] key again. The Ready light illuminates and the panel returns to regular decimal programming.

Example: To enter 'C1' for a closing by user 1, enter [*] [3] [*], [1]

[*] to enter hexadecimal mode (Ready light flashes)

[3] to enter C

[*] to return to decimal mode (Ready light is on)

[1] to enter digit 1

If an error is made while inputting data, press the [#] key to exit the section. Select that section again and re-enter the information correctly.

When using a Contact ID format, a decimal zero [0] does not transmit for account and reporting codes. Programming a zero [0] tells the alarm system not to send any pulses for that digit. Decimal zero [0] is a filler digit. To make a zero [0] transmit, it must be programmed as a Hexadecimal 'A.'

Example: For the 4-digit account number '4032', enter [4] [*] [1] [*] [3], [2].

[4] to enter the digit 4

[*] to enter Hexadecimal mode (Ready light flashes)

[1] to enter A

[*] to return to decimal mode (Ready light is solid)

[3] to enter the digit 3

[2] to enter the digit 2

Programming Descriptions

This section provides descriptions of all alarm controller options programmable by the installer.

Adding Labels

[000] Label Programming

Zone and other labels on the alarm system can be customized. Program labels locally or download/upload using DLS.

Local label programming is done via a system keypad, as described below.

[000] Language Selection

(LCD keypads only)

Use this section to set the language displayed by LCD keypads. To select a language:

1. Enter Installer Programming: [*][8][Installer Code].
2. Enter programming section [000]>[000].
3. Key in the 2-digit number corresponding to the language required. See below:

01 = English	11 = Swedish	22 = Bulgarian
02 = Spanish	12 = Norwegian	23 = Latvian
03 = Portuguese	13 = Danish	24 = Lithuanian
04 = French	14 = Hebrew	25 = Ukrainian
05 = Italian	15 = Greek	26 = Slovakian
06 = Dutch	16 = Turkish	27 = Serbian
07 = Polish	18 = Croatian	28 = Estonian
08 = Czech	19 = Hungarian	29 = Slovenian
09 = Finnish	20 = Romanian	
10 = German	21 = Russian	

[001]-[128] Zone Labels

Customized labels can be created for each available zone. Labels can be programmed at the keypad or downloaded/uploaded using DLS. The maximum label size is 14 x 2 ASCII characters.

Manual Labels

The following procedure describes how to add zone labels using the LCD keypad:

1. Enter Installer Programming: [*][8][Installer Code].
2. Press [*], scroll to Zone Labels and press [*] again.The first zone is displayed. Alternately, press [000][001].
3. Scroll to the zone label to be programmed or key in the zone number. (e.g., 001 for zone label 1).
4. Scroll to the desired character's location using the[<] [>] keys.
5. Enter the number of the corresponding character group until the desired character is displayed (see the following table).

   Example: Press the "2" key 3 times to enter the letter "**F.**"
   Press the "2" key 4 times to enter the number "**2.**"
   To delete a character, use the [<] [>] keys to move the cursor under the character, then press [0].
   If any key other than [<] or [>] is pressed before [0], the cursor moves one space to the right and deletes that character.

6. Press [#] to save the changes and exit.

Press	To Select/Display
[*]	[SELECT]
[#]	[ESCAPE]
[0]	[SPACE]
[1]	[A], [B], [C], [1]
[2]	[D], [E], [F], [2]
[3]	[G], [H], [I], [3]
[4]	[J], [K], [L], [4]
[5]	[M], [N], [O], [5]
[6]	[P], [Q], [R], [6]
[7]	[S], [T], [U], [7]
[8]	[V], [W], [X], [8]
[9]	[Y], [Z], [9], [0]

Zone Label Options

To access zone label options such as using ASCII characters, changing letter case and clearing the display, press [*] while in Zone Label programming. The Select Option menu is displayed. Use the [<] [>] keys to access the following options:

Option	Description
WORD ENTRY	Provides access to the Word Library, a collection of words commonly used when programming labels. See below for details.
ASCII ENTRY	Used to access uncommon characters or as a primary method for programming labels. 255 character entries are available. Use the [<] [>] keys to scroll through the characters or enter a 3-digit number from 000-255. Press [*] to select a character. for available ASCII characters.
CHANGE CASE	This option toggles the letter between upper case (A, B, C) and lower case (a, b, c).
CLEAR TO END	This option clears the display from the cursor to the end of the display.
CLEAR DISPLAY	This option clears all characters.
SAVE	Saves the new label.

[051] Zone Tamper Label

This label is displayed when a zone is tampered. The maximum label size is 14 x 1 ASCII characters.

[052] Zone Fault Label

This label is displayed when a zone is in fault. The maximum label size is 14 x 1 ASCII characters.

[064] CO Alarm Message

Use this section to program a custom label that is displayed on keypads during a carbon monoxide alarm. The maximum label size is 14 x 2 characters.

[065] Fire Alarm Message

Use this section to program a custom label that is displayed on keypads during a fire alarm. The maximum label size is 14 x 2 characters.

[066] Fail To Arm Event Message

This message is displayed on all partition keypads if a user attempts to arm the system when it is not ready to arm. The message clears after five seconds. The maximum label size is 16 x 2 characters.

[067] Alarm When Armed Event Message

This message is displayed if an alarm occurred while the system was armed. The message is displayed when the system is disarmed and remains on the screen for 5 seconds. Following this, the zones that went into alarm are displayed. The maximum label size is 16 x 2 characters.

[100] System Label

Use this section to program a custom label for the security system. This label is used in the event buffer when system events occur. The maximum label size is 14 x 1 characters.

[101]-[108] Partition 1-8 Labels

Use this section to program a name for each partition for display on partition keypads and event messages. The maximum label size is 14 x 2 characters. Programming for specific instructions on how to program labels.

[201]-[208][001]-[004] Partition Command Output Labels

Use this section to program custom labels for command outputs. These labels are used with output activation events in the event buffer. Enter subsection [201] to [208] to select partition 1 to 8, then enter subsection [001] to [004] to select command output 1 to 4 label.

The maximum label size is 14 x 2 characters. Programming for specific instructions on how to program labels.

[601]-[604] Schedule Labels

Use this section to program custom labels for command output schedules. These labels are used to identify schedules for PGM command outputs 1-4. The maximum label size is 16 characters. Programming for specific instructions on how to program labels.

[801] Keypad Labels

Use this section to create custom labels for keypads on the system. Select 001-016 for keypads 1-16.

[802][001]-[015] HSM2108 Zone Expander Labels

Use this section to create custom labels for Zone expanders on the system. Select 001-015 for zone expanders 1-15.

[803][001]-[016] HSM2208 Output Expander Label

Use this section to create a custom label for the output expander. Select 001 for HSM2208. Select 001-016 for output expanders 1-16.

[806] HSM2HOSTx Label

Use this section to create a custom label for the 2-way wireless transceiver.

[808] HSM2955 Label

Use this section to create a custom label for the 2-way wireless transceiver.

[809][001]-[004] HS2300 Power Supply Label

Use this section to create custom labels for power supplies on the system. Select 001-004 for power supply 1-4.

[810][001]-[004] HS2204 High-Current Output Supply Label

Use this section to create custom labels for high-current output supplies on the system. Select 001-004 for output supply 1-4.

[815] Alternate Communicator Label

Use this section to create a custom label for the alternate communicator.

[820][001]-[016] Siren Labels

Use this section to create custom labels for sirens on the system. Select 001-016 for sirens 1-16.

[821][001]-[008] Repeater Labels

Use this section to create custom labels for wireless repeaters on the system. Select 001-008 for repeater 1-8.

[999][Installer Code][999] Default Labels

This section is used to return all labels to factory settings. Installer code is required to verify deletion.

Zone Setup

The following section describes zone programming options. To program a zone type, first enter section [001] and then enter a 3 digit zone number from 001 - 128. After entering a new zone type for the desired zone number, the keypad will automatically advance to the next zone.

[001] AssignZone Types

A zone type defines how a zone operates within the system and how it responds when triggered.

000 - Null Zone

040 - 24-Hour Gas

001 - Delay 1

041 - 24-Hour CO

002 - Delay 2

042 - 24-Hour Holdup*

003 - Instant

043 - 24-Hour Panic

004 - Interior

045 - 24-Hour Heat

005 - Interior Stay/Away

046 - 24-Hour Medical*

006 - Delay Stay/Away

047 - 24-Hour Emergency

007 - Delayed 24-Hour Fire

048 - 24-Hour Sprinkler*

008 - Standard 24-Hour Fire

049 - 24-Hour Flood

009 - Instant Stay/Away

051 - 24-Hour Latching Tamper

010 - Interior Delay

052 - 24-Hour Non-Alarm

011 - Day Zone

056 - 24-Hour High Temperature

012 - Night Zone

057 - 24 Hour Low Temperature

016 - Final Door Set

060 - 24-Hour Non-Latching Tamper

017 - 24-Hour Burglary

066 - Momentary Keyswitch Arm

018 - 24-Hour Bell/Buzzer

067 - Maintained Keyswitch Arm

023 - 24-Hour Supervisory

068 - Momentary Keyswitch Disarm

024 - 24-Hour Supervisory Buzzer

069 - Maintained Keyswitch Disarm

025 - Auto Verified Fire

071 - Door Bell

027 - Fire Supervisory

072 - Push to Set

* Not UL evaluated

[001]-[128] Select Zone

Every zone on the system must be assigned a zone type. The available zone types are listed below.

– Null Zone

Assign to all unused zones.

– Delay 1

Commonly assigned to primary points of entry. Follows entry delay 1 and exit delay timers (section [005]). Arming the alarm system starts the exit delay timer. After the exit delay has expired, opening the door starts the entry delay timer. During entry delay, the keypad buzzer prompts the user to disarm the system.

– Delay 2

Commonly assigned to secondary points of entry (further from the keypad). Follows entry delay 2 timer (section [005]).

– Instant

Commonly used for perimeter doors and windows, this zone type follows the exit delay. The alarm is triggered instantly if the zone is tripped after the exit delay expires.

– Interior

Commonly assigned to interior motion sensors near a point of entry, such as a foyer or hallway, that must be accessed to reach the keypad. The alarm is activated if the system is armed and a delay type zone (e.g., front door) is not tripped first, or if the entry/exit timer expires before the alarm is disarmed. Otherwise, the zone is instant if tripped.

– Interior Stay/Away

Similar to Interior zone type except that the system bypasses the zone when armed in Stay mode. Commonly used to activate perimeter zones while permitting free movement throughout the interior.

– Delay Stay/Away

Similar to delay 1 except that the zone is bypassed when armed in Stay mode. Commonly used with motion detectors that cover an entry point.

– Delayed 24-Hour Fire

This zone is used with smoke detectors and functions similar to the standard fire zone, except the communicator delays the alarm memory and transmission by 30 seconds. If the alarm is acknowledged by pressing any key, the siren is silenced and the transmission aborted. If the smoke detector is not restored after the alarm has been acknowledged, the siren output activates after 90 seconds and another 30-second delay starts. A code is required to silence the alarm. A tamper or fault causes a fire trouble to log and transmit.

ⓘ **Note:** The supervision options (NC, EOL, DEOL) do not affect the functionality of this zone. The restored state of this zone type is 5k6, the alarm state is short and the trouble state is open.

– Standard 24-Hour Fire

This zone is used with smoke detectors. The siren sounds instantly when the smoke detector is activated. If enabled, the communicator immediately transmits the alarm to the monitoring station. A tamper or fault of this zone type causes a fire trouble to log and transmit.

ⓘ **Note:** The supervision options (NC, EOL, DEOL) do not affect the functionality of this zone. The restored state of this zone type is 5.6k, the alarm state is short and the trouble state is open.

– Instant Stay/Away

Commonly assigned to interior motion sensors. This zone type is bypassed when armed in Stay mode, but functions like an Instant zone [003] when armed in Away mode.

– Interior Delay

Commonly assigned to interior motion sensors. When Away armed, this zone type functions like the Interior zone type. When Stay or night armed, tripping the zone activates entry delay 1. Tripping this zone during exit delay does not cause the system to arm in Away mode, as tripping a regular Delay type zone does.

– Day Zone

Commonly used in areas where immediate notification of entry is desired. When disarmed, tripping this zone activates the keypad buzzer but does not log or report the event. When armed, tripping this zone activates the siren then logs and reports the event.

ⓘ **Note:** An alarm during exit delay causes the siren to activate and remain on when exit delay expires.

– Night Zone

Commonly assigned to interior motion detectors in areas accessed during the night. This zone functions like an Interior Stay/Away zone [005] when armed using any method except the following: If Stay armed, this zone is bypassed; if armed using [*][1], this zone is bypassed.

– Final Door Set (Non CP-01 panels only)

This zone type does not use an exit timer (infinite exit delay). The door must be opened then closed to complete the arming sequence. The arming method determines if infinite exit delay is applied. See the table below.

ⓘ **Note:** Disable Exit Delay Termination with this zone type.

If this zone type is bypassed, the alarm system cannot be Away armed.

Arming Method	Infinite Exit Delay	Arming Mode
User Code	Y	Away
Keyswitch	Y	Away
Away Key	Y	Away
Wireless Key Away	Y	Away
*0 Arm	Y	Away
*9 Arm	N	Stay
Stay Key	N	Stay
Wireless Key Stay	N	Stay
Remote Access/SMS	-	Do Not Use
DLS Arm	N	Away
NAA Arming	N	Away

ⓘ **Note:** When Troubles/Open Zones Cancel Arming is enabled with this zone, any troubles or open zones on the system cancel arming when the zone is tripped and restored.

Due to the potential energy requirements of infinite exit delay, wireless keypads MUST be powered by a transformer.

If a wireless key is used to away arm the system, the door must still be opened then closed to complete the arming sequence. The indoor siren will activate until the exit delay has expired.

– 24-Hour Burglary

This zone type is active at all times. It reports an alarm if the alarm system is armed or disarmed. This zone type sounds the siren for the length of Bell time-out if the audible attribute is enabled.

24-Hour Bell/Buzzer

When the alarm system is armed and this type of zone is tripped, the siren activates for the duration of the bell time-out. If the alarm system is disarmed when this type of zone is tripped, the keypad buzzer activates until an access code is entered.

– 24-Hour Supervisory

This zone is active and reports alarms at all times when tripped. The siren and keypad buzzer do not activate.

ⓘ **Note:** The supervision options (NC, EOL, DEOL) do not affect the functionality of this zone. The restored state of this zone type is 5.6k, the alarm state is short and the trouble state is open. For use with normally open contacts.

– 24-Hour Supervisory Buzzer

When tripped, the keypad buzzer emits a steady tone until a valid access code is entered.

– Auto Verify Fire

(Hardwired smoke detectors)

When the zone is activated, a 30-second delay begins but no fire alarm sounds. If the same zone is activated again up to 60 seconds after the delay expires, the alarm is triggered immediately. If the same zone is activated after 60 seconds, the entire sequence begins again.

If a second fire zone is violated during the auto-verify sequence, both zones a fire alarm is immediately triggered.

(Wireless smoke detectors)

When the zone is activated, a 40-second delay begins. The alarm is triggered if the zone is still faulted after 30 seconds. If the zone is no longer in alarm, an 80-second verification timer begins. If any fire zone is activated during this period, the alarm is triggered.

If another fire zone is activated during the auto verify sequence, both zones go into alarm immediately.

ⓘ **Note:** Wireless smoke detectors used with this zone type must have a built in siren to act as a pre-alert to the system alarm.

ⓘ **Note:** The supervision options (NC, EOL, DEOL) do not affect the functionality of this zone. The restored state of this zone type is 5.6kΩ, the alarm state is short and the trouble state is open.

– Fire Supervisory

When this zone is tripped, the keypad buzzer activates and a supervisory alarm is sent to the monitoring station. A valid access code must be entered to silence the buzzer.

ⓘ **Note:** The supervision options (NC, EOL, DEOL) do not affect the functionality of this zone. The restored state of this zone type is 5.6k, the alarm state is short and the trouble state is open.

– 24-Hour Gas

Instant alarm when activated, audible alarm at default.This zone type may be assigned to any device type.

– 24-Hour CO

This zone type is used with CO detectors. In the event of an alarm, a distinctive siren cadence is sounded. This is followed by a 5-second pause and then repeated. After 4 minutes, the 5-second pause is extended to 60 seconds; however, BTO must be programmed with a value of 5 minutes or higher. The siren is silenced when an access code is entered or the siren times out.

ⓘ **Note:** The supervision options (NC, EOL, DEOL) do not affect the functionality of this zone. The restored state of this zone type is 5k6, the alarm state is short and the trouble state is open. For use with normally open contacts.

– 24-Hour Holdup

Instant alarm when activated, silent alarm at default.

ⓘ **Note:** Not for use in UL listed installations.

– 24-Hour Panic

Instant alarm when activated, audible alarm at default.

– 24-Hour Heat

Instant alarm when activated, audible alarm at default.

ⓘ **Note:** For use with normally closed contacts.

– 24-Hour Medical

Instant alarm when activated, audible alarm at default.

– 24-Hour Emergency

Instant alarm when activated, audible alarm at default.

– 24-Hour Sprinkler

Instant alarm when activated, audible alarm at default.

– 24-Hour Flood

Instant alarm when activated, audible alarm at default.

– 24-Hour Latching Tamper

Instant alarm when activated, audible alarm at default. The alarm system cannot be armed until Installer Programming is entered after the zone is restored.

– 24-Hour Non-Alarm

This zone is active at all times but does not cause an alarm. Zone attributes such as Zone Bypassing and Door Chime affect the functionality of this zone. This zone type can also be assigned to a temperature sensor if indoor/outdoor temperature display is required without temperature warnings or alarm conditions.

–24 Hour High Temperature

This zone type is used with temperature sensors and is activated when the temperature rises above a programmed threshold (set in section [804][xxx][019-020]). Instant alarm when activated, audible alarm at default. This zone type generates an alarm when the system is armed or disarmed.

ⓘ **Note:** This zone type can only be used with PGx905 wireless temperature detectors. The temperature threshold includes a 3 °C (5-6 °F) difference between a given state and its restored condition. For example, an alarm at 6 °C is restored at 3°C (High temperature) or 9°C (Low temperature), depending upon the zone type selected.

The zone type for temperature sensors must be 24 Hour High/Low Temperature in order for the sensor to operate properly.

– 24 Hour Low Temperature

This zone type is used with temperature sensors and is activated when the temperature drops below a programmed threshold (set in section [804][xxx][019-020]). Instant alarm when activated, audible alarm at default. This zone type generates an alarm when the system is armed or disarmed.

ⓘ **Note:** This zone type can only be used with PGx905 wireless temperature detectors.

– 24-Hour Non-Latching Tamper

This zone is always active and reports a tamper condition with no audible alarm when opened or tamper/faulted.

– Momentary Keyswitch Arm

Often used with a keyswitch module*, turning the key alternately arms and disarms the system and silences the alarms. Tampers and faults only initiate their respective trouble sequence. The keypad gives no indication when this zone type is activated.

ⓘ **Note:** With audible alarm active, using the keyswitch when disarmed is the same as entering an access code at the keypad. Using the keyswitch during the first 30 seconds of a delayed fire alarm is the same as pressing a key at the keypad (the 90 second delay starts). Activation of a keyswitch zone arms or disarms the system. Activation of this zone type is NOT logged nor is the Police code transmitted. Bypassed zones of this type are not un-bypassed when the system is disarmed. When the zone is bypassed, a zone bypass event buffer log and communication occurs immediately, NOT when the system is armed.

*Keyswitch module not for use in UL/ULC listed installations.

– Maintained Keyswitch Arm

Often used with a keyswitch module, turning the key (open state) arms the system. Turning the key back (restored state) disarms the system. Tampers and faults only initiate their respective trouble sequence.

ⓘ **Note:** DO NOT use for wireless zones. Activation of the zone does not log or transmit the Police code. Bypassed zones of this type are not un-bypassed when the system is disarmed. When the zone is bypassed, a zone bypass event buffer log and communication occurs immediately, NOT when the system is armed.

With an audible alarm active, using the keyswitch when disarmed is the same as entering an access code at the keypad. Activating this zone type during the first 30 seconds of a delayed fire alarm is the same as pressing a key at the keypad (the 90 second delay starts). If left in the open state, the system does not arm until the zone is restored and tripped again.

– Momentary Keyswitch Disarm

Use with a keyswitch module. Activating and restoring this zone disarms the partition and silences alarms. Tampers or faults do not disarm the zone.

ⓘ **Note:** Do not use as a global zone.

– Maintained Keyswitch Disarm

Used with a maintained keyswitch. Activating this zone disarms the partition.

Tampers or faults on this zone do not disarm the partition.

– Doorbell Zone

This zone type sounds a chime through keypads on the partition when activated. No alarms are generated. Various chime tones can be programmed. Disabling door chime on the partition also disables the chime on this zone.

ⓘ **Note:** Do not use as a global zone.

– Push to Set (Non CP-01 panels only)

Activating this zone starts an infinite exit delay when armed according to the methods described in the table below. To complete the arming sequence, this zone must be activated and restored. Once done, the exit delay timer starts.

Arming Method	Infinite Exit Delay	Arming Mode
User Code	Y	Away
Keyswitch	Y	Away
Away Key	Y	Away
*0 Arm	Y	Away
*9 Arm	N	Stay
Stay Key	N	Stay
Night Key	N	Night

Remote Access/SMS	-	Do Not Use
DLS Arm	N	Away
NAA Arming	N	Away

Do not use exit delay termination with this zone type. Away arming with this zone bypassed prevents arming.

[002] Zone Attributes

Zone attributes are used to customize the operation of zones. When a zone type (section [001]) is programmed, the default zone attribute is automatically assigned.

When programming attributes using LED/ICON keypads:

- Ready light ON: Program attributes [1-8]
- Ready light and Armed light ON: Program attribute [9-16] (press [1] for option 9, press [6] for option 14 etc.)
- Press [9] to switch between attributes [1-8] and attributes [9-16].

ⓘ **Note:** These attributes override default settings. Do NOT change fire zone attributes from their default settings.

[001]-[128] Select Zone

The attributes listed below can be enabled and disabled for each zone.

Assign zone attributes:

[002]>[001]-[128]>Select one of the following zone attributes:

1 – Bell Audible

2 – Bell Steady

3 – Chime Function

4 – Bypass Enabled

5 – Force Arm

6 – Swinger Shutdown

7 – Transmission Delay

8 – Burglary Verification

9 – Normally Closed

10 – Single EOL

11 – Double EOL

12 – Fast/Normal Loop Response

13 – Zone 2-way Audio Activation

14 – Hold Up Verification

– Bell Audible

ON: An alarm activates the siren.

OFF: Silent alarm.

– Bell Steady

ON: Siren output is steady when in alarm.

OFF: Siren output pulses when in alarm.

– Door Chime

ON: The keypad chimes when the zone is open and when the zone is secured.

OFF: The zone does not chime.

– Bypass Enabled

ON: The zone can be manually bypassed.

OFF: The zone cannot be bypassed.

ⓘ **Note:** Bypass shall not be enabled for fire zones.

– Force Arm

ON: The system can be armed with the zone open. The zone is temporarily bypassed and, when secured, is monitored by the system.

ⓘ **Note:** When open zones cancel arming is enabled [021][7], the system can begin arming with an open, force armable zone, but if the zone is still open when the exit delay timer expires, the arming will be cancelled.

OFF: The system cannot be armed if the zone is open.

– Swinger Shut Down

ON: When the zone goes into alarm for the number of times programmed in the Swinger Shutdown Counter ([377] Communication Variables), it shuts down with no further transmissions sent to the monitoring station. The siren follows swinger shutdown if programmed.

OFF: Swinger shutdown is disabled. All alarms are transmitted.

– Transmission Delay

ON: Reporting of zone alarms is delayed for the programmed time in section 377 ([377] Communication Variables). If a valid access code is entered within this time, no alarm signal is communicated.

OFF: When an alarm occurs, the reporting code is transmitted immediately.

Burglary verification

The PowerSeries Neo system includes cross zone and sequential detection features that require an activation on two or more zones, within a given time period, to generate a confirmed alarm and immediate police response.

ⓘ **Note:** This feature must be enabled and configured by your installer.

– Normally Closed (NC)

ON: The zone requires a normally closed loop.

OFF: The zone follows programming in section [013] option 2.

See note after option 11.

– Single End of Line (SEOL) Resistors

ON: The zone requires a single end-of-line resistor (5.6K).

OFF: The zone follows programming in section [013] option 2.

See note after option 11.

– Double End of Line (DEOL)

ON: The zone requires two end-of-line resistors (5.6K).

OFF: The zone follows programming in section [013] option 2.

ⓘ **Note:** If more than 1 option is enabled for options 09, 10, and 11 the lowest attribute number takes precedence. If options 09 and 10 are both enabled the zone follows the normally closed loop configuration.

– Fast Loop/Normal Loop Response

ON: Follows a fast loop response of 50ms.

OFF: Follows a normal loop response as programmed in the Zone Loop Response Time section.

– 2-Way Audio Attribute

ON: Panel is able to initiate a 2 way audio session.

OFF: Only the microphone turns on, initiating a a Listen-in only session. The speaker remains off.

– Hold Up Verification

ON: An alarm from zones of this type can contribute to a verified hold up alarm. Use this attribute with Panic and Hold Up zones.

OFF: An alarm from zones of this type does not contribute to a verified hold up alarm. The zone does not cause the hold up verification timer to start counting down, or generate a verified hold up if the alarm is detected while the timer is running.

System Times

This section describes how to program various timers applicable to the entire alarm system.

[000] – System Area

Bell Cutoff Time

System sirens follow this timer. Fire alarms follow this timer if section [014] option 8 (Fire Bell Continues Option) is off. System tampers follow this timer. The bell cutoff time is programmed in minutes. Valid entries are 001 to 255 minutes.

Keypad buzzer alarms do not follow this timer.

Bell Delay Time

The Bell Delay Timer determines how long the bell will be delayed after a zone alarm event. Valid entries are 000-255 where 000 disables this feature.

Burglary Verification Timer

If another zone with the Burglary Verification attribute enabled is violated within the duration of this timer, a burglary verified event is communicated and logged. “Burglary Verified” is displayed on the keypad when the system is disarmed.

The burglary verification timer is programmed in minutes. Valid entries are 000 to 255 minutes.

Holdup Verification Timer

A holdup alarm is immediately communicated to the monitoring station and the holdup verification timer starts. A programmable counter determines the number of additional holdup events that must occur before the timer expires to create a verified holdup event. Once this happens, the holdup event is logged and communicated.

ⓘ **Note:** Not for use with UL/ULC listed installations. 000 disables this feature.

Zone Loop Response Time

Loop response time is a 3-digit entry from 005 to 255 programmed in 10ms increments. The minimum available loop response time is 50ms (e.g., program 005 for 50ms).

Automatic Clock Adjust

This value adds or subtracts seconds from the system clock at the end of each day to compensate for inaccuracies. To determine the adjustment value, monitor the time lost or gained by the alarm system over a period of time and calculate the average gains or loses.

Example #1: The clock loses an average of 9 seconds per day. Program the alarm controller to adjust the clock by 51 seconds for the last minute of each day. This speeds up the alarm controller's clock by 9 seconds, correcting the problem.

Example #2: The clock gains an average of 11 seconds per day. Program the alarm controller to adjust the clock by 71 seconds for the last minute of each day. This slows down the alarm controller's clock by 11 seconds, correcting the problem.

If the Auto-arm time is set for 23:59, any change to the Clock Adjust option will directly affect the Auto-arm pre-alert time.

[001]-[008] Partition 1-8 Timers

The following timers can be applied to each partition.

ⓘ **Note:** For UL installations, the Entry Delay plus the Communications Delay must not exceed 60 seconds.

Entry Delay 1:

This value determines the entry delay time for delay 1 type zones. Valid entries are 001 to 255 seconds.

Entry Delay 2:

This value determines the entry delay time for delay 2 type zones. Valid entries are 001 to 255 seconds.

ⓘ **Note:** The system follows the entry timer that activates first.

Exit Delay:

This value determines the exit delay time when arming the system. During exit delay, both the Ready and Armed LEDs are on. When the exit delay expires, both LEDs turn off.

ⓘ **Note:** European products will only activate the armed LED at the end of exit delay.

Settle Delay:

This timer enables a programmable, short duration bypass of all zones on the partition at the time of arming. It allows motion detectors to restore when the system is armed to help prevent false alarms.

The typical value for this timer is 5 seconds, but can be increased if false alarms persist. Program 000 for no settle delay.

The settle delay duration is programmed in seconds. Valid entries are 000 to 010 seconds.

[900] – Bell Delay Partition Mask

This option enables or disables the Bell Delay feature for individual partitions. When the option is enabled, Bell Delay is applied to the selected partition during alarm conditions. When the option is disabled, Bell Delay is not applied. The default setting is (Y): enabled.

[901]/[902] – Daylight Savings Begin/End

Daylight Begin [001] and Daylight End [002]:

Set the date and time daylight savings starts and ends.

Month

Valid entries are 001-012 (January to December).

Week

Valid entries are 000-005.

Enter “000” to program a specific date (1-31) in the Day field. Enter 001-005 to program the specific week of the month. 005 is the last week of the month.

Day

1-31 (if 000 is programmed in the Week field). 0-6 (Sunday to Saturday) if 001-005 is programmed in the Week field.

Hour

Valid entries are 00-23 hours. This is the time of day to advance or turn the clock back.

Increment

Valid entries are 1 or 2 hours. This is the number of hours to advance or turn the clock back.

Access Codes

This section is used by installers to program the installer code, the master code and the maintenance code. For information on programming other access codes, [*][5] Program Access Codes.

[006] Installer Defined Access Codes

This is the base menu used by installers to program the installer code [001], the master code [002] and the maintenance code [003]. See below for details.

[001] – Installer Code

This code is used by the installer to gain access to Installer Programming [*][8]. Users with this access code have access to all levels of system programming.

ⓘ **Note:** For EN50131-1 approved installations the installer code cannot change the master code or any other level 3 codes.

[002] – Master Code

This code is used by the master user, a person designated to perform operational tasks beyond those of the standard user. The master code provides access to functionality in the [*][5] and [*][6] menus.

[003] – Maintenance Code

This code is usually assigned temporarily to maintenance personnel who must deactivate the alarm to enter the premises. The maintenance code can arm and disarm the system, but does not grant access to any other functionality.

[005] – Code Version

A programmable 3 'digit' pin is required to calculate the 5 'digit' remote reset code. The range of the pin is 000-255 in

decimal. The default value of the pin code is 000.

[007] - [008] PGM Configuration

About this task:
This section describes how to set up and configure programmable outputs.

PGMs are used to send electrical current to external devices such as lights and sirens, usually when an alarm event occurs. The alarm controller provides up to three 50mA PGMs and one 300mA PGM. PGM outputs can be expanded using the optional 8-output expander (HSM2208) and the 4 high-current output expander (HSM2204).
Programming an output is a four-step process:

1. Program the PGM
2. Assign the PGM to a partition.
3. Assign an output attribute.
4. Assign an output option.
   [011] PGM Configuration Options for PGM slot alignment.

[007] PGM Programming

This is the base menu used by the installer to assign PGMs to the main bell and a partition.

[000] Main Bell Partition Assignment

This programming section is used to define which partitions activate the main bell when they go into alarm. All partitions are selected by default.

[001]-[164] PGM Partition Assignment

This option enables the installer to assign each PGM output to a partition. To assign a PGM to a partition, first select the PGM output (PGM 001-164), then select the partition (1-8).

ⓘ **Note:** This field is only supported by PGM types that have multiple partition capabilities (e.g., command outputs, away arming). It does not affect system outputs (e.g., ground start pulse).

[008] PGM Timer Programming

[000] PGM Minutes/Seconds

This option determines if the timer is in minutes or seconds.

[001]-[164] PGM Timer

This timer programs the duration (in seconds or minutes) that PGMs 1-164 activate if programmed to follow the PGM Timer.

Select option 001-164 for PGM 1-164.

This option does not affect outputs programmed as Sensor Reset.

[009] PGM Types

The output types described in this section can be assigned to alarm controller and output expander module PGMs. Each alarm controller supports up to 2 or 4 PGMs and can be expanded using HSM2208 output expander and HSM2204 High-Current output modulemodules. PGM attributes are defined in section [010] PGM Attributes.

[001]-[164] Select PGM

100 - Null PGM

This option deactivates the PGM output

101 - Burglary and Fire Bell Follower

This PGM output follows:

- Fire pre-alerts

- Temporal three fire signal (if enabled)
- All audible burglary and fire alarms by partition
- Bell cut-off time
- Bell squawk conditions
- Audible exit fault

This output activates when the alarm output is active and turns off when the alarm output is silenced. The siren pattern matches the programmed cadence for the zone that went into alarm. Cadence priority is as follows:

- fire alarm cadence
- CO alarm cadence
- other alarm cadences

The main siren still activates for all alarms.

102 - Delayed Fire and Burglary

This output type operates the same as the Burglary and Fire Bell Follower (PGM type 01), but does not activate until the transmission delay time expires.

When a zone with transmission delay enabled is tripped, the Bell, Regular Fire and Burglary PGMs activate. At the end of the transmission delay, the delayed Fire and Burglary output activates.

This PGM is usually used to control outdoor sirens. If a false alarm occurs, the user has time to disarm the system before the external sirens activate.

ⓘ **Note:** If a zone alarm occurs but does not follow transmission delay, this PGM activates immediately, even if transmission delay is active for a different zone alarm.

This output activates for audible exit fault and does not interfere with the operation of any other programmable output.

103 - Sensor Reset [*][7][2]

This output is normally active and deactivates for 5 seconds when a [*][7][2] fire reset command is entered or when an auto verified fire alarm is detected. This option is used to reset power for latching smoke detectors. The keypad buzzer does not sound for the 5-second period. Smoke Detector Wiring for instructions on wiring smoke detectors.

104 - 2-Wire Smoke

When this PGM is programmed, the onboard PGM functions as an input instead of an output. 2-wire smoke detectors can be connected to this input, which means that a zone input does not need to be used.

The PGM is also supervised, and a trouble condition is generated if a 2.2KΩ resistor is not present between the PGM terminal and Aux+.

The 2-wire smoke detector input creates an instant and latching alarm.

109 - Courtesy Pulse

Courtesy pulse causes an output to activate for the entry and exit times, plus 2 minutes. This option is typically used to activate a courtesy light near the exit door for the duration of the entry/exit times.

111 - Keypad Buzzer Follow

PGM output activates with the keypad buzzer when triggered by the events below. The PGM output remains active for the duration of the keypad buzzer.

- 24-hour supervisory buzzer zone alarm
- Auto-arm and no activity arming pre-alert.
- No activity arm pre-alert
- Entry delay
- Audible exit fault
- Audible exit delay
- Door chime

This PGM type does not activate for local key presses or trouble beeps.

114 - Ready to Arm

This PGM activates when the system is ready to arm (all non-force armed zones on the system are restored). The PGM output de-activates when an access code is entered to arm the system and the exit delay begins. This PGM operates as described during walk test mode (if all zones are restored).

115 - System Armed Status

This output activates when all selected partitions are armed (end of the exit delay) in either Stay or Away modes. The output de-activates when the system is disarmed.

116 - Away Armed Status

This PGM switches on when the system is armed with stay/away zones activated. If the system is armed with the stay/away zones always active, then the away output is active.

117 - Stay Armed Status

This PGM output activates if the system is armed with the stay/away zones bypassed.

120 - Away Armed with No Zone Bypasses Status

When assigned to a single partition, this PGM output activates when the system is armed with stay/away and night zones active, and no zones are bypassed.

If assigned to multiple partitions, all partitions must be armed in away mode with no bypassed zones before the PGM activates. If a force armable zone is violated at the time of arming, the PGM does not activate. When the zone is restored, the PGM activates.

121-124 – Command Outputs 1-4

Command Outputs 1-4 are user-activated by entering [*] [7] [1-4] at any keypad. When an output is activated, three acknowledgment beeps are sounded.

PGM outputs of this type can be programmed to follow a pre-defined schedule (programmed in section [601]-[604] Schedule Labels). Even if the output follows a schedule it can be manually turned ON, OFF or follow the schedule through [*][7].

To select a schedule for these PGM outputs to follow, [009] PGM Types

129 - Partition Status Alarm Memory

This feature is intended to be used on a keyswitch plate, with a light controlled by this PGM to indicate system status. When the partition is armed, the output activates (steady) at the:

NA

beginning of exit delay

EN

end of exit delay.

If an alarm occurs on the armed partition, the output flashes for the remainder of the armed period. If an alarm occurs on a disarmed partition (24 Hr Zone), the output flashes until the alarm is acknowledged.

This output will not activate during a walk test or for FMP key, holdup or audible/silent PGM2 input alarms.

132 - Holdup Output

When a Holdup zone (Type [042]) goes into alarm, this output activates until the partition is either armed (access code, keyswitch, [*][0], etc.) or disarmed. A tamper or fault on a holdup zone type does not activate this output. This output does not activate in Walk Test mode. If a global holdup alarm occurs, each partition with holdup zones assigned must be armed or disarmed before the holdup output deactivates. If holdup alarms occur on multiple partitions, an access code must be entered at each partition before the output deactivates.

ⓘ **Note:** Not for use with UL/ULC listed installations.

134 - 24-Hour Silent Input (PGM 2)

With this input the keypad does not indicate an alarm, the siren remains silent, and the signal is sent to the central station. This input does not follow swinger shutdown. A 2.2KΩ EOL resistor is required for this input (to Aux+). If a short or open occurs, an alarm is generated.

ⓘ **Note:** UL Not for use with UL installations.

132 - 24-Hour Audible Input (PGM 2)

LCD keypads indicate that the system is in alarm, the siren sounds for the duration of bell timeout, and the signal is sent to the central station. This input does not follow swinger shutdown. A 2.2KΩ EOL resistor is required for this input (to Aux+). If a short or open occurs, an alarm is generated for all partitions and sirens. PGM partition assignment does not affect this PGM type.

146 - TLM and Alarm

This output activates when a telephone line fault condition is present AND an alarm occurs. The output remains active until an access code is entered to disarm or the TLM trouble is restored. The output activates for all audible and silent alarms (except duress) if a TLM trouble is present. If an alarm activates this output in the disarmed state, it will deactivate when the system is armed or the telephone line is restored. This output type also activates if alarms are in memory (not only for

currently active alarms) when the TLM fault occurs. The alarms in memory must have exceeded the bell timeout.

147 - Kissoff

This PGM output activates for two seconds after the alarm system receives a kissoff signal from the central station.

148 - Ground Start

This output activates for two seconds before the alarm system attempts dialing to obtain a dial tone on Ground Start telephone equipment. Two 2-second pauses must be inserted at the beginning of the telephone number when using this option.

149 - Alternate Communicator

This output can be used to trigger inputs on a third-party communicator for the purpose of triggering alarm communications to a monitoring station. This output can be programmed to activate when any of the following system events (alarms) occur on the system:

- Fire (Fire Key, Fire Zones)
- Panic (Panic Key and Panic Zones)
- Burglary (Delay, Instant, Interior, Stay/Away and 24-hour Burglary Zones)
- Opening/Closing Events
- Zone Auto-Bypass. (Please 149 - Alternate Communicator for details).
- Medical (Medical Key, Medical and Emergency Zones)
- Burglary Verified
- Opening After Alarm
- Emergency Alarm
- Duress Alarm
- Holdup Verified

In the armed state, this output deactivates when the system is disarmed. If an alarm activates this output in the disarmed state, the output deactivates if a valid access code is entered within the bell timeout or if the system is armed after the bell timeout has expired.

This output activates for silent and audible alarms or medical conditions only. It will not activate during pre-alert or delays.

ⓘ **Note:** The PGM attributes for this option, programmed in section [010], differ from the standard selection of attributes normally programmed.

ⓘ **Note:** When this PGM is configured to provide Opening/Closing status, the PGM must be programmed as a timed output, not latching.

155 - System Trouble

This output can be programmed to activate when any of the following trouble conditions are present:

- Service Required
- Loss of Clock
- DC Trouble
- Bus Voltage

- AC Trouble
- Device Fault
- Device Low Battery
- Device Tamper
- RF Delinquency
- Module Supervisory
- Module Tamper
- Communications
- Not Networked

This output deactivates when all of the selected trouble conditions are cleared.

156 - Latched System Event (Strobe)

This output can be used to notify the home owner, before they enter the premises, that an alarm has occurred. This output can be programmed to activate when any of the following alarms occur on the system:

- Burglary (Delay, Instant, Interior, Stay/Away and 24-Hour Burglary Zones)
- Fire (Fire Key, Fire Zones)
- Panic (Panic Key and Panic Zones)
- Medical (Medical Key, Medical and Emergency Zones)
- Supervisory (Supervisory, Freezer and Water Zones)
- Priority (Gas, Heat, Sprinkler and 24-Hour Latching Zones)
- Holdup (Holdup zones)
- Output follows pulse timer ([008] PGM Timer Programming).
- Duress
- Emergency
- CO Alarm
- Fire Supervisory
- Fire trouble

This output does not activate during pre-alert or delays.

In the armed state, the output deactivates only once the system is disarmed.

If an alarm activates this output in the disarmed state, the output deactivates when a user enters a valid access code during bell timeout. The output also deactivates if someone arms the system after the bell timeout has expired.

If assigned to a single partition, the output activates when an enabled alarm event occurs on the assigned partition. When assigned to multiple partitions, the output activates when an alarm occurs on any partition and, if configured to latch, will deactivate when any partition is disarmed. (or a valid disarming procedure is used).

157 - System Tamper

This output activates when any tamper condition is present and deactivates when all tamper conditions are cleared (if set for steady operation). If set for a pulsed operation, the output deactivates when the PGM Output timer expires. These tampers include zone tampers (DEOL), case tampers, TLM trouble, RF jam, and all zone and device tampers.

Note: This PGM does not activate for alternate communicator fault.

161 - DC Trouble

This output activates when one of the following low battery conditions is detected:

- Alarm controller low or absent battery
- Module low or absent battery
- Wireless zone low battery
- Wireless keypad low battery
- Wireless siren low battery
- Wireless key low battery

The output can be configured to follow the state of the low battery trouble(s) or it can activate for a period of time and automatically restore.

165 - Proximity Tag Used

This output activates when the selected proximity tag is presented.

Assign this output to a user by entering a user number from 0002 to 1000. To enable this attribute for all proximity tags, enter 000 in PGM attribute [011]. [007] - [008] PGM Configuration.

166 - Partition Prox Used

This output activates when a proximity tag is presented at a system keypad equipped with a proximity tag reader, including global keypads. The proximity tag must be assigned to a valid user and the PGM must be assigned to a partition that the user has permission to access.

Assign this output to a partition in section [007], PGM Partition Assignment. Use section [011], PGM Configuration Options, to assign a schedule. When [011] is programmed as 000, the output activates any time a valid proximity tag is presented. When [011] is programmed as 1-4, the output activates only when the proximity tag is presented during the scheduled interval.

175 - Bell Status and Programming Access Output

This PGM activates when the siren, Installer Programming mode or DLS/SA is active. It deactivates after bell timeout, when Installer Programming is exited or when DLS/SA programming is disconnected.

176 - Remote Operation

This output is activated and deactivated remotely on command from DLS software.

Note: Not for use with UL/ULC listed installations.

184 - Open After Alarm

This output activates when the system has been disarmed after an alarm. It deactivates when a valid user code is entered or when the PGM Output timer expires.

200 - Zone Follower - PGM By Zone

This option allows the PGM to activate when the assigned zone is opened and deactivate when the zone is restored or, if programmed, when a valid access code is entered. This PGM follows the state of the assigned zone, regardless of the partition the zone or PGM is assigned to.

To program which zone the PGM will follow, [011] PGM Configuration Options.

201-216 – Zone Follower (Zones 1-128)

This output type is assigned to a group of zones and is normally activated, but deactivates when a zone is tripped. Zones are assigned to this output in the following groups:

201 –	Zones 1-8	209 –	Zones 65-72
202 –	Zones 9-16	210 –	Zones 73-80
203 –	Zones 17-24	211 –	Zones 81-88
204 –	Zones 25-32	212 –	Zones 89-96
205 –	Zones 33-40	213 –	Zones 97-104
206 –	Zones 41-48	214 –	Zones 105-112
207 –	Zones 49-56	215 –	Zones 113-120
208 –	Zones 57-64	216 –	Zones 121-128

If multiple zones are enabled, any active zone in that group triggers the output. The PGM will not activate again until all zones are restored.

[010] PGM Attributes

The following options are used to program the operating characteristics of the main bell and PGM outputs.

[000] Main Bell Mask

This programming section is used to configure the types of audible alarms that trigger the main bell output on the alarm controller. All options are selected by default.

Fire Alarm

ON: Fire alarm ([F] key, Fire zones) activates the main siren.

OFF: Fire alarm does not activate the main siren.

CO Alarm

ON: CO alarm activates the main siren.

OFF: CO alarm does not activate the main siren.

Burglary Alarm

ON: Burglary alarm (Delay, Instant, Interior, Stay/Away, Night, Interior Delay, Instant Stay/Away, Day, 24-hour Burglary) activates the main siren.

OFF: Burglary alarm does not activate the main siren.

24-Hour Flood Alarm

ON: Main bell activates in the event of a 24-Hour Flood alarm.

OFF: Main bell does not activate in the event of a 24-Hour Flood alarm.

Bell Squawks

ON: Squawks activate the main siren. Bell squawks must be enabled to use the following options:

- Bell Squawk on arm (single)
- Bell Squawk on disarm (double)
- Bell Duration Auto-Arm (single every second)
- Bell Squawk on Exit (single every second)

- Bell Squawk on Entry (single every second)
- Bell Squawk on Trouble (single every 10 seconds)

OFF: Squawks do not activate the main siren.

[001]-[164] PGM 001-164 Attributes

The following PGM attributes can be assigned to a PGM. Each attribute has various toggle options, depending on the PGM type selected (section [009]).

101 - Fire and Burglary

01 - True Output/Inverted

ON: deactivated during normal operation. Activated when triggered.

OFF: active during normal operation. Deactivated when triggered.

102 - Delay Fire and Burglary

01 -True Output/Inverted

ON: deactivated during normal operation. Activated when triggered.

OFF: active during normal operation. Deactivated when triggered.

103 - Sensor Reset [*][7][2]

01 - True Output/Inverted

ON: deactivated during normal operation. Activated when triggered.

OFF: active during normal operation. Deactivated when triggered.

03 - Access Code Required / No Code Required

ON: Access code required for activation

OFF: No access code required for activation

109 - Courtesy Pulse

01 - True Output/Inverted

ON: deactivated during normal operation. Activated when triggered.

OFF: active during normal operation. Deactivated when triggered.

111 - Keypad Buzzer Follow

01 - True Output/Inverted

ON: deactivated during normal operation, activated when triggered.

OFF: activated during normal operation, deactivated when triggered.

02 - Timed Output

ON: output remains active until the PGM output timer expires.

OFF: output remains active until the buzzer condition ends.

09 - Entry Delay

ON: activates on entry delay.

OFF: does not activate on entry.

10 - Exit Delay

ON: activates on exit delay.

OFF: does not activate on exit delay.

11 - Door Chime

ON: activates when chime is enabled.

OFF: does not activate when chime is enabled.

12 - Keypad Buzzer Zone

ON: activates when keypad buzzer goes into alarm.

OFF: does not activate when keypad buzzer goes into alarm.

13 - Audible Exit Fault

ON: activates when audible exit fault pre-alert begins.

OFF: does not activate when audible exit fault pre-alert begins.

14 - Auto-Arm Pre-Alert

ON: activates when auto-arming pre-alert begins.

OFF: does not activate when auto-arming pre-alert begins.

114 - Ready To Arm

True Output/Inverted

ON: deactivated during normal operation. Activated when triggered.

OFF: active during normal operation. Deactivated when triggered.

115 - Armed Status

01 - True Output/Inverted

ON: deactivated during normal operation. Activated when triggered.

OFF: active during normal operation. Deactivated when triggered.

116 - Armed Away Mode

01 - True Output/Inverted

ON: deactivated during normal operation. Activated when triggered.

OFF: active during normal operation. Deactivated when triggered.

117 - Armed Stay Mode

01 - True Output/Inverted

ON: deactivated during normal operation. Activated when triggered.

OFF: active during normal operation. Deactivated when triggered.

121-124 – Command Output 1-4

01 - True Output/Inverted

ON: deactivated during normal operation, activated when triggered.

OFF: activated during normal operation, deactivated when triggered.

02 - Timed Output / Latched Output

ON: output remains active until the PGM output timer expires.

OFF: output remains active until an access code has been entered.

03 - Access Code Required / No Code Required

ON: access code required for activation.

OFF: no access code required for activation.

129 - Partition Status Alarm Memory

01 - True Output/Inverted

ON: deactivated during normal operation. Activated when triggered.

OFF: active during normal operation. Deactivated when triggered.

132 - Holdup Output

01 - True Output/Inverted

ON: deactivated during normal operation. Activated when triggered.

OFF: active during normal operation. Deactivated when triggered.

146 - TLM Alarm

01 - True Output/Inverted

ON: deactivated during normal operation. Activated when triggered.

OFF: active during normal operation. Deactivated when triggered.

147 - Kissoff Output

01 - True Output/Inverted

ON: deactivated during normal operation. Activated when triggered.

OFF: active during normal operation. Deactivated when triggered.

148 - Ground Start

01 - True Output/Inverted

ON: deactivated during normal operation. Activated when triggered.

OFF: active during normal operation. Deactivated when triggered.

149 - Alternate Communicator

01 - True Output/Inverted

ON: deactivated during normal operation, activated when triggered.

OFF: activated during normal operation, deactivated when triggered.

02 - Timed Output / Latched Output

ON: output remains active until the PGM output timer expires.

OFF: output remains active until an access code has been entered.

04 - Fire alarm

⚠ **WARNING:** If the fire alarm sounds, follow your emergency evacuation plan immediately.

05 - Panic Alarm

ON: activates with panic alarm, [P] key, panic zones.

OFF: does not activate with panic alarm.

06 - Burglary Alarm

ON: activates with burglary alarm.

OFF: does not activate with burglary alarm.

07 - Open/Close

ON: activates with opening or closing.

OFF: does not activate with opening or closing.

08 - Zone Auto-Bypass

ON: activates when a zone is automatically bypassed.

OFF: does not activate when a zone is automatically bypassed.

09 - Medical Alarm

ON: activates with medical alarm, [+] key, medical zones.

OFF: does not activate with medical alarm.

10 - Burglary Verified

ON: activates with burglary verified alarm (or police code).

OFF: does not activate with burglary verified alarm.

11 - Open After Alarm

ON: activates when the system is disarmed with an alarm in memory.

OFF: does not activate when the system is disarmed with an alarm in memory.

12 - Emergency Alarm

ON: activates with zone emergency alarm.

OFF: does not activate with zone emergency alarm.

13 - Duress Alarm

ON: activates with duress alarm.

OFF: does not activate with duress alarm.

14 - Hold Up verified

ON: activates when a verified holdup event is detected.

OFF: does not activate when a verified holdup event is detected.

155 - System Trouble

01 - True Output/Inverted

ON: deactivated during normal operation, activated when triggered.

OFF: activated during normal operation, deactivated when triggered.

02 - Timed Output / Latched Output

ON: output remains active until the PGM output timer expires.

OFF: output remains active until an access code has been entered.

04 - Service Required

ON: activates on service required trouble condition.

OFF: does not activate on service required trouble condition.

05 - Loss of Clock

ON: activates on loss of clock trouble condition.

OFF: does not activate on loss of clock trouble condition.

06 - DC Trouble

ON: activates if a panel low or no battery trouble is detected, or if an HSM2204/2300 1-4 low or no battery trouble is detected.

OFF: does not activate on DC Trouble condition.

07 - Bus Voltage

ON: activates when a system module has measured a low Aux voltage.

OFF: does not activate for a module low voltage trouble.

08 - AC Trouble

ON: activates when any system device detects an AC Failure condition.

OFF: does not activate for AC Failure conditions.

09 - Device Fault

ON: activates if one of the following device fault conditions is present:

- zone 001 – 128 fault
- keypad 01 – 16 fault
- siren 01 – 16 fault
- repeater 01 – 08 fault
- fire trouble
- CO trouble
- gas trouble
- heat trouble
- freeze trouble
- probe disconnected trouble
- self test trouble

OFF: does not activate if a device fault condition is present.

10 - Device Low Battery

ON: activates if any of the following device low battery conditions is present:

- zone 001 – 128
- keypad 01 – 16
- siren 01 – 16
- repeater 01 – 08
- user 01 – 32 (wireless keys)

OFF: does not activate if a device low battery condition is present.

11 - Device Tamper

ON: activates if any of the following device tamper conditions is present:

- zone 001 – 128
- keypad 01 – 16
- siren 01 – 16
- repeater 01 – 08

OFF – does not activate if a device tamper condition is present.

12 - RF Delinquency

ON: activates if any of the following RF delinquency troubles is detected:

- zone 001 – 128
- keypad 01 – 16
- siren 01 – 16
- repeater 01 – 08

OFF – does not activate if an RF delinquency condition is present.

13 - Module Supervisory

ON – activates if any of the following module supervisory troubles is detected:

- HSM2HOST
- keypad 01 – 16
- zone expander 01 – 15
- HSM2204 1 – 4
- HSM2300 1 – 4
- HSM2208 01 – 16

OFF – does not activate if a module supervisory trouble is detected.

14 - Module Tamper

ON – activates if any of the following module tamper conditions is present:

- HSM2HOST
- Keypad 01 – 16
- Zone expander 01 – 15
- HSM2204 1 – 4
- HSM2300 1 – 4
- HSM2208 01 – 16 tamper troubles

OFF – does not activate if a module tamper condition is present.

15 - Communications

ON – activates if any of the following communications conditions is present:

- TLM trouble
- FTC receiver 1 – 4
- SIM Lock trouble
- Cellular Trouble
- Ethernet Trouble
- Receiver 1 – 4 absent
- Receiver 1 – 4 supervision trouble
- SMS Configuration trouble
- Alt comm. Fault.

OFF – does not activate if a communications trouble condition is present.

16 - Not Networked

ON – activates if any of the following not networked conditions is present:

- Zone 001 – 128
- Keypad 01 – 16
- Siren 01 – 16
- Repeater 01 – 08
- User 01 – 1000 (wireless keys) not networked troubles

OFF – does not activate if a not networked trouble condition is present.

156 - Latched System Event

01 - True Output/Inverted

ON: deactivated during normal operation. Activated when triggered.

OFF: activated during normal operation. Deactivated when triggered.

02 - Timed Output / Latched Output

ON: output remains active until the PGM output timer expires.

OFF: output remains active until an access code has been entered.

04 - Fire Alarm

ON: activates with fire alarm, [F] key, fire zones, 2-wire smoke.

OFF: does not activate with fire alarm.

05 - Panic Alarm

ON: activates on panic alarm (audible or silent).

OFF: does not activate on panic alarm.

06 - Burglary Alarm

ON: activates on burglary alarm.

OFF: does not activate on burglary alarm.

07 - Medical Alarm

ON: activates on medical alarm.

OFF: does not activate on medical alarm.

08 - Supervisory

ON: activates on supervisory alarm.

OFF: does not activate on supervisory alarm.

09 - Priority Event

ON: activates on priority alarm.

OFF: does not activate on priority alarm.

10 - Holdup

ON: activates on holdup alarm.

OFF: does not activate on Holdup alarm.

11 - Duress Alarm

ON: activates on duress alarm.

OFF: does not activate on duress alarm.

12 - Emergency Alarm

ON: activates on emergency alarm.

OFF: does not activate on emergency alarm.

13 - Fire Supervisory

ON: activates on fire supervisory alarm.

OFF: does not activate on fire supervisory alarm.

14 - Fire Trouble

ON: activates on fire trouble condition.

OFF: does not activate on fire trouble condition.

15 – CO Alarm

ON: activates on CO alarm.

OFF: does not activate on CO alarm.

157 - System Tamper

01 - True Output/Inverted

ON: deactivated during normal operation. Activated when triggered.

OFF: activated during normal operation. Deactivated when triggered.

09 - System/Module Tampers

ON: activates when any module tamper condition occurs.

OFF: does not activate when any module tamper condition occurs.

10 - Zone Tampers

ON: activates when any zone tamper condition occurs.

OFF: does not activate when zone tamper conditions occur.

161 - DC Trouble

01 - True Output/Inverted

ON: deactivated during normal operation. Activated when triggered.

OFF: activated during normal operation. Deactivated when triggered.

02 - PGM Timer

ON: output remains active until an access code is entered or certain criteria have been met, depending on the PGM type.

OFF: output remains active until the PGM output timer expires.

09 - Battery Low

ON: activates when a low battery trouble occurs.

OFF: does not activate when a low battery trouble occurs.

10 - Battery Absent

ON: activates when a battery absent trouble occurs.

OFF: does not activate when a battery absent trouble occurs.

165 - Prox Used

01 - True Output/Latched Output

ON: deactivated during normal operation. Activated when triggered.

OFF: activated during normal operation. Deactivated when triggered.

166 - Partition Prox Used

01 - True Output/Latched Output

ON: deactivated during normal operation. Activated when triggered.

OFF: activated during normal operation. Deactivated when triggered.

175 - Bell Prog Access

01 - True Output/Inverted

ON: deactivated during normal operation. Activated when triggered.

OFF: activated during normal operation. Deactivated when triggered.

176 - Remote Operation

01 - True Output/Inverted

ON: deactivated during normal operation. Activated when triggered.

OFF: activated during normal operation. Deactivated when triggered.

184 - Open After Alarm

01 - True Output/Inverted

ON: deactivated during normal operation. Activated when triggered.

OFF: activated during normal operation. Deactivated when triggered.

200 - Zone Follower - Single Zone

01 - True Output/Inverted

ON: deactivated during normal operation, activated when triggered.

OFF: activated during normal operation, deactivated when triggered.

02 - Timed Output

ON: output remains active until the PGM output timer expires.

OFF: output remains active until the zone is restored.

04 - Latching

ON: output remains latched until a valid access code is entered or a valid Prox tag is presented.

OFF: output follows the setting of the Timed Output attribute.

05 - Follow Alarm

ON: output is activated on zone alarm and stays active until the bell is turned off. See table for operation with bits 2 and 4.

OFF: output is activated on zone opening and deactivated when zone is closed.

Timed Output	Latching	Follow Alarm	PGM Output
OFF	OFF	OFF	ON upon zone opening (including tamper and fault), OFF upon zone closing
OFF	OFF	ON	ON upon zone alarm, OFF upon bell cut-off or alarm silenced
OFF	ON	OFF	ON upon zone opening, OFF upon valid code
OFF	ON	ON	ON upon zone alarm, OFF upon valid code
ON	OFF	OFF	ON upon zone opening, OFF upon PGM timer expires
ON	OFF	ON	ON upon zone alarm, OFF upon PGM timer expires
ON	ON	OFF	ON upon zone opening, OFF upon valid code
ON	ON	ON	ON upon zone alarm, OFF upon valid code

201 - 216 Zone Follower Zones 1-128

01 - True Output/Inverted

ON: deactivated during normal operation. Activated when triggered.

OFF: activated during normal operation. Deactivated when triggered.

02 - Timed Output

ON: output remains active until the PGM output timer expires.

OFF: output remains active until an access code has been entered.

09-16 – Zone Terminals 1-8

ON: zones associated with terminals 1-8 are enabled for zone follower operation.

OFF: zones are not enabled for zone follower operation.

[011] PGM Configuration Options

This section is used to configure PGM types that offer multiple options.

[001]-[164] Select PGM

The following options may be selected for each PGM:

Zone Follow PGM By Zone

This option is used to specify the zone that PGM type 200 follows. Enter 001-128 to select zone 1-128.

Proximity Tag Used

This option is used to define which proximity tag will activate PGM outputs programmed as [165] Prox Used. Enter 000 to enable this PGM attribute for all user proximity tags, or enter user number 0002-1000 to have this attribute activated by a specific user proximity tag.

Command Output 1-4

This option is used to assign a schedule, programmed in section [601]-[604], for the command output PGMs to follow. Program 001-004 to for schedules 1-4. Program 000 to activate the PGM when a proximity tag is presented.

[012] System Lockout

Keypad Lockout – Number of Invalid Local Attempts

This option controls the number of invalid access code entries allowed before the keypad is locked.

When keypad lockout occurs, the system is inaccessible by keypad for the programmed duration. If the number of invalid attempts is not reached within one hour, or if a valid access code is entered, the counter is reset to 0. Valid entries are 000 to 255 minutes. Entering 000 disables the feature. Presenting an invalid tag counts toward keypad lockout.

ⓘ **Note:** For EN 50131 certified installations, maximum number of attempts is 10.

Keypad Lockout Duration

This programming option determines the length of time the keypad is locked out for. If the system cold starts while in keypad lockout, the lockout is removed. Valid entries are 000 to 255 minutes. Entering 000 disables keypad lockout.

ⓘ **Note:** For EN 50131 certified installations, minimum of duration is 2 minutes.

Remote Lockout DLS

This programming option determines the number of invalid access code entries allowed via SMS or DLS before remote access is locked out for the programmed duration (see below). If the number of invalid attempts is not reached within one hour, or if a valid access code is entered through SMS or DLS, the counter is reset to 0. The valid entries are 003 to 255 attempts. Default is 6 attempts. The number of invalid attempts is fixed at 5 when using System Administrator Software and the lockout duration is 1 hour.

ⓘ **Note:** EN DLS tries to connect using the programmed DLS Access code first and, if unsuccessful, using the default DLS access code. Two failed attempts are counted if both codes are incorrect.

Remote Lockout Duration

This programming option determines how long the remote lockout lasts. If the system cold starts while in remote lockout, the lockout restarts for the programmed duration. Valid entries are 001 to 255 minutes. Entering 000 disables remote lockout.

System Options

[013] System Option 1

1 - NC Loop/EOL

ON: All zones are wired as normally closed circuits with returns connected to a COM terminal. The end-of-line resistor is not required. An alarm is generated when the circuit is opened.

OFF: All zones must be wired with an end-of-line resistor configuration, determined by option 2 below.

ⓘ **Note:** The valid EOL value is 5600 Ohms (5.6KΩ).

2 - DEOL/SEOL

ON: All zones use Double-End-of-Line resistors, except Standard Fire, Delayed Fire, Auto-Verified Fire, Co and Supervisory zone types. DEOL resistors enable detection of zone faults and tampers. The tamper resistor (5.6KΩ) is placed in parallel across the alarm activating device, and the single EOL resistor (5.6KΩ) is placed between the alarm and tamper contacts.

This allows detection of zone faults (shorted zone), tampers (open zone), alarms (11.2KΩ), and restored zones (5.6KΩ).

If the zone is disarmed and placed in the tamper or fault state, trouble beeps sound on all system keypads until a key is pressed on each partition. A zone tamper is sent to the monitoring station if programmed. If the zone is armed and a tamper is activated, the tamper alarm and zone alarm are logged and transmitted.

OFF: All zones must have a 5.6KΩ resistor. If the zone is shorted or open, it is in the tripped state. If the zone is open and programmed as a fire zone, it is in the trouble state. The EOL and DEOL zone attributes override this system option.

ⓘ **Note:** Zone Faults (Supervisories) on wireless zones do not cause an audible alarm while armed.

3 - Show All Troubles When Armed

ON: The Trouble LED illuminates when troubles are present on the system in both the armed and disarmed state.

OFF: The Trouble LED illuminates for all troubles while disarmed, but only for Fire Troubles while armed.

4 - Tamper/Faults Do Not Show As Open

ON: The zone LED does not illuminate if the zone is in the tamper or fault states. Only the Trouble LED illuminates.

OFF: The respective zone LED illuminates if the zone is in the tamper or fault states. The Trouble LED also illuminates.

5 - Auto-Arm Schedule in [*][6]

ON: The auto-arm schedules ([151] - [158]) are accessible to installers via [*][6] as well as Installer Programming.

OFF: The auto-arm schedules ([151] - [158]) are only accessible to installers via Installer Programming.

ⓘ **Note:** This toggle controls access for all eight partitions.

6 - Audible Exit Fault

ON: If a delay type zone is violated after the exit delay has expired, an entry delay warning is sounded through the keypad and siren indicating that an improper exit was made. If the alarm system is disarmed within the entry delay period no signal is sent.

OFF: The entry delay warning is sounded only through the keypad.

7 - Event Buffer Follows Swinger

ON: Once an event reaches its swinger shutdown limit programmed in [377] Communication Variables, it will no longer log events to the event buffer until the swinger shutdown is reset. This avoids filling the event buffer with false events.

OFF: The event buffer continues to log events to the buffer even after the event has gone into swinger shutdown.

8 - Temporal Three Fire Signaling

ON: All fire bells sound in the temporal three pattern. Cadence is as follows: (500ms ON, 500ms OFF, 500ms ON, 500ms OFF, 500ms ON, 1.5 sec. OFF).

OFF: All fire bells will sound with the standard 1 second on/1 second off fire bell cadence.

ⓘ **Note:** Must be on for UL/ULC installations.

[014] System Option 2

Bell Squawk

ON: The siren emits a single squawk when armed in any manner, including Auto-arm, and a double squawk when disarmed.

When the system is disarmed, the siren emits a series of three squawk pairs to indicate alarms in memory.

OFF: The siren does not squawk when arming or disarming.

ⓘ **Note:** NA For UL/ULC, must be enabled if wireless keys are used with the alarm system.

2 - Bell Squawk on Auto-Arm

ON: The siren squawks once every 10 seconds during the auto-arm pre-alert time.

OFF: The siren does not squawk during auto-arm pre-alert.

3 - Bell Squawk On Exit

ON: The siren squawks once per second during exit delay, changing to 3 squawks per second for the final 10 seconds.

OFF: The siren does not squawk for exit delay conditions.

4 - Bell Squawk On Entry

ON: The siren pulses with the same timing as the keypad buzzer during entry delay, changing to 3 squawks per second for the final 10 seconds.

OFF: The siren does not activate during entry delay.

4 - Bell Squawk On Trouble

ON: When a trouble condition exists on the system, the siren squawks 2 times every 10 seconds (as per the keypad buzzer).

The siren is silenced when the keypad beeps are silenced (any key pressed on keypad).

OFF: The siren does not activate with a trouble condition.

6 - Not Used

7 - Exit Delay Termination

ON: The exit delay is reduced to 5 seconds once a Delay 1 zone is restored. Force-Arm Delay 1 type zones also end the exit delay.

OFF: The exit delay timer continues to count even after the delay zone is restored.

All audible options associated with the exit delay function are silenced until the time programmed for the exit delay has elapsed.

8 - Fire Bell Continues

ON: For all Fire type alarms, the siren sounds until an access code is entered to silence the alarm or disarm the system regardless of the time programmed for bell timeout.

OFF: For all Fire type alarms, the siren sounds for the length of Bell Timeout or until an access code is entered.

ⓘ **Note:** Must be disabled for ULC installations.

[015] System Option 3

1 - [F] Key Enabled

ON: Pressing and holding the [F] key for 2 seconds triggers a Fire alarm.

OFF: The [F] key does not sound or report an alarm when pressed.

ⓘ **Note:** Use only for residential fire installations.

2 - [P] Key Enabled

ON: When a valid [P] key alarm is generated, the keypad buzzer emits a series of 3 beeps to acknowledge the alarm and the siren sounds for the length of bell timeout.

OFF: When a valid [P] key alarm is generated, the keypad buzzer and the siren are silent, but the alarm is still transmitted (if programmed).

ⓘ **Note:** Fire, Medical, and Panic key transmissions follow the partition 1 alarm/restore call direction options (Fire, Medical, and Panic key). The Fire, Medical, Panic keys operate even if keypad blanking and keypad lockout are active.

3 - Quick Exit

ON: When the system is armed, users may enter the [*][0] command to temporarily bypass a single Delay 1 or Delay 2 zone to exit the premises. Only one delay zone may be activated. Activity on another delay zone initiates the appropriate alarm sequence. If the delay zone is still open two minutes after the [*][0] command is entered, entry delay is initiated. If armed in the Stay mode, the automatic bypass on Stay/Away zones remains.

OFF: When the system is armed, users can not perform a quick exit using [*][0].

4 - Quick Arming /Function Key

ON: [*][0] arming and Stay/Away function keys may be used to arm the system without the entry of a valid access code.

OFF: [*][0] arming is not permitted. All arming functions require the entry of an access code to activate (including Stay/Away keys).

5 - Not Used

6 - Master Code Not User Changeable

ON: The master code (access code 01) may not be changed by the user and may only be programmed in Installer Programming.

OFF: The master code may be programmed by the user using the [*][5][Master Code] command. The master code may also be programmed in Installer Programming.

7 - Telephone Line Monitor Enable

ON: The TLM function is active and the system indicates a trouble condition when using the [*][2] View Trouble Conditions command.

OFF: The TLM function is deactivated and telephone line troubles are not indicated by the system.

ⓘ **Note:** NA Must be ON for UL/ULC listed installations.

8 - Telephone Line Monitor Audible When Armed

ON: When the system is disarmed, a telephone line monitor trouble generates a trouble indication as described above. If the system is armed, a telephone line monitor trouble generates an audible alarm on the siren for the duration programmed for bell timeout or until an access code is entered to disarm.

OFF: Telephone line troubles generate a trouble indication, the Trouble LED illuminates, and the keypad buzzer beeps until a key is pressed.

[016] System Option 4

1 - AC Trouble Display

ON: If AC power fails, the condition is reported to the monitoring station and is indicated as a trouble condition on the system keypads.

OFF: If AC power fails, the condition is reported, but the Trouble light on the system keypads is off. The trouble is displayed in [*][2].

ⓘ **Note:** NA Must be ON for UL/ULC listed installations.

2 - AC Trouble Light Flashes

ON: When AC power is lost, the Trouble light flashes in the base “Ready” and “Armed” mode within 30 seconds of power loss. When AC restores, the Trouble light stops flashing within 30 seconds. If enabled, this option overrides the AC display option.

OFF: When AC power is lost, the Trouble light illuminates but does not flash.

5 - Keypad Blanking

ON: If no keys are pressed for 30 seconds, all keypad lights except backlighting (if enabled) are shut off until the next keypress, entry delay, audible alarm or keypad buzzer condition.

Keypad function keys still operate when the keypad is blank, unless the function key is programmed to require an access code. Keypad Blanking While Armed overrides this feature. When a partition is armed and in alarm, entering a code to remove blanking silences the alarm and disarms the system.

OFF: The keypad lights remain ON at all times.

4 - Keypad Blanking Requires Code

ON: A valid access code must be entered before a blanked keypad can be used. Information becomes inaccessible to level 1 users.

OFF: Pressing any key on a blanked keypad removes keypad blanking.

ⓘ **Note:** CP-01 Keypad Blanking Requires Code must be set to off for CP-01 listed installations.

5 - Keypad Backlighting

ON: All keypads on the system have backlighting on at all times.

OFF: All keypads on the system have backlighting off.

6 - Power Save Mode

ON: If AC power fails, all keypad lights including backlighting are shut OFF. The keypad lights come back ON after a keypress, entry delay, audible alarm or keypad buzzer condition (except door chime). Keypad lights return to the off state after 30 seconds of inactivity.

OFF: If AC power fails, keypads do not go into power save mode.

7 - Bypass Display When Armed

ON: The Bypass status light is on if zones are bypassed when the system is armed.

OFF: The Bypass light is on only while the system is disarmed to indicate that zones on the system are bypassed. When the system is armed, the Bypass light is off.

The Bypass status light is on if Stay/Away zones are auto bypassed at the time of arming regardless of whether or not this option is enabled. This option only enables and disables manual bypass display.

8 - Keypad Tampers Enabled

ON: All keypads containing tamper switches generate tamper alarms and restores.

OFF: The tamper switches on all keypads do not generate tamper alarms.

ⓘ **Note:** If this option is used, all keypads should be properly installed and secured (tamper restored) before enabling the option.

ⓘ **Note:** NA Must be ON for UL/ULC commercial burglary listed installations.

[017] System Option 5

1 - Chime on Opening

ON: When a zone with the door chime attribute ON is opened, the system keypads and sirens beeps.

OFF: When a zone with the door chime attribute ON is opened, the system keypads and sirens do not beep.

2 - Chime on Closing

ON: When a zone with the door chime attribute ON is closed, the system keypads and sirens (if enabled) beep.

OFF: When a zone with the door chime attribute ON is closed, the system keypads and sirens (if enabled) do not beep.

3 - RF Jam Trouble Beeps

ON: Trouble beeps sound when an RF Jam Trouble is detected

OFF: Trouble beeps do not sound when an RF Jam Trouble is detected

4 - Multi Hit

ON: Alarms from the same zone within the Burglary Verification Timer duration cause the police code or burglary verified to be logged and transmitted. The number of zone trips required to create a confirmed alarm depends on the value of the programmable burglary verification counter.

OFF: Alarms from the same zone within the Burglary Verification Timer duration do not cause the police code or burglary verified to be logged and transmitted.

ⓘ **Note:** This feature only applies to zones defined as Interior, Interior Delay, Interior Stay/Away, Instant Stay/Away, Delay Stay/Away, or Night Zones (PIR Zones). Do not enable this option if section [380], option 2 - Restore on Bell Time Out is enabled.

5 - Late to Close

ON: Provides an audible warning if the alarm system has not been armed by a programmed time of day but does not arm the alarm system. The alarm system communicates and logs a Late to Close event at the end of the Auto-arm/Postpone pre-alert for each partition.

OFF: The alarm system will neither communicate nor log a Late to Close event at the time programmed for Auto-arm for each partition.

ⓘ **Note:** If the Auto-arm toggle option is disabled, the Auto-arm Pre-alert still occurs when a time is programmed for that day (if enabled) and the event is logged and communicated. This option does not directly affect the functionality of Auto-arm. If Late to Close is enabled and Auto-arming is not, LCD keypads display “System Arming in Progress” during the Late to Close Pre-alert.

6 - Daylight Savings Time

ON: The alarm system adjusts between Daylight and Standard times according to the times programmed in System Timers ([005] options 001-002).

ⓘ **Note:** Auto-arm and Test Transmissions should not be attempted between 0200 and 0300 hours, as they will be missed during a daylight savings clock adjust. Events programmed to occur between 0100 and 0200 will occur twice during a daylight savings clock adjust. Daylight Savings Time programming should not conflict with the Auto-arm and Test Transmissions programming.

OFF: The alarm system makes no automatic time adjustments for Daylight Saving time.

7 - Silence Chime During Quick Exit Delay

ON: Door chime does not sound during quick exit.

OFF: Door chime sounds during quick exit, according to zone settings.

8 - Bell Squawk on Away Arm/ Disarm Only

ON: Bell Squawks are only heard when away arming, as well as when disarming from Away mode. This feature prevents the siren from activating when arming in stay and night modes.

OFF: Bell Squawks are heard during all types of arming and disarming.

ⓘ **Note:** This option follows the “Bell Squawk Attribute” features if they are enabled.

[018] System Option 6

1 - Test Transmission Exception

ON: The alarm system does not send a test transmission if a transmission was sent to the receiver within the programmed interval as set in section [377]>[003] – Periodic Test Transmission Cycle.

OFF: Test transmissions are always sent at the programmed interval.

2 - Real-Time Bypass Reporting

ON: When a non-24-hour zone is bypassed in [*][1], the system immediately logs and communicates the bypass status of the zone.

Global Zones: 24-hour and non-24 hour zone bypasses are logged and communicated in real time. Non-24 hour zone unbypass events are generated when the last assigned partition is disarmed.

OFF: When a non 24-hour zone is bypassed in [*][1], the system logs and communicates the bypass status of the zone only after the partition is armed. This option is applied regardless of how zones are bypassed in [*][1], recall bypass group, clear all bypasses, bypass open zones, bypass recall as well as other methods such as bypassing via ITv2 or DLS.

Global Zones: 24-hour zone bypasses are logged and communicated in real time. Non 24-hour zone bypass events are logged and communicated when armed. Non 24-hour zone unbypass events are logged and communicated when the last partition is disarmed.

3 - Armed Status PGM ON at End of Exit Delay

ON: PGMs are activated at the end of exit delay. This applies to PGMs with one of the following armed status attributes:

- System Armed Status PGM

- Away Armed Status PGM
- Stay Armed Status PGM
- Away Armed with No Zone Bypass Status
- Partition Status Alarm Memory

OFF: PGMs are activated at the beginning of exit delay. This applies to PGMs with one of the armed status attributes listed above.

4 - Not Used

5 - Keypad Buzzer Follows Bell

ON: The keypad buzzer activates with all bell activity for the selected partition.

OFF: The keypad buzzer only activates with alarms programmed to do so.

6 - Not Used

7 - Exit Delay Restart

ON: Opening a delay zone door after it has already been opened and closed during an exit delay restarts the exit delay timer. Further openings and closings do not restart the timer.

OFF: Delay zone openings and closings do not restart the exit delay.

8 - AC Fail Trouble Beeps

ON: System keypads beep when an AC trouble event occurs.

OFF: System keypads are silent during AC troubles.

[019] System Option 7

1 - Audible Wireless Device Fault

ON: If a wireless zone fault occurs while armed, the siren sounds for the duration of Bell Time Out. This option only affects zone definitions that are considered armed. The following zone types do not generate an alarm when faulted while stay armed: interior stay away zone, delay stay away zone, instant stay away zone, night zone. The following zone types do not generate an audible alarm in any armed state (stay, away, or night): 24-hour supervisory, 24-hour non-alarm, 24-hour CO, delayed 24-hour Fire, standard 24-hour fire, Auto-verified fire.

When the partition is armed, wireless supervisory troubles from sirens, keypads and repeaters generate audible alarm conditions.

If Tamper/Fault Detection is enabled, these events can start the burglary verified timer and affect the burglary verified counter.

OFF: Wireless device faults do not sound the siren.

2 - Latching Troubles

ON: Troubles remain on the system until viewed via [*][2], even if they are restored. The trouble condition is cleared when the [#] key is pressed from the [*][2] menu after the trouble has restored. The Trouble LED turns off unless other troubles are present. The trouble is not cleared if the [*][2] menu times out before the [#] key is pressed.

OFF: Troubles are cleared once restored.

ⓘ **Note:** For UL installations, this option must be ON.

3 - Not Used

4 - R Button

ON: When the panel goes off hook to communicate, it performs a dial tone check. If no dialtone is detected, the panel will wait 20 seconds and perform another 5 second dial tone search. If dial tone is still not present, the panel force dials if programmed to do so. This entire sequence counts as one dialing attempt.

OFF: If no dial tone is present, the panel does not attempt to switch to a second phone line.

5 - Audible Bus Fault

ON: All module supervisory trouble conditions activate the siren.

OFF: Only zone expander supervisory trouble conditions while armed activate the siren.

6 - Duress Codes

ON: The duress code attribute can be enabled/disabled from the [*][5] menu. For UK BS8243 installations the default is off.

OFF: The duress code attribute is not programmable from the [*][5] menu.

7 - Temperature in Celsius

ON: Temperature is displayed in Celsius on LCD keypads.

OFF: Temperature is displayed in Fahrenheit on LCD keypads.

8 - Reset After Zone Activation

ON: Only a police code\sequential detection alarm requires a remote reset once the partition has been disarmed.

OFF: Any burglary alarm requires a remote reset once the partition has been disarmed.

[020] System Option 8

1 – Access Code Entry During Entry Delay

ON: During entry delay the alarm system can only be disarmed using a keyswitch or proximity tag. When the siren is active an access code can still be used to disarm the system.

OFF: An access code can be used to disarm the system during entry delay.

2 - EU Entry Procedure

ON: If an alarm occurs on a zone when entry delay is not active, the siren activates and the alarm is communicated immediately, depending on the zone type tripped.

When entry delay is active, all burglary type alarms activate the siren, but communication of the alarm is delayed by 30 seconds. When entry delay expires, the alarm is not communicated unless the siren has been active for at least 30 seconds.

Police code is not generated as a result of alarms triggered during entry delay, although the Burglary Verification Timer starts after entry delay and the 30-second communication delay expire.

This feature is only active when the partition is armed.

OFF: Burglary alarms that occur during entry delay activate the siren and are communicated immediately. Two exceptions are if the bell delay timer is programmed and if transmission delay is enabled for the zone in alarm. In both cases, the alarm follows the timer.

3 - [*][8] Access While Armed

ON: This option ensures [*][8] installer programming is accessible from a keypad on a disarmed partition while other partitions on the system are still armed.

Note: UL For UL listed installations, this option must be disabled.

OFF: [*][8] installer programming is not available when any partition on the system is armed. All partitions must be disarmed and the siren must be off before [*][8] is accessible.

4 - Remote Reset

ON: If an alarm occurs on a burglary zone, the system is locked out after disarming. It remains locked until a 5-digit reset code, provided by the installer/central station, is keyed in. If a duress code is used to disarm the partition, the system is not locked out.

In the disarmed state, only Audible 24 Hour Burglary zones, Audible 24 Hour Latching Tamper zones, and Audible 24 Hour zone on PGM 2 cause lockout.

To obtain the reset code, the user must provide a corresponding system lock code, displayed on the keypad when one of the following conditions occurs:

- the system has been disarmed (Duress Code excluded)
- the bell has timed out (24Hr zones)
- an access code has been entered (24Hr zones)

On an LCD keypad, the message “REMOTE RESET RQD” is displayed on the top line and “CODE” along with the actual code is displayed across the bottom line.

On an LED keypad, the reset number is scrolled across the screen.

While the system is locked out, the only options available are [*][3], [*][6], [*][7], and [*][8]. Accessing [*][8] Installer Programming unlocks the alarm system. The system continues to function (alarms, tampers, etc) while the system is locked out. Lock out follows both transmission and bell delays.

OFF: The system is not locked out after an alarm occurs.

Note: NA Not for use with UL/ULC listed installations.

5 - Engineer’s Reset (EU)

ON: If the alarm system has gone into alarm during the previous armed period, or if a 24-hour alarm has occurred (armed or disarmed), the system cannot be armed (Ready light OFF) until Installer Programming is entered or Engineer’s Reset is performed via DLS. “Reset Required” is displayed on the keypad. This feature applies to tampers and faults in both armed and disarmed states and does not apply to module tampers, system supervisories, zone expander alarms or PGM 2 input alarms.

Note: If Engineer’s Reset is triggered during exit delay, the system still arms. Troubles cannot be overridden while Engineer’s Reset is enabled.

OFF: The system does not require Engineer’s Reset or to be placed into Installer Programming in order to arm the alarm system after an alarm.

6 - Keyswitch Disarming During Entry Delay

ON: Keyswitches, proximity tags and wireless keys disarm the alarm system only if an entry delay is active.

OFF: Keyswitches, proximity tags and wireless keys disarm the alarm system regardless of entry delay.

7 - Installer Access and DLS

ON: The user must enter [*][6][access code][05] before the installer can access Installer Programming by DLS or via the keypad ([*][8]).

Installer Programming remains accessible for 6 hours, during which time the installer can enter/exit or connect with DLS an unlimited number of times.

OFF: The installer can access Installer Programming without the user entering [*][6].

8 - Troubles Inhibit Arming

ON: The following troubles prevent arming until restored:

- Tampers on the alarm system, modules and zones
- Corbus troubles
- AC troubles on the alarm system and modules
- Battery troubles on the alarm system, modules and zones
- Transmission troubles (FTC, TLM, GPRS, Ethernet)
- Bell troubles

The alarm system can still be armed if troubles are overridden. To perform a trouble override, while in the Trouble Menu ([*][2]), scroll right or left and press [*] when Trouble Acknowledgment is displayed on the keypad. Alternatively, press the [9] key to acknowledge and override the existing troubles.

To override open zones, faulted zones or tampered zones use the Zone Bypass feature.

OFF: The system can be armed even when troubles are present.

ⓘ **Note:** When Engineer's Reset is on, trouble conditions cannot be overridden. Zone Expander supervisory troubles cannot be acknowledged and overridden. These conditions must be restored before the panel can be armed.

ⓘ **Note:** When [024][3] is enabled, AC/DC Inhibit Arming, the AC or DC trouble must be restored before the system can be armed.

[021] System Option 9

1 - Trouble Display

ON: If the panel is both armed and keypad blanking is active, when a trouble is present the keypad trouble LED will remain off . When the system is disarmed, or if blanking is removed, the trouble LED will be active if a trouble is present.

OFF: The trouble LED will turn off when keypad blanking is active only while armed.

Keypad Blanking while Armed

ON: If [016][3] is disabled, 30 seconds after the exit delay terminates, the keypad blanks (no indicator lights).

OFF:The keypad blanks when the system is armed or disarmed.

ⓘ **Note:** EN For systems compliant with EN50131-1 and EN50131-3, option [021] bit 2 "Keypad blanking while armed" must be ON.

3 – Auto-Arming Bypass

ON: All zones open at the end of the auto-arming exit delay are automatically force armed.

OFF: Only zones with the Force Arm attribute enabled are automatically force armed.

ⓘ **Note:** Force arming not used for UL/ULC listed installations (requires manual bypass).

4 - Ready Display

ON: The keypad ready LED will continue to show system ready status while keypad blanking is active.

OFF: The keypad ready LED will turn off when keypad blanking is active.

55 - PGM Blanking

This feature is meant to be used in conjunction with the keypad blanking while armed feature.

ON:This feature is necessary to comply with EN50131-1:2006.

When the system enters blanking mode, any PGMs programmed as Armed Status, Ready Status, Away Armed Status, or Stay Armed Status will de-activate. If blanking is cleared by pressing a key, or entering an access code depending on how the panel is configured, these PGMs must re-activate if they would have normally been ON if blanking was disabled.

OFF: When the system enters blanking mode, any PGMs programmed as Armed Status, Ready Status, Away Armed Status, Stay Armed Status) operate normally.

6 - Armed Display

ON: The keypad armed LED will continue to show Armed status while keypad blanking is active.

OFF: The keypad armed LED will turn off when keypad blanking is active.

7 - Open Zones Cancels Arming

ON: The system cannot be armed while zones are open unless the zones are bypassed using [*][1]. In order to bypass open zones, the bypass attribute needs to be enabled for the zone.

OFF: Open zones do not prevent arming.

8 - Audible Exit Delay for Stay Arming

ON: When the system is armed in Stay mode the exit delay is sounded by 1 beep every 3 seconds.

OFF: When the system is armed in Stay mode the exit delay is silent.

[022] System Option 10

1 - [F] Key Option

ON: When the [F] key is pressed, acknowledge beeps are only emitted from the keypad. The siren does not sound.

OFF: [F] key acknowledgment beeps are emitted from the keypad and the siren.

2 - Not Used

3 - Not Used

4 - Transmission Counter in Hours

ON: The alarm system sends a test transmission after the programmed number of hours in the test transmission cycle (Section [377], Option 003).

OFF: The alarm system sends a test transmission after the programmed number of days.

5 - Away to Stay Toggle

ON: The alarm system cannot be switched from Away to Stay mode by pressing the [Stay] function key.

OFF: The alarm system can be switched from Away to Stay mode by pressing the [Stay] function key.

6 - 2-Way Audio Disconnect

ON: The system does not disconnect the 2-way audio session if a new event needs to be communicated.

ⓘ **Note:** This option applies to new alarm events only. All non-alarm events (except Fire Troubles) are communicated after the 2-Way session has ended.

OFF: The system disconnects the 2-way audio session if a new event occurs.

7 - Trouble Beeps are Silent

ON: When a trouble is detected on the system, trouble beeps are not sounded at the keypad with the exception of Fire troubles.

OFF: When a trouble is detected on the system, trouble beeps are sounded at the keypad.

ⓘ **Note:** This option must be OFF for UL Residential Fire applications.

8 - Keyswitch Arms in Away Mode

ON: Keyswitch arming arms the alarm system in away mode.

OFF: Keyswitches only arm the system in away mode if an entry/exit zone is violated during exit delay.

ⓘ **Note:** Proximity tag arming follows this section.

[023] System Option 11

1 - Ready LED Flashes for Force Arm

ON: If a force arm capable zone is tripped, partition keypads flash the ready LED in the disarmed state instead of illuminating it steadily. If a non-force arm capable zone is tripped, the ready LED turns off.

OFF: If a force arm capable zone is tripped, the Ready LED is illuminated steadily. If a non-force arm capable zone is tripped, the Ready LED turns off.

2 - Not Used

3 - Tamper/Fault Detection

ON: The following trouble conditions, when configured to generate audible alarm conditions, will contribute to a burglary verification sequence when sequential detection is used. When enabled, a bell circuit trouble will also generate an audible alarm condition using other sirens that assigned to the partition.

- TLM trouble
- Bell circuit trouble
- Zone fault
- Module supervisory trouble
- Alternate Communicator fault
- Ethernet Trouble

OFF: Trouble conditions are displayed and processed as standard operation.

ⓘ **Note:** This option applies to the Sequential Detection feature only.

4 - Access Code Required for [*][1]

ON: When using the [*][1] Bypass Zones command, an access code must be input before zones are bypassed.

OFF: An access code is not required to bypass zones using [*][1].

5 - Access Code Required for [*][2]

ON: When using the [*][2] View Troubles command, an access code must be input before system troubles can be viewed.

OFF: An access code is not required to view troubles using [*][2].

ⓘ **Note:** With this feature enabled, trouble beeps will only be silenced when you enter and exit the [*][2] menu.

6 - Access Code Required for [*][3]

ON: When using the [*][3] View Alarms in Memory command, an access code must be input before the alarm memory can be viewed.

OFF: An access code is not required to view alarms in memory using [*][3].

7 - Access Code Required for [*][4]

ON: When using the [*][4] Chimes command, an access code must be input before chimes can be toggled on and off.

OFF: An access code is not required to toggle chimes using [*][4].

8 - [*][6] Accessibility

ON: All user codes provide access to the [*][6] menu.

OFF: Only the master code provides access to the [*][6] menu.

[024] System Option 12

50Hz AC/60Hz AC

ON: Incoming AC power cycles at 50Hz.

OFF: Incoming AC power cycles at 60Hz.

ⓘ **Note:** NA For UL/ULC listed systems, use only 60Hz setting.

2 - Crystal Timebase

ON: In situations where AC power input is unstable, the alarm controller's internal crystal is used as the time base.

OFF: The 50 or 60 Hz AC power input is used as the time base.

3 - AC/DC Inhibits Arming

ON: The system cannot be armed when an AC or DC trouble is present. This includes keypad, keyswitch, automatic, and DLS arming. An error tone is generated if the user attempts to arm the system during an AC/DC trouble.

ⓘ **Note:** Displaying AC troubles ([016] option 2) is strongly recommended if this option is enabled.

OFF: The system can be armed, regardless of the presence of an AC or DC trouble and does not check the system battery upon arming.

4 - Tampers Inhibit Arming

ON: Tampers must be restored through Installer Programming before the system can be armed (including no-activity and keyswitch arming).

When this option is enabled, manual zone bypassing does not bypass the tamper or fault states (DEOL). This feature also applies to zone faults.

OFF: Tamper troubles do not latch and do not prevent arming.

5 - Real-Time Clock

ON: The alarm system sends a real-time clock request to the alternate communicator at 4:05 PM or when system time is lost. The system uses the acquired time as system time.

OFF: The alarm system does not send a real-time clock request to the alternate communicator. Local time setting is used as the system time.

6 - Not Used

7 - Brownout Detection

ON: If AC drops below the acceptable level, the alarm system generates an AC trouble.

OFF: AC Brownout detection is disabled.

ⓘ **Note:** This option must be enabled for UL/ULC Commercial Fire installations.

8 - DLS Disconnect

ON: All events except Periodic Test Transmission, Periodic Test with Trouble, and System Test are considered priority events. If DLS is active when an event occurs, the alarm system immediately terminates the connection in order to communicate the new events.

OFF: Only the following alarm type events terminate a DLS session:

- Zone alarms
- FMP key alarms
- Duress alarms
- Zone expander supervisory alarms
- 2-wire smoke alarms

[025] System Option 13

1 - European Dial

ON: Pulse dialing make/break ratio is 33/67.

OFF: Pulse dialing make/break ratio is 40/60.

2 - Force Dial

ON: The system dials the central station phone number even if no dial tone is present. The process is as follows:

1. Dial programmed phone number.
2. If no dial tone detected, terminate call.
3. Search for dial tone for 5 seconds.
4. If no dial tone detected, hang up for 20 seconds.
5. Search for dial tone for 5 seconds.
6. If no dial tone detected, dial anyway.

Result

OFF: No attempt is made to contact the central station if dial tone is not present.

ⓘ **Note:** UL Force Dial must be enabled for UL installations.

3 - Test Transmission Counter in Minutes

ON – When the option is on, the Periodic Test Transmission interval programmed in section [377] [003] will be 000-255 minutes instead of 000-255 days or hours.

OFF – When the option is off, the Periodic Test Transmission interval programmed in section [377] [003] will be 000-255 days, or hours if option 4 in section [022] is enabled.

4 - Not Used

5 - I.D. Tone

ON: After the telephone number is dialed, the alarm system emits a tone (as specified by I.D. Tone Frequency option) for 500ms every two seconds to indicate that a digital equipment call is in progress.

OFF: I.D. tone is disabled.

6 - Tone Generated-2100Hz

ON: 2100 Hz I.D. tone.

OFF: 1300 Hz I.D. tone.

7 - 1 Hour DLS Window

ON: When DLS access is enabled ([*][6] option 5 ON), Installer Programming is accessible through DLS or the [*][8] menu only once during a 1-hour window.

OFF: When DLS access is enabled, Installer Programming is accessible through DLS or the [*][8] menu an unlimited number of times during a 6-hour window.

8 - FTC Audible Bell

ON: If a Failure to Communicate trouble is generated while the system is armed, the siren activates for the length of bell time-out or until the system is disarmed.

OFF: If a Failure to Communicate trouble is generated while the alarm system is armed, the siren does not activate but the keypad buzzer emits trouble beeps until a key is pressed.

[040] User Authentication

This feature enables the installer or master user to select one of two user authentication methods:

01 - User Code or Proximity Tag

The user can access the system by entering a valid code or by presenting a proximity tag.

02 - User Code and Proximity Tag

The user must enter a valid code and present a proximity tag whenever the system prompts for an access code. A proximity tag is not required to enter [*][8] Installer Programming.

ⓘ **Note:** When this option is enabled, the proximity tag and code must belong to the same user.

[041] Access Code Digits

00 - 4-Digit Access Codes

Access codes are 4 digits long.

01 - 6-Digit Access Codes

Access codes are 6 digits long.

ⓘ **Note:** EN This setting is required for EN50131-1 compliant installations using less than 100 access codes.

02 8-Digit Access Codes

Access codes are 8 digits long.

ⓘ **Note:** EN This setting is required for EN50131-1 compliant installations using 1000 access codes.

[042] Verified Events

Burglary Verified Counter

This option programs the number of zone activations required to verify an alarm. Valid entries are 000 to 255.

Holdup Verification Counter

This counter determines the number of alarms that must occur within the Holdup verification window before a confirmed Holdup alarm is logged and communicated. Zones with the holdup verification zone attribute enabled contribute to the generation of a confirmed Holdup alarm in conjunction with this counter and the holdup verification timer.

Burglary Verification Selection

Use this section to select one of the following burglary verification timer modes:

	Mode	Description
001	Police Code	The burglary verification timer operates in minutes.
002	Cross Zoning	The burglary verification timer operates in seconds. The first alarm in the sequence does not log or communicate the alarm or activate the bell.
003	Sequential Detection	The burglary verification timer operates in minutes. The first alarm in the sequence causes an audible bell.

Partition Setup

[151]-[158] Partition Auto-Arm/Disarm

Enter section 151 to 158 for partition 1 to 8 auto-arm/disarm configuration.

[001] – Partition Auto-Arming Times

Use this section to program the time of day a partition is automatically armed. A different auto-arming time can be programmed for each day of the week from Sunday to Saturday. Time is in 24-hour format (HH:MM) and valid entries are from 00:00 to 23:59.

Conditions that cancel auto-arming if enabled:

- Open zones (depending on the settings of the zone)
- AC/DC troubles
- System troubles
- Any valid disarming procedure - proximity tag, access code, disarm key, etc.

[002] – Partition Auto-Disarm Times

Use this section to program the time of day a partition is disarmed. A different auto-disarming time can be programmed for each day of the week from Sunday to Saturday. Time is in 24-hour format (HH:MM) and valid entries are from 00:00 to 23:59.

ⓘ **Note:** If entry delay is active at auto-disarm time, the system does not disarm. A valid disarming procedure is required by the user who initiated the entry delay.

[003] – Partition Auto-Disarming Holiday Schedules

Use this section to select a holiday schedule group.

[711]-[714] Holiday Schedules for more information.

[004] – Partition Auto-Arming Pre-Alert Timer

Use this section to program the duration of the auto-arm pre-alert. The system arms when the pre-alert timer expires. Valid entries are from 001 - 255 minutes.

If a valid access code is keyed in, this timer is postponed for the length of time programmed in Partition Auto-Arm Postpone timer (see below). The pre-alert timer can be postponed multiple times. Keyswitches and proximity tags can be used to cancel auto-arming.

[005] – Partition Auto-Arm Postpone Timer

Use this section to program the length of time the auto-arm pre-alert timer is postponed for. Valid entries are between 001 and 255 minutes. 000 cancels the postpone timer.

When the postpone timer expires, the Auto-arm pre-alert timer restarts (unless the partition is armed). If left uninterrupted the partition arms at the end of the pre-alert.

If a code is entered during the pre-alert, auto-arm cancel/postpone is logged and communicated and the postpone timer starts. When the postpone timer expires, pre-alert is sounded again and the cycle repeats. The Auto-arm may be postponed multiple times.

[006] – Partition No Activity Arming Timer

Use this section to program the duration of the No Activity timer. If this timer expires and no zones have been activated, the partition arms in Away mode (exit delay will not sound). When the timer expires, keypad buzzers activate for the time programmed in No Activity Arming Pre-Alert (see below).

The timer restarts when a delay type zone is restored. The timer does not restart when the system is disarmed. The timer stops if an un-bypassed zone is tripped, tampered or restored or with any keypad activity.

Separate No Activity Arming timers are provided for each partition.

Valid entries are from 000 – 255 minutes. 000 disables this feature.

[007] – Partition No Activity Arming Pre-Alert Timer

Use this section to program the duration of the No Activity Arming pre-alert that sounds when the No-Activity timer for the partition expires. If any key is pressed or zone is activated or restored, the Auto-Arm pre-alert is aborted.

Valid entries are 000 - 255 minutes. 000 disables this feature.

ⓘ **Note:** Wireless key arm keys cannot be used to cancel no activity pre-alert.

[200] Partition Mask

A partition is a limited area of the premises which operates independently from the other areas. Partitions are added or removed from the system by applying or removing a partition mask.

[001] – Partition 1 to 8 Enable Mask

Select options 01-08 to enable or disable partitions.

Partition 1 is always enabled. Partitions 2 to 8 are selectable.

The number of available partitions depends on the model, as shown below:

Model	Zones	Partitions
HS2128/HS2128 E	128	8
HS2064/HS2064 E	64	8

HS2032	32	4
HS2016	16	2
HS2016-4	32	8

[201]-[208] Partition Zone Assignment

Zones can be assigned to any partition. Global zones are zones assigned to more than one partition. A global zone is only armed when all assigned partitions are armed. The zone is disarmed when any of the assigned partitions is disarmed. By default, zones 1 through 8 are assigned to partition 1.

To assign zones to partitions, first select a partition [201]-[208], then select a zone group [001]-[016] and then a zone (1-8):

Zone Group	Zones	Zone Group	Zones
001	1-8	009	65-72
002	9-16	010	73-80
003	17-24	011	81-88
004	25-32	012	89-96
005	33-40	013	97-104
006	41-48	014	105-112
007	49-56	015	113-120
008	57-64	016	121-128

All zones assigned to a partition are supervised and operate according to the zone type programmed. If a zone is not assigned to a partition, it is not supervised and all activity on the zone is ignored by the system.

[300] Panel/Receiver Communication Paths

This section is used to select the path of communications between the alarm system and the central station.

Paths can be established through either the alarm system's on-board Public Switched Telephone Network (PSTN) connection or through the alternate communicator (cellular or Ethernet) if equipped.

Paths to four receivers can be programmed using – Delay 1 - – Interior. The communications path for each receiver is defined by selecting one of the following six options:

[01] Phone Line

Events are communicated through the alarm system phone line programmed in section [301]. If Phone Line is selected for receiver 1, the phone number programmed in section [301] option [001] is used. If Phone Line is selected for receiver 2, the phone number programmed in section [301] option [002] is used, etc.

[02] Alternate Communicator Auto Routing

Selecting this option enables the alternate communicator to determine which communications path to use (Ethernet primary/secondary, and/or cellular primary/secondary). See the alternate communicator manual for details.

[03] Alternate Communicator Receiver 1

Events are communicated through IP receiver 1.

[04] Alternate Communicator Receiver 2

Events are communicated through IP receiver 2.

[05] Alternate Communicator Receiver 3

Events are communicated through cellular receiver 1.

[06] Alternate Communicator Receiver 4

Events are communicated through cellular receiver 2.

To use PSTN as the communications path, program section [300] options 001 through 004 as [01] PSTN 1.

To use the alternate communicator to establish a communications path, program two of the receivers (section [300] options 001, 002, 003 or 004) as [03] and [04] for Ethernet, and two of the receivers as [05] and [06] for cellular.

[301] Phone Number Programming

Section [301] is used to program up to 4 telephone numbers used to communicate with the central station over PSTN.

[001] The phone number used to communicate with receiver 1

[002] The phone number used to communicate with receiver 2

[003] The phone number used to communicate with receiver 3

[004] The phone number used to communicate with receiver 4

All telephone numbers can be a maximum of 32 digits. Hexadecimal digits may be included to perform the following functions:

- HEX B ([*] [2] [*]) - to dial "*"
- HEX C ([*] [3] [*]) - to dial "#"
- HEX D ([*] [4] [*]) - for an additional dial tone search, as required by PBX telephone systems.
- HEX E ([*] [5] [*]) - to insert a 2-second pause in the telephone number. This causes a static delay of 2 seconds before any additional dial tone search in a phone number.
- HEX F ([*] [6] [*]) - represents the end of the Phone Number (everything after F is ignored).
- Pressing [#] in these sections exits and saves the entire phone number.

The alarm system does not attempt to communicate using PSTN if no phone number is programmed.

[304] Call Waiting Cancel String

Use this section to program a string that, when pressed, disables call waiting on a phone line. Call waiting cancel is typically *70 in most areas. Dialing this string before a phone number disables call waiting for the duration of the call.

When this section is programmed and Call Waiting Cancel Options is ON ([382] Communicator Option 3), the alarm system dials this string before the phone number. This is only done on the first dialing attempt for each phone number.

This is a 6-digit field. Fill unused digits with Hex F.

Reporting

[307] Zone Reporting

Zone alarms, tampers and faults are transmitted to the central station using automatic contact ID or SIA formats. Reporting can be toggled on or off by zone using toggle options 1-6 in subsections 001-128.

Reporting Codes.

[308] Event Reporting

System events are transmitted to the central station using automatic contact ID or SIA formats. Reporting can be disabled by toggle options, programmable in the following sub-sections.

Reporting Codes for event code descriptions.

[001] Miscellaneous Alarm 1

The reporting codes in this section are sent to the Alarm & Restore call direction group.

1 - Duress Alarm

Sent when a duress code is used to perform any function on the system.

2 - Opening After Alarm

Sent during disarming if an alarm occurred during the previous armed period.

3 - Recent Closing Alarm

Sent if an alarm occurs within 2 minutes of the exit time expiration (for the first alarm only). Zone alarm transmission delays do not affect this reporting code.

4/5 – Zone Expander Supervisory Alarm/ Restore

Sent when the system loses communication with the following modules:

- Zone Expander Module
- Keypad with an on-board I/O configured as a zone

This reporting code is independent of the general system supervisory code sent to the Alarms and Restores call direction group.

6 - Burglary Verified

When using Cross Zoning, this reporting code is sent when two crossed zones go into alarm during the cross zone timer.

When using Police Code, this reporting code is sent when any two zones that have the burglary verification attribute enabled go into alarm. Arming the system resets the zone alarm count for police code.

7 - Burglary Not Verified

When using Cross Zoning, this reporting code is sent if the cross zone timer is initiated by the first cross zone alarm, but is not verified by a second alarm before the timer expires.

8 - Alarm Cancel

Sent when a valid access code is entered during the communications cancel window. The central station acknowledges cancellation by providing a keypad ringback.

[002] Miscellaneous Alarm 2

1 - Holdup Verified

Sent when the configured Holdup verified conditions have been met.

Note: NA Not for use with UL/ULC listed installations.

[011] Priority Alarms 1

The reporting codes in this section are sent to the Alarm & Restore call direction group and apply to all system keypads.

1/2 – Keypad Fire Alarm-[F] Key Alarm/Restore

Sent when [F] Key alarms/restores occur.

3/4 – Keypad Medical Alarm-[M] Key Alarm/Restore

Sent when [M] Key alarms/restores occur. The keypad beeps 10 times when the medical alarm is successfully communicated to the alarm monitoring station.

5/6 – Keypad Panic Alarm-[P] Key Alarm/Restore

Sent when [P] Key alarms/restores occur.

7/8 – Auxiliary Input Alarm/ Restore

Sent when an alarm condition occurs/ is restored on PGM 2 (if configured as an input).

[021] Fire Alarms 1

3/4 – PGM 2 2-Wire Alarm/Restore

When PGM 2 is programmed as a 2-wire smoke alarm, this reporting code is sent when an alarm condition is detected and when it is restored.

[101] Tamper Events

3/4 – Module Tamper/Restore

This reporting code is transmitted when a system module enters a tamper alarm state and uses the System Tamper Alarm and Tamper Restore call direction.

5 - Keypad Lockout

Sent when a number of invalid access codes have been entered at a system keypad.

This reporting code is sent to the system Tamper Alarm & Tamper Restore call direction group.

7 - Remote Lockout

Sent when a number of invalid access codes have been entered through DLS or Integration. This reporting code is sent to the system Tamper Alarm & Tamper Restore call direction group.

[201] Open/Close Events 1

1/2 – User Closing/Opening

This reporting code is transmitted when a user arms/disarms a partition and uses the Opening and Closing call direction.

5/6 – Special Closing/Opening

This reporting code is transmitted when a partition is closed/opened using quick arm ([*][0]), downloading, or Stay or Away function keys without an access code. The Opening and Closing call direction group is used for this reporting code.

7/8 – Keyswitch Opening/Closing

This reporting code is transmitted when a keyswitch zone is used to arm or disarm the system.

[202] Open/Close Events 2

1 - Automatic Closing

This reporting code is transmitted when a partition is automatically armed or schedule armed and uses the Opening call direction group.

2 - Automatic Disarm

This reporting code is transmitted when a partition is automatically disarmed when a scheduled time of day is reached.

3 - Auto Arm Cancellation/Postpone

This reporting code is transmitted when the automatic arm sequence is canceled during a pre-alert and uses the Opening and Closing call direction group.

[211] Miscellaneous Open/Close Events

1/2 – Late to Close/Open

This reporting code is transmitted when a partition is not disarmed before the automatic disarm time, when the late to open option, ([*][6], option 9) is enabled. The Opening and Closing call direction group is used for this reporting code.

5 - Exit Fault

This reporting code is transmitted when an exit error occurs and entry delay expires before the system is disarmed. The Alarms and Restores call direction group is used for this reporting code.

If the delay zone that caused the exit error has cross zoning enabled, the exit fault and zone alarm transmits if a second zone is not tripped. The local alarm sequence follows cross zoning rules. The exit error is transmitted with the zone alarm that caused the fault, even if that zone has transmission delay enabled.

[221] Bypass Events

1/2 – Automatic Zone Bypass/Unbypass

This reporting code is transmitted when a zone is automatically bypassed/unbypassed and uses the Opening and Closing call direction group.

ⓘ **Note:** UK Must be enabled in UK.

03 - Partial Closing

This reporting code is transmitted if zones are manually bypassed at the time of arming or force armed by automatic arming. The Opening and Closing call direction group is used for this reporting code.

Automatic bypasses caused by stay arming do not cause transmission of this code.

[301] Panel Events 1

1/2 – Panel AC Fail Trouble/Restore

This reporting code is transmitted when the alarm system AC supply fails or has been restored. A programmable delay applies to both the trouble and the restore. This reporting code is sent to the System Maintenance call direction group.

3/4 – Panel Low Battery Trouble/Restore

These reporting codes are transmitted when the panel battery voltage falls below 11.5VD or is restored. These reporting codes are sent to the System Maintenance call direction group.

5/6 – Panel Battery Absent Trouble/Restore

These reporting codes are transmitted when the panel battery is not connected or is restored. These reporting codes are sent to the System Maintenance call direction group and are transmitted when the panel battery is detected as absent.

[302] Panel Events 2

1/2 – Bell Circuit Trouble/Restore

This reporting code is transmitted when a bell trouble condition occurs or is restored on the system.This reporting code is sent to the System Maintenance call direction group.

3/4 – Telephone Line Trouble and Restore

This reporting code is transmitted when an alarm controller TLM trouble occurs or is restored. The TLM trouble is communicated over an unaffected communication path if available.

This reporting code is sent to the System Maintenance call direction group.

5/6 – Auxiliary Power Supply Trouble/Restore

This reporting code is transmitted when an auxiliary voltage supply trouble occurs or is restored. This reporting code is sent to the System Maintenance call direction group.

ⓘ **Note:** When the electronic fuse built in to the auxiliary power supply is tripped due to a short or high current draw, the alarm system must be powered down then back up to reset the fuse.

[305] Panel Events 5

3/4 – PGM 2 2-Wire Trouble/Restore

This reporting code is transmitted when a trouble condition on PGM 2, configured as two-wire smoke, occurs or is restored. This reporting code is sent to the System Maintenance call direction group.

[311] Maintenance Events 1

1/2 – RF Jam Trouble/Restore

Sent when RF jam troubles occur/are restored. The following events cause RF jam troubles:

- Wireless repeater jamming
- RF jam

3/4 – Fire Trouble/Restore

Sent when a low sensitivity, tamper or internal fault condition/restore is detected on a wireless smoke detector.

5 - Cold Start

Sent when power is restored to the alarm system after total power failure. The code is sent after 2 minutes to allow the alarm controller to stabilize.

6 - Delinquency

When the Delinquency option is off (6 - Delinquency), this code is transmitted if the alarm system has not been armed for the number of days programmed in the Delinquency Transmission Delay (Delinquency Transmission Delay).

When the Delinquency option is on, this code is transmitted when no zone activity has been detected on the system for the number of hours programmed in Delinquency Transmission Delay.

7 - Self Test Trouble

Sent when a self test trouble occurs for an outdoor PIR.

8 - Self Test Trouble Restore

Sent when a self test trouble has been restored for an outdoor PIR.

[312] Maintenance Events 2

1/2 – Installer Lead In/ Lead Out

The Installer Lead In and Lead Out reporting codes are sent when the alarm system enters and exits Installer Programming respectively.

When Installer Programming is automatically exited after PC-Link is activated, the Installer Lead Out event is not communicated until after the DLS session is complete.

3/4 – DLS Lead In/Lead Out

The DLS Lead In reporting code is sent:

- after DLS communication has been successfully established, but before the alarm system calls back the downloading computer. This code is only transmitted when call back is enabled.
- on user-initiated call-up.

The DLS Lead Out reporting code is sent when a DLS session is successfully ended.

ⓘ **Note:** If DLS is terminated by an alarm, the DLS Lead Out reporting code is not transmitted.

5/6 – SA Lead In/Lead Out

The SA Lead In reporting code is sent:

- after SA communication has been successfully established, but before the alarm system calls back the downloading computer. This code is only transmitted when call back is enabled.
- on user-initiated call-up.

The SA Lead Out reporting code is sent when an SA session is successfully ended. The SA Lead Out reporting code is still sent if the session is terminated by an alarm.

Event Buffer 75% Full

Sent when the event buffer reaches a threshold of 75% without being uploaded.

[313] Maintenance Events 3

1/2 – Firmware Update Begin/was Successful

Sent when a remote firmware update is initiated/ is successfully completed.

3 - Firmware Update Fail

Sent after an unsuccessful remote firmware update.

[314] Maintenance Events 4

1/2 – Gas Trouble/Restore

Sent when a trouble occurs or is restored on a wireless gas detector.

3/4 – Heat Trouble/Restore

Sent when a heat trouble occurs or is restored on a wireless temperature detector.

5/6 – Freeze Trouble/Restore

Sent when a freeze trouble occurs or is restored on a wireless temperature detector.

7/8 – Probe Disconnected Trouble/Restore

Sent when a probe disconnected trouble occurs or is restored on a wireless temperature detector.

[321] Receiver Events

2/4/6/8 – Receiver 1 - 4 FTC Restore

Sent when the panel detects an FTC trouble.

[331] Module Events 1

1/2 – Module AC Trouble/Restore

This reporting code is transmitted when a module's AC supply fails or has been restored. A programmable delay applies to both the trouble and the restore. This reporting code is sent to the System Maintenance call direction group.

3/4 – Module Battery Trouble/Restore

These reporting codes are transmitted when a module's battery voltage falls below 11.5VDC or is restored. These reporting codes are sent to the System Maintenance call direction group.

5/6 – Module Battery Absent/Restore

These reporting codes are transmitted when a module's battery is detected as absent or restored. These reporting codes are sent to the System Maintenance call direction group.

[332] Module Events 2

1/2 – Module Low Voltage Trouble/Restore

Sent when module voltage drops below acceptable levels or is restored.

3/4 – Module Supervisory Trouble/Restore

Sent when communication with a module is lost or restored.

5/6 – Module Aux Trouble/Restore

Sent when a high current output module or power supply module experiences an auxiliary voltage supply trouble.

[335] Module Events 5

1/2 – Output 1 Fault/Restore

This reporting code is sent when the first output on the high-current output expander module goes into fault (open or short) or is restored.

Only the first output on the high-current expander module is supervised.

[351] Alternate Communicator 1

1/2 – Alt. Comm Communications Fault/Restore

Sent when the system loses or restores communications with the alternate communicator.

3/4 – Not used

5/6 – Not used

7/8 – Alt. Comm Radio/SIM Failure/Restore

Sent when the alternate communicator experiences trouble or restore of the radio/SIM.

[352] Alternate Communicator 2

1/2 – Alternate Communicator Network Fault/Restore

Sent when the alternate communicator loses or restores communication with the network.

5/6 – Alternate Communicator Ethernet Trouble /Restore

Sent when the alternate communicator detects a network absent condition or DHCP failure or restore.

[354] Alternate Communicator 4

Receiver 1 to 4 Trouble and Restore

Sent when the alternate communicator detects a trouble or restore condition on receiver 1-4.

1/2 – Receiver 1 Trouble/Restore

3/4 – Receiver 2 Trouble/Restore

5/6 – Receiver 3 Trouble/Restore

7/8 – Receiver 4 Trouble/Restore

[355] Alternate Communicator 5

Receiver 1 to 4 Supervision Failure and Restore

Sent when the alternate communicator detects a supervision trouble for the Ethernet receiver (1, 2) or the GPRS receiver (3, 4).

1/2 – Receiver 1 Supervision Failure/Restore

3/4 – Receiver 2 Supervision Failure/Restore

5/6 – Receiver 3 Supervision Failure/Restore

7/8 – Receiver 4 Supervision Failure/Restore

[361] Wireless Device Events

1/2 – Wireless Device AC Failure/Restore

These options are used to enable wireless device AC failure/restore reporting codes. These reporting codes are sent when a wireless device experiences an AC failure/restore.

3/4 – Wireless Device Low Battery Trouble/Restore

These options are used to enable wireless device low battery trouble/restore reporting codes. These codes are sent when a wireless device experiences a low battery trouble/restore.

5/6 – Wireless Device Fault/Restore

These options are used to enable wireless device fault/restore reporting codes. This reporting code is sent when a wireless device experiences a supervisory fault.

[401] System Test Events

1/2 – Walk Test Start/End

Sent when installer walk test is initiated and terminated.

These reporting codes are in addition to the alarm reporting codes for the zones that are tripped during the walk test period, if configured in section [382] Communicator Option 3.

3 - Periodic Test Transmission

Sent when the test transmission programmed in section [401] System Test Events occurs.

4 - Periodic Test Transmission with Trouble

Sent when any of the following trouble conditions are present during a periodic test transmission:

- Fire Zone Trouble
- Battery Trouble
- Fire Zone Alarm (2-Wire Smoke)
- Aux Trouble
- Fire Trouble
- Bell Trouble
- Fire Tamper/Low Sensitivity (WLS)
- Module Supervisory
- Fire Zones Bypassed
- Ground Fault
- Fire Supervisory (Wireless)
- TLM Trouble
- AC Trouble
- FTC Trouble

This reporting code is sent in place of the standard Periodic Test Transmission code.

5 - System Test

Sent when a manual system test is performed ([*][6][Master Code][04]).

System Communications

The programming options in this section are used to configure communications between the alarm system and the central station.

[309] System Call Direction

Use this programming option to select the central station receivers that system events are communicated to. A system event can be sent to multiple receivers.

[001] Maintenance Events/Restores (all troubles except tampers)

These options control which receiver paths are enabled for maintenance events. To assign a maintenance event to a receiver, select from the following list:

[01] Receiver 1

[02] Receiver 2

[03] Receiver 3

[04] Receiver 4

[002] Test Transmissions

These options control which receiver paths are enabled for test transmission events. To assign a test transmission event to a receiver, select from the following list:

[01] Receiver 1

[02] Receiver 2

[03] Receiver 3

[04] Receiver 4

[310] Account Codes

These programming sections are used to set the system and partition account codes.

[000] System Account Code

The system account code is used to identify the alarm system when communicating system events to the central station. The system account code can be either 4 or 6 digits long. Program a 6-digit code only when using the SIA reporting format. SIA uses this account code for all partitions and system events. All other reporting formats use a 4-digit system account code to report system maintenance (e.g., low battery, zone fault) and test transmission events. To program a 4-digit code, add FF to the last two digits.

[001]-[008] Partition Account Codes

Use these sections to program account codes for each partition.

When using formats other than SIA, these account codes identify the alarm system to the central station when communicating partition-specific events.

ⓘ **Note:** The system will not communicate if the account code is not programmed. When this condition occurs, Account Code Not Programmed is briefly displayed on the keypad when exiting Installer Programming mode.

ⓘ **Note:** If no phone numbers are programmed, the error message does not occur.

[311]-[318] Partition Call Directions

Use this programming option to select the central station receivers that partition events are communicated to. Call directions can be programmed for each partition. Each event can be sent to one of four receivers.

[001] Alarm/ Restore

These options control which receiver paths are enabled for Partition 1-8 Alarm and Restore event reporting codes.

To assign an event to a receiver, select one of the following options:

[01] Receiver 1

[02] Receiver 2

[03] Receiver 3

[04] Receiver 4

[002] Tampers (Including System Tampers)/ Restore

These options control which receiver paths are enabled for Partition 1-8 Tamper and Restore event reporting codes.

To assign an event to a receiver, select one of the following options:

[01] Receiver 1

[02] Receiver 2

[03] Receiver 3

[04] Receiver 4

[003] Openings/ Closing

These options control which receiver paths are enabled for Partition 1-8 Opening and Closing event reporting codes. To assign an event to a receiver, select one of the following options:

[01] Receiver 1

[02] Receiver 2

[03] Receiver 3

[04] Receiver 4

[350] Communicator Formats

Use this programming option to assign a communicator format to each of the four receivers programmed in section [301]. The available communicator formats are as follows:

03	DTMF Contact ID
04	SIA FSK

To assign a communications format, select a receiver (option [001]-[004]) then enter the 2-digit code corresponding to the chosen format. For detailed descriptions of each format, Reporting Codes.

[377] Communication Variables

[001] – Swinger Shutdown

Alarms/Restores

This value defines the number of communication attempts made for alarm/restore events, per zone, before the zone goes into swinger shutdown. Valid entries are 000 to 014. For CP-01, entries are from 001-006.

Once the programmed number of alarm/restore events have been communicated, no further alarm/restore events for the zone are communicated until swinger shutdown is reset. The last restore event is not communicated until swinger is cleared. For example, if the swinger shutdown limit for zone alarms is set to [003], the cycle is as follows: alarm/restore, alarm/restore, alarm...8 hours or arm/disarm...restore.

The bell output is not activated for alarms on zones that have exceeded the swinger shutdown counter limit. Swinger shutdown on global zones log once to the system area.

ⓘ **Note:** Swinger shutdown resets on all partitions when any partition on the system is armed or disarmed, or every day at midnight. For CP-01, swinger shutdown is restored after 8 hours of inactivity.

Once reset, the alarm system communicates normally.

ⓘ **Note:** CP-01 The event buffer can follow swinger shutdown if enabled.

Tampers/Restores

This value defines the number of times the same system tamper event occurs before going into swinger shutdown. Valid entries are 000 to 014.

Maintenance Troubles/Restores

This value defines the number of times the same system Maintenance (trouble) type event occurs before going into swinger shutdown. Fire troubles follow the Maintenance Swinger Shutdown variable.

[002] – Communication Delays

Transmission Delay (seconds)

This value defines the delay before an alarm is transmitted.

The delay is for zones which have the Transmission Delay attribute enabled. Valid entries are from 000 to 255 seconds (0-45 seconds for CP-01). Each partition shares the same active timer. If the

delay is already active due to an alarm on a different partition, any new activity on another partition does not restart the communications delay timer.

Burglary verified events are postponed until after the transmission delay expires. When a valid disarming procedure is used while the transmission delay is active, a communications canceled message is briefly displayed on the keypad when the delay is canceled.

ⓘ **Note:** NA For UL/ULC listed installations, the entry delay plus communication delay cannot exceed 45 seconds.

AC Failure Communication Delay (minutes or hours)

This value determines the delay before an AC failure or AC restore is reported. The AC failure or restore is still displayed immediately. Valid entries are from 000 to 255 minutes/hours (max. 180 minutes for UL commercial installations). Selection of minutes or hours for the delay is set in section [382] Communicator Option 3.

ⓘ **Note:** If AC Failure Communications Delay is programmed as 000, the AC Failure Trouble reporting code is sent immediately.

ⓘ **Note:** For ULC commercial fire monitoring, the setting shall be 180 minutes.

TLM Trouble Delay

Use this section to program the number of valid checks (3 second intervals) required before a telephone line trouble is generated. Valid entries are 000-255 for trouble annunciation and transmission delays of 3 to 765 Seconds (12.75 Minutes).

Wireless Zone Low Battery Transmission Delay (in days)

When a zone reports a low battery condition, the trouble is indicated immediately on the keypad, but the transmission to the monitoring station is delayed by the number of days programmed in this section. If the low battery condition is not corrected before the delay expires, the low battery condition is transmitted. The Low Battery Restore transmission is not delayed.

Delinquency Transmission Delay

The value in this section determines the period of time before a delinquency event is generated.

Delinquency delay is measured in days if using closing delinquency or hours if using activity delinquency as programmed in section [311] option 6. Valid entries are [001]-[255] or [000] to disable.

Communications Cancel Window

After the transmission Delay expires and a zone alarm is transmitted, the communications cancel window begins.

If an access code is entered during this window, a reporting code is communicated and logged. If the window expires without an access code entry or a code is entered after the window, the communications canceled event is not logged or communicated.

ⓘ **Note:** The cancel window does not start after an [F][M][P] key alarm.

[003] – Periodic Test Transmission Cycle

This value determines the period between test transmissions. Valid entries are [000]-[255]. Whether this interval is in hours or days is determined by section [022], option 4.

ⓘ **Note:** NA For UL residential fire installations, the test interval is 7 days.

ⓘ **Note:** For ULC listed installations, the test interval is 24 hours.

[004] – Periodic Test Transmission Time of Day

Enter a 4-digit time using the 24-hour clock format (HH:MM).

Valid entries are from 00 to 23 for the hours (HH) and 00 to 59 for the minutes (MM).

To disable the test transmission time of day, enter [9999] in this section.

Note: This time should not be set for the same time as Daylight Savings time.

Note: For UL listed installations, the default time is programmed for 04:45am. The panel will generate a random test transmission time within a +/- 60 minute window. Any other value programmed by the installer will not be affected.

[011] – Maximum Dialing Attempts

This section is used to program the number of dialing attempts made to each telephone number when communicating. Valid entries are 002-005.

Note: NA For UL/ULC listed installations, this value must be set to 005.

[012] – Delay Between PSTN Attempts

This programmable timer adds a delay before the next call is attempted over PSTN. Valid entries are 000-255, with a default of 3 seconds (making a total of 8 seconds: 3-second delay + standard 5-second dial tone search).

[013] – Delay Between Force Attempts

This programming option is used to set the length of time the alarm system waits between the first dialing attempt and the force dial attempt.

Valid Entries are 001-255 seconds. Default is 020.

[014] – Post Dial Wait for Handshake

This option is used to program the length of time the communicator waits for a valid initial handshake from the receiver after dialing the programmed telephone number. Valid entries are 001 to 255 seconds.

Note: UL Maximum 45 seconds for UL installations.

[015] – T-Link Wait for Ack

This option is used to program the length of time the communicator waits for an acknowledge after transmitting via IP/GS. Valid entries are 001 to 255. Default is 60 seconds.

[016] –IP/Cellular Fault Check Timer

This section is used to program the number of poll commands sent without valid poll responses before the alarm system generates a trouble condition. The checks occur at 3-second intervals.

Valid entries are 003-255 for trouble annunciation and transmission.

The trouble restore is not delayed.

[380] Communicator Option 1

1 - Communications Enabled/Disabled

ON: (Default) The system communicator is enabled and all events with reporting codes are reported to the monitoring station. Refer to the Telephone Number, Reporting Code and Call Direction programming sections.

OFF: The system communicator is disabled and no events are reported to the monitoring station.

Note: Disabling the communicator clears all FTC troubles.

2 - Restore On Bell Timeout

ON: Zone restore reporting codes are not transmitted until the zone has been restored and the bell timeout has expired. If the zone is not restored when the bell cut-off time expires, the restore is transmitted when the zone physically restores or when the system is disarmed.

ⓘ **Note:** 24-hour zones will not restore until the zone is physically restored

OFF: Zone restore reporting codes are transmitted when the zone is physically restored. If zones are still active when the system is disarmed, the restore codes are transmitted when the system is disarmed.

3 - Pulse Dialing

ON: The alarm system dials telephone numbers using pulse (rotary) dialing.

OFF: The alarm system dials telephone numbers using DTMF (dual tone multi-frequency) touch-tone dialing.

4 - Pulse Dial after 5th Attempt

ON: If DTMF dialing is enabled, the alarm system dials telephone numbers using DTMF dialing for the first 4 attempts. If unsuccessful, the alarm system switches to pulse (rotary) dialing for the remaining attempts.

OFF: If DTMF dialing is enabled, the alarm system dials telephone numbers using DTMF dialing for all dialing attempts.

5 - Parallel Communications

ON: Parallel communications is enabled. The alarm system attempts to communicate through all available receivers at the same time. Once acknowledgment is provided by any of the receivers, the alarm system communicates the next event. If more than one receiver is configured for PSTN, the backup procedure described below is followed.

OFF: Parallel communications is disabled. If receiver 1 fails, the alarm system attempts to communicate with the next available receiver (2-4) in sequence.

ⓘ **Note:** See [384] Communicator Backup Options for communicator backup programming.

6 - Alternate Dial

ON: After each failed dialing attempt, the communicator switches to the next backup receiver in the sequence:

- Receiver 2 backs up Receiver 1
- Receiver 3 backs up Receiver 2
- Receiver 4 backs up Receiver 3

This continues until communication is successful or the sequence has been repeated 5 times (depending on the number of maximum dialing attempts). If all 5 attempts fail, an FTC trouble for the primary phone number is logged. All backup receivers automatically use the same call directions and format as the primary receiver.

OFF: After 5 failed attempts to communicate with the primary receiver, the communicator switches to the next backup receiver in the sequence and makes up to 5 more attempts. This continues until communication is successful or until all backup receivers fail, at which point an FTC trouble for the primary number is logged.

7 - Reduced Dialing Attempts

ON: If a TLM trouble is present, The alarm system immediately attempts to call the backup receiver. This option only applies to PSTN. Backup communications must be enabled. See option 5, Parallel Communications.

A minimum of two receivers should be enabled for this feature to operate as intended. This feature should not be enabled unless the panel is programmed to use backup communication paths.

OFF: If a TLM trouble is present, the number of dialing attempts programmed shall be attempted before moving on to the backup receiver.

8 - Activity Delinquency

ON: Inactivity on a partition for a programmed duration (section [377] option 002, Delinquency Transmission Delay) transmits a Delinquency code to the central station. This option is designed to help monitor the elderly or disabled. The counter is reset if zone activity is detected or if the system is armed. The Delinquency Transmission Delay is in hours.

ⓘ **Note:** Delinquency code is not transmitted while Away armed. Activity on bypassed zones does not affect this timer.

OFF: The Delinquency reporting code is sent when the programmed number of days for delinquency (section [377]) expires without the partition being Armed. Once the code is sent, the timer is not started again until the partition has been armed. Each day programmed in the counter represents one day plus the time it takes for the partition to reach midnight. To disable this feature, program 000 in section [377]>[002] option 5.

[381] Communicator Option 2

1 - Keypad Ringback

ON: When the Opening After Alarm reporting code is successfully transmitted to a programmed telephone number, the keypad emits a series of 8 beeps to confirm to the occupant that the code was sent and received. Ringback occurs for each successfully reported Opening After Alarm code.

OFF: When the Opening After Alarm reporting code is successfully transmitted to a programmed telephone number, the keypad does not sound ringback.

2 - Bell Ringback

ON: When the Opening After Alarm reporting code is successfully transmitted to a programmed telephone number, the siren emits a series of 8 squawks to confirm to the occupant that the code was sent and received. Ringback occurs for each successfully reported Opening After Alarm code.

OFF: When the Opening After Alarm reporting code is successfully transmitted to a programmed telephone number, the siren does not sound ringback.

4 - Closing Confirmation Enabled/Disabled

ON: When a Closing reporting code is successfully transmitted to a programmed telephone number, the keypad emits a series of 8 beeps to confirm to the occupant that the Closing Code was sent and received.

OFF: No keypad ringback is generated when a Closing reporting code is successfully transmitted.

8 - Communications Priority Enabled/Disabled

About this task:
ON: Events follow the priority level indicated in ULC-S559 standard.
Concurrent event communications are prioritized in the following order (highest to lowest priority):

1. Fire Alarms
2. CO Alarm
3. Fire Supervisories
4. Fire Trouble
5. Monitoring (Medical, Panic or Security)
6. All others such as restorals for fire alarms, supervisories, troubles and monitoring.

7. FTC'ed events

Result
OFF: Events are communicated in the order they occur.

ⓘ **Note:** Must be ON for ULC commercial fire monitoring listed installations.

[382] Communicator Option 3

1 - Not Used

2 - Walk Test Communications

ON: Zone alarms that occur during Walk Test are communicated if programmed to do so.

OFF: Zone alarms during Walk Test are not communicated. FMP key alarms are still communicated.

4 - Call Waiting Cancel

ON: The call waiting cancel string ([304] Call Waiting Cancel String) is used on the first attempt to dial each phone number. It is not used on any further dialing attempts.

OFF: The call waiting cancel string is not dialed.

55 - Alternate Communicator Enable/Disable

ON: The system communicates using the alternate communicator. All related programming options, reporting and supervision are enabled when programmed via PC-Link2.

OFF: The alternate communicator and all associated programming functionality are disabled. The auto time update feature is disabled.

ⓘ **Note:** If alternate communicator troubles are present when the communicator is disabled, the troubles are logged, communicated, and cleared from [*][2]. When the communicator is re-enabled, the trouble conditions are again logged, communicated and indicated in [*][2]. This option must be enabled when attempting to perform a firmware upgrade using the PC-link header.

6 - AC Failure Communication Delay in Hours/Minutes

ON: The AC failure communication delay (section [377]>[002] option 2) is programmed in hours.

OFF: The AC failure communication delay is programmed in minutes.

8 - Tamper Limit

ON: When disarmed, the system only communicates module tampers. Zone tampers are not communicated.

OFF: When disarmed, the system communicates all tampers.

[383] Communicator Option 4

1 - Phone Number Account Code

ON: The account code communicated to the central station follows the phone number the event is programmed to communicate on (programmed in section [310] Account Codes):

- Receiver 1 all events will follow partition 1 account code
- Receiver 2 all events will follow partition 2 account code
- Receiver 3 all events will follow partition 3 account code
- Receiver 4 all events will follow partition 4 account code

OFF: Events follow the account code assigned to each partition when communicating.

ⓘ **Note:** This feature only works with CID

2 - 4 or 6-Digit System Account Code

ON: The programmable account code in section [310][000] is 6 digits long (used for SIA format).

OFF: The programmable account code in section [310][000] is 4 digits long.

5 - Communicate FTC Events

ON: The alarm system communicates FTC (failure to communicate) events. The FTC Trouble/Restore reporting code transmission follows the call direction the events are assigned to.

OFF: FTC events are not communicated. FTC Trouble/Restore reporting codes are communicated to the Maintenance call direction group after the next successful communication.

6 - Not used

[384] Communicator Backup Options

2 - Receiver 2 Backup Option

ON: Receiver 2 backs up Receiver 1. Receiver 2 is only used if an FTC event is detected on Receiver 1.

Receiver 2 uses the same format programmed for Receiver 1.

OFF: Receiver 2 is independent and will communicate if a number and format are programmed.

3 - Receiver 3 Backup Option

ON: Receiver 3 backs up Receiver 2. Receiver 3 is only used if an FTC event is detected on Receiver 2.

Receiver 3 uses the same format programmed for Receiver 2.

OFF: Receiver 3 is independent and will communicate if a number and format are programmed.

Receiver 4 Backup Option

ON: Receiver 4 backs up Receiver 3. Receiver 4 is only used if an FTC event is detected on Receiver 3.

Receiver 4 uses the same format programmed for Receiver 3.

OFF: Receiver 4 is independent and will communicate if a number and format are programmed.

[385] Audio Module Talk\Listen Mask

1- Talk/Listen on Receiver 1

ON: 2-way audio sessions can be initiated over receiver 1.

OFF: Regardless of other 2-way audio programming, 2-way audio sessions cannot be initiated over receiver 1.

2- Talk/Listen on Receiver 2

ON: 2-way audio sessions can be initiated over receiver 2.

OFF: Regardless of other 2-way audio programming, 2-way audio sessions cannot be initiated over receiver 2.

3-Talk/Listen on Receiver 3

ON: 2-way audio sessions can be initiated over receiver 3.

OFF: Regardless of other 2-way audio programming, 2-way audio sessions cannot be initiated over receiver 3.

4-Talk/Listen on Receiver 4

ON: 2-way audio sessions can be initiated over receiver 4.

OFF: Regardless of other 2-way audio programming, 2-way audio sessions cannot be initiated over receiver 4.

DLS Programming

Downloading allows programming of the entire alarm system via a computer. All functions and features, changes and status, such as trouble conditions and open zones, can be viewed or programmed by downloading.

The following downloading options are available:

- 6-hour window on start up: When the alarm system is powered up, downloading access is available for 6 hours. This provides the option of downloading without having to complete any keypad programming.
- Double call method: The installer initiates a downloading window by calling the alarm system, hanging up, then calling back again.
- User enabled DLS window: The user initiates a downloading window using [*][6][Master code][05]. This can be a 6-hour window where the installer initiates and terminates downloading as many times as necessary, or it can be a 1-hour, 1 use window.
- User initiated call-up: the user can initiate a downloading session using [*][6][Master Code][06].
- On-site downloading using PC-Link: The installer connects a computer directly to the alarm system to perform on-site downloading.
- Auto event buffer upload: The Event buffer is automatically uploaded to the DLS/SA computer when it reaches 75% full.

Refer to the DLS/SA programming sections described below for configuration options.

[401] DLS/SA Options

1 - Double Call

ON: Calls for downloading or SA are answered if a successful double call routine is detected. Have the downloading computer call the system and let the telephone line ring once or twice. After 1 or 2 rings, hang up. If called back within the duration of the double call timer (section [405]), the alarm system answers on the first ring.

OFF : Incoming calls are not answered using the double call routine unless the user enables the DLS window.

ⓘ **Note:** This feature controls the DLS window for PSTN connections only.

2 - User Enables/Disables DLS

ON : The [*][6][Master Code][05] command enables a 6-hour window where, on power-up, downloading calls are answered if a successful double call routine is detected.

OFF: The user cannot enable a downloading window.

3 - DLS CallBack

ON : When a downloading call is answered, both the computer and the alarm system hang up. The alarm system then calls the downloading computer back using the downloading telephone number and begins the DLS session.

ⓘ **Note:** Disable this option if using more than one downloading computer.

OFF : After successful validation, the downloading computer gains immediate access to the alarm system.

4 - User Call-Up

ON : A single call attempt can be made to the downloading computer using [*][6][Master Code][06].

OFF: [*][6][Master Code][06] does not allow initiation of a downloading session.

6 - Panel Call-Up and Baud Rate

ON : When a DLS/SA session is initiated by the user, the initial header is sent at 300 baud.

OFF: When a DLS/SA session is initiated by the user, the initial header is sent at 110 baud. The alarm system will then switch to 300 baud in order to receive the response from the DLS computer.

7 - Alternate Communicator DLS

ON: When this feature is enabled, the alarm system responds to DLS requests through the alternate communicator IP or cellular paths at any time, regardless of whether the DLS window is active or not.

However, if a pre-defined number of consecutive incorrect DLS access codes is detected (Remote Lockout DLS) while trying to establish a connection, alternate communicator DLS access is locked out until the next hour roll-over.

OFF: When this feature is disabled, the alarm system only responds to DLS requests through the alternate communicator IP or cellular paths when the DLS window is active.

The DLS/SA window is active following a power up or if enabled using [*][6][maser code][05] (System Service/DLS).

ⓘ **Note:** This option controls DLS over alternate communicator only.

[402] PSTN DLS Phone Number Programming

This section is used to program the telephone number for DLS downloading over PSTN. This phone number is used for User Call Up, Periodic DLS and DLS Call back. If no phone number is programmed, the system attempts to use the alternate communicator IP path (if configured).

The maximum number length is 32 digits.

[403] DLS Access Code

This 6-digit hexadecimal code allows the alarm system to confirm the identity of the downloading computer.

If the code does not match the computer, the alarm system does not allow DLS access.

Once a DLS connection is established, the operator is allowed three attempts to enter the correct access code. If these attempts are unsuccessful, the alarm system disconnects and a new attempt must be made.

If cellular or IP paths are used for the DLS connection, a pre-programmed number of unsuccessful attempts causes a 1-hour DLS lockout. Number of attempts is programmed in section [012].

[404] DLS/SA Panel ID

This 10-digit hexadecimal code identifies the alarm system to the downloading computer.

[405] PSTN Double Call Timer

Use this section to program the amount of time that can elapse between the first and second call when using Double Call downloading. Valid entries are 001 to 255 (seconds).

[406] PSTN Number of Rings to Answer On

The value in this section determines how many rings are required in order to establish a DLS connection. Default value is 000 rings. Valid entries are [000]-[020].

ⓘ **Note:** If Double-Call option and Number of Rings to Answer are enabled, either one will work depending on how the installer calls the alarm system.

[407] SA Access Code

This 6-digit hexadecimal code allows the alarm system to confirm the identity of the downloading computer.

If the code does not match the computer, the alarm system does not allow uploading/downloading.

Programming the access code as FFFFFF disables SA access.

Once an SA connection is established, multiple attempts to input the correct downloading access code (programmed in [012]) is allowed.

The operator is allowed three attempts to enter the correct access code. If these attempts are unsuccessful, the alarm system disconnects and a new attempt must be made.

If cellular or IP paths are used for the SA connection, up to five unsuccessful attempts causes a 1-hour SA lockout (Remote Lockout DLS).

[410] Automatic DLS/SA Options

[001] – Auto DLS Options

Periodic DLS

ON: Upload/download commands programmed in advance (batch files) are periodically downloaded to the DLS computer.

See below to program the times and days when this occurs.

ⓘ **Note:** The computer must be waiting for a call in order for this feature to work.

OFF: The alarm system does not periodically call the downloading computer.

DLS on Event Buffer %75 Full

ON: The alarm system automatically calls the downloading computer with DLS when the Event Buffer 75% full event occurs.

This option is independent of the actual transmission of the Event Buffer 75% full event (the event does not need to be transmitted for the panel to perform the automatic upload).

The panel first communicates the Event Buffer 75% full event (if enabled) using either PSTN or IP and then performs the automatic download.

OFF: The alarm system does not automatically call the downloading computer when the Event Buffer 75% full event occurs.

DLS on Programming Change

ON: When the panel returns to the "Ready to Arm" screen after a programming change, 15 minutes later the alarm system automatically calls the downloading computer.

OFF: The alarm system does not automatically call the downloading computer when the system programming changes.

[002] Periodic DLS Days

This section is used to program the number of days between periodic DLS downloads. Valid entries are from 001 to 255 days.

[003] Periodic DLS Time

This section is used to program the time of day periodic DLS download takes place. Time is in 24-hour format and the default is 00:00 (midnight).

[007] Delay Call Window

This section is used to define a user call-up window. Users can only initiate a downloading session during this window. When a value is entered in this section, the setting in Periodic DLS Time (see the option above) is overridden. When 00:00 is entered in this field, the alarm system initiates a DLS call at the time programmed in Periodic DLS Time. Start and end times must be defined using 24-hour format (e.g., 13:30) and cannot span a day (e.g., start time of 23:00 and an end time of 01:00).

Virtual Inputs

When using an alternate communicator, virtual zones can be mapped to configured system zones.

[560][001]-[032]

Assign corresponding 3 digit zone number to virtual input and then the virtual input can be controlled by an alternate communicator. Refer to the communicator manual for more information

Schedule Programming

The sections described below are used for programming scheduled operating times for PGM command outputs 1-4.

[601]-[604] Programming Schedule 1-4

These sections are used to define schedules for PGM command outputs 1-4 operation. When a PGM is configured for timed output operation, it activates at the programmed start time and will turn off after the programmed duration. For example, 5 seconds.

Each schedule contains 4 intervals, for Command Outputs 1-4. Within each interval, a start time and end time can be programmed for each day of the week. Holiday schedules 1-4 can also be selected. To enable the command output to follow a schedule, program the command output in section [009] and then enter schedule 001 - 004 in section [011].

[101]-[102] Set Start Time/ End Time

Used to program the time of day the schedule interval begins and ends. (HH:MM). Valid entries are 0000-2359 and 9999. The end time must be equal to or greater than the start time. 9999 is used when an interval needs to extend past 24 hours. To do this, program the start time of the first interval then the end time with 9999. Program the start time of the second interval as 9999 and the end time with the desired time when the output should deactivate. Select the day of the week the schedule will end.

ⓘ **Note:** If two intervals in a schedule are programmed with the same start time, the schedule follows the interval with the longest end time.

[103] Days Assignment

Used to program the day of the week that the schedule interval starts and ends. Use the scroll keys to select a day then toggle the option on. Multiple days of the week can be enabled.

[104] Holiday Assignment

Program PGMs to follow holiday schedule group 1-4. Select (Y) to enable. If all days of the week for an interval are disabled (N), the schedule activates on the enabled holidays.

[711]-[714] Holiday Schedules

Use this section to program holiday schedules. During holiday schedules, other scheduled events do not occur. Enter section 711 to 714 for holiday group 1 to 4.

Each of the four available holiday groups can have up to 99 holiday schedules programmed.

[001]-[099] Holiday Dates 1-99

Program holiday dates in the following format: MMDDYY

MM valid entries are 01 to 12

DD valid entries are 01 to 31

YY valid entries are 00 to 99

[802] Audio Verification Module Programming

This module provides 2-way audio communication between the central station and the occupants of the premises.

ⓘ **Note:** For complete programming descriptions and worksheets, see the Audio Verification module installation manual.

Wireless Programming

[804] Wireless Programming

This programming section is used to enroll, program and delete wireless devices. Note that the HSM2HOSTx wireless transceiver or RF model keypad must be installed in order to enroll wireless devices.

[000] – Wireless Device Enrollment

To enroll a wireless device using this method, press and hold the Enroll button on the device for 2-5 seconds until the LED illuminates then release the button. The alarm system automatically discovers the device and the keypad displays a confirmation message. The device ID, type and the next available zone number are displayed. Press [*] to accept or scroll to another available zone number. Batteries must be installed in the wireless device in order to enroll.

ⓘ **Note:** Ensure wireless signal strength is adequate before mounting the wireless device. See the instructions provided with the wireless device for details.

ⓘ **Note:** For complete wireless device programming descriptions and worksheets, see the HSM2Hostx wireless transceiver installation manual.

[850] Cellular Signal Strength

This section is used to view both the cellular signal strength and the radio technology in use.

Table 22: Cellular Technology

Display	Technology
GP	GPRS
ED	EDGE
HS	HSPA
H+	HSPA
CD	CDMA
EV	EVDO

5 bars indicate maximum signal strength. 0 bars indicate the communicator is not connected to the network.

[851] Alternate Communicator Programming

See the alternate communicator installation manual for programming instructions.

[860] Display Keypad Slot Number

The 2-digit slot number of the keypad being used is displayed in this read only section.

[861]-[876] Keypad Programming

Use section [861] to [876] to configure keypads 1 to 16. For information on keypad programming, refer to the installation sheet supplied with the keypad.

ⓘ **Note:** For EN50131 compliant installations [861][021] options 1 and 2 must be disabled.

[899] Template Programming

Template programming allows quick programming of the minimum functions required for basic operation. This section is used to view current template programming options and to define certain system parameters. Press the (#) key to accept the displayed value and advance to the next option. The following options are available:

- 5-digit Template Code: Displays the current 5-digit template programming code (default: 00000). Each digit in the code selects a set of pre-defined programming options, as described below:

  - Digit 1 - zone 1-8 definition options
  - Digit 2 - system EOL options
  - Digit 3 - alarm controller communications options
  - Digit 4 - reporting code configurations
  - Digit 5 - DLS connection options

- Central Station Telephone Number: The phone number used to contact the central monitoring station (32 character limit).
- Central Station Account Code: The account code used in programming section [310]. This is a 4 or 6-digit entry.
- Partition Account Code: Used to identify partition-specific events. All 4 digits must be entered in order to complete the entry.
- This account code is entered into programming section [310][001].
- DLS Access Code: The 6-digit DLS access code used in programming section [403].
- Partition 1 Entry Delay: The 3-digit entry delay duration for partition 1, in seconds, used in programming [005][001] option 1.
- Partition 1 Exit Delay: The 3-digit exit delay duration for partition 1, in seconds, used in programming section [005][001] option 3.
- Installer Code: The 4, 6 or 8-digit installer access code used in programming section [006][001].

For more information on template programming, .

Systems Information

[900] System Information

[000] – Control Panel Version

This read-only section contains the model number, software version, hardware revision, of the alarm controller. For example, an entry of 1234 is read as version 12.34.

[001]-[524] – Module Information

This read-only section is used to view the model number, software version, and hardware revision information of the modules enrolled on the alarm system.

To view information for a specific module, scroll to the corresponding section:

[001]-[016] keypads

[101]-[115] 8-zone expansion module

[201] 8-output expansion module

[460] Alternate Communicator

[461] HSM2Host module

[501]-[504] 1A power supply module

[521]-[524] high-current output modules 1-4

[901] Installer Walk Test Mode Enable/Disable

This mode tests the operation of each detector in the system. Enter section [901] to initiate a walk test. While in Walk Test mode, the Ready, Armed, and Trouble LED's on the keypad flash to indicate that the test is active. When a zone is tripped during the test, a 2-second tone sounds on all system keypads to indicate that the zone is working correctly.

After 10 minutes without zone activity, the alarm system emits 5 beeps every 10 seconds from all keypads. After another 5 minutes of inactivity, Walk Test terminates automatically.

To manually exit walk test mode, enter [901] again.

Module Programming

Use this section to add, remove and confirm the following modules:

- Keypads Compatible Devices
- 8-zone expander module (HSM2108)
- 8-output expander module (HSM2208)
- Power supply (HSM2300)
- 4-output power supply (HSM2204)
- Wireless transceiver (HSM2HOSTx)
- Audio Verification Module (HSM2955)

Once added, modules are supervised by the system.

[902] Add/Remove Modules

Modules can be enrolled automatically our manually. In either case, the serial number of the device is used as an identifier.

Select one of the enrollment options described below.

[000] – Auto Enroll Modules

When this mode is selected, the alarm system automatically enrolls all modules connected to the Corbus. The total number of modules currently enrolled are displayed on the keypad.

- Enter sub-section [000] to begin auto enrollment of all new modules. The auto enroll screen will show the following:

  - KP = Number of keypad type modules
  - IO = Number of zone and output type modules
  - M = Number of other type modules

Devices are assigned to the next available slot. The slot assignment can be modified using subsections [002] and [003].

[001] – Enroll Modules

To enroll modules individually:

1. Enter programming section [902][001].
2. When prompted, key in the serial number of the module found on the PCB. An error tone is sounded if an invalid serial number is used.
3. To cancel enrollment of a module, press [#].

[002] – Module Slot Assignment (LED, LCD, ICON)

This section is used to change the slot number a module is enrolled in. To change the slot number:

1. Enter programming section [902][002].
2. Key in the serial number of the module.
3. When prompted, key in the new two-digit slot number. The previous slot assignment is replaced with the new one. An error tone sounds if an invalid slot number is keyed in.

[003] – Edit Module Slot Assignment (LCD Keypad Only)

Like [002], this section is also used to change the slot number of a module. With this option, however, the serial number is not required. To change the slot number:

1. Enter programming section [902][002].
2. Use the scroll keys to locate the module then press [*] to select.
3. Key in the new two-digit slot number. The previous slot assignment is replaced with the new one. An error tone sounds if an invalid slot number is keyed in.

Deleting Modules

The following sections are used to remove modules from the system:

[101] – Keypads

[102] – 8-zone Expander Modules

[103] – 8-output Expander Modules

[106] – HSM2Host

[108] – HSM2955

[109] – Power Supply

[110] – 4 High Current Output

1. After entering section [902], scroll to the module type you want to delete (101-110).
2. Press [*] to select the module type then scroll to the specific module you want to delete.
3. Press [*] to select the module then, when prompted, press [*] again to delete.

[903] Confirm Module

About this task:
The following sections are used to confirm enrollment of individual modules, their serial and slot numbers, and to locate them physically:
[000] – View All Modules
[101] – Keypads
[102] – 8-zone Expander Modules
[103] – 8-output Expander Modules
[106] – HSM2Host
[108] – HSM2955
[109] – Power Supply
[110] – 4 High Current Output
To confirm a module:

1. Enter section [903]>[000] to view all enrolled modules or scroll to the module type you want to confirm (101-110).
2. Press [*] to select the module type then scroll to the specific module you want to confirm. Press [*] to enter Confirmation mode. The module's serial number and slot number are displayed on the keypad and the status LEDs on the device flash. This continues until confirmation mode for the device is exited via the [#] key.
   - **Note:** Keypad Blanking (section [016], option 3) must be disabled to confirm keypads.
   - **Note:** When using an LED or ICON keypad, use the following table to match the number displayed on the keypad to a module.

Table 23: Table 19 Module numbers when programming with an LED or ICON keypad

# displayed on keypad	Model #	Description
18	HSM2108	Neo 8 zone expander module
19	HSM2HOST	Neo PowerG wireless tranceiver module
24	HSM2204	Neo 4 high current output module
28	HSM2208	Neo 8 output expander module
30	HSM2300	Neo 1A power supply module
50	HS2LCD	Neo 2x16 LCD keypad

Table 23: Table 19 Module numbers when programming with an LED or ICON keypad

# displayed on keypad	Model #	Description
51	HS2ICN	Neo Icon Keypad
52	HS2LCDP	Neo 2x16 LCD keypad with Prox
53	HS2ICNP	Neo Icon Keypad with Prox
56	HS2LED	Neo 16 LED keypad
57	HS2TCHP	Neo Touchscreen Keypad with Prox
59	HS2LCDRF	Neo 2x16 LCD RFK keypad
5A	HS2ICNRF	Neo Icon RFK Keypad
5B	HS2LCDRFP	Neo 2x16 LCD RFK keypad with Prox
5C	HS2ICNRFP	Neo Icon RFK Keypad with Prox
60	HS2LCDWF	Neo 2x16 LCD wirefree keypad
67	HS2TCHWF	Neo Touchscreen wirefree Keypad
6B	HS2LCDWFP	Neo 2x16 LCD wirefree keypad with Prox
6D	HS2LCDWFPV	Neo 2x16 LCD wirefree keypad with Prox and Voice
95	HSM2955	Neo Audio alarm verification module
96	HSM2955R	Neo Audio alarm verification module with Recording

Testing

[904] Wireless Placement Test

This test is used to determine RF signal status for wireless devices and can be performed at a system keypad or at the individual device. These instructions pertain to testing at the keypad. For instructions on placement testing at the device, refer to the installation sheet included with the wireless equipment.

The following test modes are available:

[001]-[128] Placement Test Zones 1-128

Test wireless devices individually by zone (LCD keypads only).

[521]-[528] Placement Test Repeaters 1-8

Test each enrolled wireless repeater (LCD keypads only).

[551]-[566] Placement Test Sirens 1-16

Test each enrolled wireless siren (LCD keypads only).

[601]-[632] Placement Test Wireless keys 1-32

Test individual wireless keys. Once in this section, press a button on the wireless key to begin the test (LCD keypads only).

[701]-[716] Placement Test Wireless Keypads 1-16

Test each enrolled wireless keypad (LCD keypads only).

Two test results are provided:

- 24-hour: Average status results received during a 24-hour period.
- Now: Signal status results of the current test.

During testing, the Ready and Armed LED's flash to indicate data is being received. A flashing Trouble LED indicates RF interference. The following status indicators may be displayed:

Table 24: Table 19 Wireless Device Status Indications

Keypad	Status
Strong	Strong signal strength
Good	Good signal strength
Poor	Poor signal strength
1-Way	The device is operating in 1-way mode only. The alarm panel cannot configure or control the device
Not Test	Displayed as the Now result if no test was performed.
None	Always displayed as the 24-hour result when testing wireless keys.

[912] Soak Test

This feature is used to diagnose false alarms. After a false alarm has occurred on a zone, Soak Test mode impedes any audible alarm conditions or additional false alarm reporting. A record of the false alarm is stored for diagnostic purposes.

[000] – Soak Test Duration

This option is used to program the length of time the system remains in soak test. The default is 14 days.

[001]-[128] Zone Soak Test

Soak test can be performed on individual zones. The zone remains in soak test, regardless of the status of the system, until the soak test timer has expired. If the system is armed when the timer expires, the zones are removed from soak test when the system is disarmed.

No communications occur for events from a zone in soak test, with the exception of low battery and low battery restore events and faults generated by low sensitivity in a smoke detector.

A message indicating that the zone is in soak test is displayed when scrolling left or right in the base disarmed keypad menu.

ⓘ **Note:** Soak test is not applied to temperature detector events if it is enabled.

[982] Battery Settings

[000] – Panel Battery Settings

01 – When disabled, the panel battery is charged at 400mA. When enabled, the battery is charged at 700mA.

[010] – High Current Output Battery

Enables and disables the high-current battery charge option for HSM2204 1-4.

[020] – 1A Power Supply Battery

Enables and disables the high-current battery charge option for HSM2300 1-4.

Defaults

[989] Default Master Code

This section is used to default the master code to the factory default. After entering this section, key in the installer code then 989. [989][installer code][989] or [*].

Note: UL Feature is only available for models of NEO.

[990] Installer Lockout Enable/Disable

When this option is enabled, an installer can not perform a hardware default; attempts to do so are logged to the event buffer.

An audible indication of installer lockout is provided when powering up the alarm system (the phone line relay clicks rapidly). Software default changes can still be made while installer lockout is enabled.

[990][installer code][990] or [*].

[991] Default Keypads

This programming option is used to return system keypads to factory default settings.

[901]- [916] – Default Keypads 1-16

This section resets individual keypads to factory defaults. After entering this section, select the keypad to default, key in the installer code then 991 (or press [*]).

[999] – Default All Keypads

This section resets all system keypads to factory defaults. After entering this section, key in the installer code then (*) or 991.

[993] Default Alternate Communicator

This section resets the alternate communicator to factory defaults. Enter [993][installer code][993 or *].

[996] Default Wireless Receiver

This section resets the wireless receiver (HSM2HOSTx) to factory defaults. Enter [996][installer code][996 or *].

[998] Default HSM2955

This section resets the audio module (HSM2955) to factory defaults. Enter [998][installer code][998 or *].

[999] Default System

This section resets the alarm controller to factory defaults. Enter [999][installer code][999 or *].

Programming

Programming Worksheets

ⓘ **Note:** EN listed options are required for EN 50131 Compliant Installations.

Label Programming

[000] Label Programming **Description on [000] Language Selection**						
[000] – Language Selection (2-digit decimal; Default: 01)						
	01 – English	06 – Dutch	11 – Swedish	16 – Turkish	22 – Bulgarian	27 – Serbian
	02 – Spanish	07 – Polish	12 – Norwegian	18 – Croatian	23 – Latvian	28 – Estonian
	03 – Portuguese	08 – Czech	13 – Danish	19 – Hungarian	24 – Lithuanian	29 – Slovenian
	04 – French	09 – Finish	14 – Hebrew	20 – Romanian	25 – Ukrainian	
	05 – Italian	10 – German	15 – Greek	21 – Russian	26 – Slovakian	

[000] [001] Zone Labels (2 x 14 Characters) Description on [001]-[128] Zone Labels			
	001:	002:	003:
	004:	005:	006:
	007:	008:	009:
	010:	011:	012:
	013:	014:	015:
	016:	017:	018:
	019:	020:	021:
	022:	023:	024:
	025:	026:	027:
	028:	029:	030:
	031	032:	033:
	034:	035:	036:
	037:	038:	039:
	040:	041:	042:
	043:	044:	045:
	046:	047:	048:
	049:	050:	051:
	052:	053:	054:
	055:	056:	057:
	058:	059:	060:
	061:	062:	063:
	064:	065:	066:
	067:	068:	069:
	070:	071:	072:
	073:	074:	075:
	076:	077:	078:
	079:	080:	081:

	082:	083:	084:
	085:	086:	087:
	088:	089:	090:
	091:	092:	093:
	094:	095:	096:
	097:	098:	099:
	100:	101:	102:
	103:	104:	105:
	106:	107:	108:
	109:	110:	111:
	112:	113:	114:
	115:	116:	117:
	118:	119:	120:
	121:	122:	123:
	124:	125:	126:
	127:	128:	

[000]	051 – Zone Tamper Label	(1 x 14 Characters):
	052 – Zone Fault Label	(1 x 14 Characters):
	064 – CO Alarm Message	(2 x 14 Characters):
	065 – Fire Alarm Message	(2 x 14 Characters):
	066 – Fail to Arm Event Message	(2 x 16 Characters):
	067 – Alarm When Armed Event Message	(2 x 16 Characters):
	100 – System Label	(1 x 14 Characters):
	101 – Partition 1 Label	(1 x 14 Characters):
	102 – Partition 2 Label	(1 x 14 Characters):
	103 – Partition 3 Label	(1 x 14 Characters):
	104 – Partition 4 Label	(1 x 14 Characters):
	105 – Partition 5 Label	(1 x 14 Characters):
	106 – Partition 6 Label	(1 x 14 Characters):
	107 – Partition 7 Label	(1 x 14 Characters):
	108 – Partition 8 Label	(1 x 14 Characters):
	201 – Partition 1 Command Output Labels	001 – Partition 1 Command Output 1:
	(2 X 14 ASCII)	002 – Partition 1 Command Output 2:
	Descriptions on [201]-[208][001]-[004] Partition Command Output Labels	003 – Partition 1 Command Output 3:
		004 – Partition 1 Command Output 4:
	202 – Partition 2 Command Output Labels	001 – Partition 2 Command Output 1:
	(2 X 14 ASCII)	002 – Partition 2 Command Output 2:
		003 – Partition 2 Command Output 3:
		004 – Partition 2 Command Output 4:
	203 – Partition 3 Command Output Labels	001 – Partition 3 Command Output 1:
	(2 X 14 ASCII)	002 – Partition 3 Command Output 2:

		003 – Partition 3 Command Output 3:
		004 – Partition 3 Command Output 4:
	204 – Partition 4 Command Output Labels	001 – Partition 4 Command Output 1:
	(2 X 14 ASCII)	002 – Partition 4 Command Output 2:
		003 – Partition 4 Command Output 3:
		004 – Partition 4 Command Output 4:
	205 – Partition 5 Command Output Labels	001 – Partition 5 Command Output 1:
	(2 X 14 ASCII)	002 – Partition 5 Command Output 2:
		003 – Partition 5 Command Output 3:
		004 – Partition 5 Command Output 4:
	206 – Partition 6 Command Output Labels	001 – Partition 6 Command Output 1:
	(2 X 14 ASCII)	002 – Partition 6 Command Output 2:
		003 – Partition 6 Command Output 3:
		004 – Partition 6 Command Output 4:
	207 – Partition 7 Command Output Labels	001 – Partition 7 Command Output 1:
	(2 X 14 ASCII)	002 – Partition 7 Command Output 2:
		003 – Partition 7 Command Output 3:
		004 – Partition 7 Command Output 4:
	208 – Partition 8 Command Output Labels	001 – Partition 8 Command Output 1:
	(2 X 14 ASCII)	002 – Partition 8 Command Output 2:
		003 – Partition 8 Command Output 3:
		004 – Partition 8 Command Output 4:
	601 – Schedule 1 Label	(1 X 16 ASCII): Descriptions on [601]-[604] Schedule Labels
	602 – Schedule 2 Label	(1 X 16 ASCII):
	603 – Schedule 3 Label	(1 X 16 ASCII):
	604 – Schedule 4 Label	(1 X 16 ASCII):

[000]	801 – Keypad Labels (1 X 14 ASCII) Description on [801] Keypad Labels		
		001 – Keypad 1 Label:	009 – Keypad 9 Label:
		002 – Keypad 2 Label:	010 – Keypad 10 Label:
		003 – Keypad 3 Label:	011 – Keypad 11 Label:
		004 – Keypad 4 Label:	012 – Keypad 12 Label:
		005 – Keypad 5 Label:	013 – Keypad 13 Label:
		006 – Keypad 6 Label:	014 – Keypad 14 Label:
		007 – Keypad 7 Label:	015 – Keypad 15 Label:
		008 – Keypad 8 Label:	016 – Keypad 16 Label:
	802 – HSM2108 Zone Expander Label Description on [803][001]-[016] HSM2208 Output Expander Label		
		001– Zone Expander 1 Label:	009– Zone Expander 9 Label:
		002– Zone Expander 2 Label:	010– Zone Expander 10 Label:

		003– Zone Expander 3 Label:	011– Zone Expander 11 Label:
		004– Zone Expander 4 Label:	012– Zone Expander 12 Label:
		005– Zone Expander 5 Label:	013– Zone Expander 13 Label:
		006– Zone Expander 6 Label:	014– Zone Expander 14 Label:
		007– Zone Expander 7 Label:	015– Zone Expander 15 Label:
		008– Zone Expander 8 Label:	
	803 – HSM2208 Output Expander Label (1 X 14 ASCII) Description on [803][001]-[016] HSM2208 Output Expander Label		
		001– Output Expander 1 Label:	009– Output Expander 9 Label:
		002– Output Expander 2 Label:	010– Output Expander 10 Label:
		003– Output Expander 3 Label:	011– Output Expander 11 Label:
		004– Output Expander 4 Label:	012– Output Expander 12 Label:
		005– Output Expander 5 Label:	013– Output Expander 13 Label:
		006– Output Expander 6 Label:	014– Output Expander 14 Label:
		007– Output Expander 7 Label:	015– Output Expander 15 Label:
		008– Output Expander 8 Label:	016– Output Expander 16 Label:

[000] 806 – HSM2HOSTx Label: (1 X 14 ASCII) Description on [806] HSM2HOSTx Label		
[000]	808 - HSM2955 Audio Module Label:	
[000]	809 – HSM2300 Power Supply Label	001 – Power Supply 1 Label:
	(1 X 14 ASCII)	002 – Power Supply 2 Label:
		003 – Power Supply 3 Label:
		004 – Power Supply 4 Label:
[000] 810 – HSM2204 High-Current Output Supply Label		001 – High-Current Output Supply 1 Label:
	(1 X 14 ASCII)	002 – High-Current Output Supply 2 Label:
	Description on [810][001]-[004] HS2204 High-Current Output Supply Label	003 – High-Current Output Supply 3 Label:
		004 – High-Current Output Supply 4 Label:
[000] 815 – Alt. Comm Label: (1 X 14 ASCII) Description on [815] Alternate Communicator Label		

[000]	820 – Siren Labels		
		001– Siren 1 Label:	009– Siren 9 Label:
		002– Siren 2 Label:	010– Siren 10 Label:
		003– Siren 3 Label:	011– Siren 11 Label:
		004– Siren 4 Label:	012– Siren 12 Label:
		005– Siren 5 Label:	013– Siren 13 Label:

		006– Siren 6 Label:	014– Siren 14 Label:
		007– Siren 7 Label:	015– Siren 15 Label:
		008– Siren 8 Label:	016– Siren 16 Label:

[000]	821 – Repeater Label	001– Repeater 1 Label:
	(1 X 14 ASCII):	002– Repeater 2 Label:
	Description on [821][001]-[008] Repeater Labels	003– Repeater 3 Label:
		004– Repeater 4 Label:
		005– Repeater 5 Label:
		006– Repeater 6 Label:
		007– Repeater 7 Label:
		008– Repeater 8 Label:

[000] 999 – Default Labels Description on [999][Installer Code][999] Default Labels

Zone Setup

[001] [001 - 128] Zone Type			
	Available Zone Types Default = 000 Description on [001] AssignZone Types * Not UL evaluated		
	000 – Null Zone 001 – Delay 1 002 – Delay 2 003 – Instant 004 – Interior 005 – Interior Stay/Away 006 – Delay Stay/Away 007 – Delayed 24-Hour Fire 008 – Standard 24-Hour Fire 009 – Instant Stay/Away 010 – Interior Delay 011 – Day Zone 012 – Night Zone 016 – Final Door Set 017 – 24-Hour Burglary	018 – 24-Hour Bell/Buzzer 023 – 24-Hour Supervisory 024 – 24-Hour Supervisory Buzzer 025 – Auto Verified Fire 027 – Fire Supervisory 040 – 24-Hour Gas 041 – 24-Hour CO 042 – 24-Hour Holdup* 043 – 24-Hour Panic 045 – 24-Hour Heat 046 – 24-Hour Medical 047 – 24-Hour Emergency 048 – 24-Hour Sprinkler* 049 – 24-Hour Flood	051 – 24-Hour Latching Tamper 052 – 24-Hour Non-Alarm 056 – 24-Hour High Temperature 057 – 24 Hour Low Temperature 060 – 24-Hour Non-Latching Tamper 066 – Momentary Keyswitch Arm 067 – Maintained Keyswitch Arm 068 – Momentary Keyswitch Disarm 069 – Maintained Keyswitch Disarm 071 – Door Bell 072 – Push to Set

Default Zone Types

Section	Zone	Default	Type	Section	Zone	Default
[001]	001	001		[001]	009	001
	002	001			010	001
	003	006			011	001

	004	006			012	001
	005	006			013	001
	006	001			014	001
	007	001			015	001
	008	001			016	001

Default zone type for zones 017-128: 000

[002] [001 - 128] Zone Attributes															
	Available Zone Attributes See next page for defaults Description on [002] Zone Attributes														
	1 – Bell Audible 2 – Bell Steady 3 – Door Chime 4 – Bypass Enabled			5 – Force Arm 6 – Swinger Shutdown 7 – Transmission Delay 8 – Burglary Verification			9 – Normally Close 10 – Single EOL 11 – Double EOL 12 – Fast/Normal Loop Response			13 – Zone 2-way Audio Activation 14 – Hold Up Verification					
	Record Zone Settings:														
	Zone	Type	Att.	Zone	Type	Att.	Zone	Type	Att.	Zone	Type	Att.	Zone	Type	Att.
	001:			002:			003:			004:			005:		
	006:			007:			008:			009:			010:		
	011:			012:			013:			014:			015:		
	016:			017:			018:			019:			020:		
	021:			022:			023:			024:			025:		
	026:			027:			028:			029:			030:		
	031:			032:			033:			034:			035:		
	036:			037:			038:			039:			040:		
	041:			042:			043:			044:			045:		
	046:			047:			048:			049:			050:		
	051:			052:			053:			054:			055:		
	056:			057:			058:			059:			060:		
	061:			062:			063:			064:			065:		
	066:			067:			068:			069:			070:		
	071:			072:			073:			074:			075:		
	076:			077:			078:			079:			080:		
	081:			082:			083:			084:			085:		
	086:			087:			088:			089:			090:		
	091:			092:			093:			094:			095:		
	096:			097:			098:			099:			100:		
	101:			102:			103:			104:			105:		
	106:			107:			108:			109:			110:		
	111:			112:			113:			114:			115:		
	116:			117:			118:			119:			120:		
	121:			122:			123:			124:			125:		
	126:			127:			128:								

Zone Attribute Defaults

Zone Attributes															
1 – Bell Audible 2 – Bell Steady 3 – Chime Function 4 – Bypass Enabled		5 –Force Arm 6 – Swinger Shutdown 7 – Transmission Delay 8 - Burglary Verification					9 – Normally Closed EOL 10 – Single EOL 11 – Double EOL 12 – Fast/Normal Loop Response					13 - Zone 2-way Audio Activation 14 - Hold Up Verification			
Zone Type		1	2	3	4	5	6	7	8	9	10	11	12	13	14
000	Null Zone														
001	Delay 1	x	x	x	x		x	CP-01 x	x						
002	Delay 2	x	x	x	x		x	CP-01 x	x						
003	Instant	x	x	x	x		x	CP-01 x	x						
004	Interior	x	x		x		x	CP-01 x	x						
005	Interior Stay/ Away	x	x		x	x	x	CP-01 x	x						
006	Delay Stay/ Away	x	x		x	x	x	CP-01 x	x						
007	Delayed 24-Hour Fire	x													
008	Standard 24-Hour Fire	x													
009	Instant Stay/ Away	x	x		x		x	CP-01 x	x						
010	Interior Delay	x	x		x		x	CP-01 x	x						
011	Day Zone	x	x		x	x	x	x	x						
012	Night Zone	x	x		x	x	x	x	x						
016	Final Door Set	x	x	x	x		CP-01 x	CP-01 x	x						
017	24-Hour Burglary	x	x		x		CP-01 x	CP-01 x	x						
018	24-Hour Bell/ Buzzer	x	x		x		CP-01 x	CP-01 x	x						

023	24-Hour Supervisory		x			x	CP-01 x	x**x**							
024	24-Hour Supervisory Buzzer		x		x		CP-01 x	CP-01 x							
025	Auto Verify Fire	x													
027	Fire Supervisory														
040	24-Hour Gas	x					CP-01 x	CP-01 x							
041	24-Hour CO	x													
042	24-Hour Holdup		x			**x**	CP-01 x	CP-01 x							x
043	24-Hour Panic	x	x				CP-01 x	CP-01 x							
045	24-Hour Heat	x					CP-01 x								
046	24-Hour Medical	x	x				CP-01 x	CP-01 x							
047	24-Hour Emergency	x	x				CP-01 x	CP-01 x							
048	24-Hour Sprinkler	x	x				CP-01 x	CP-01 x							
049	24-Hour Flood	x	x				CP-01 x	CP-01 x							
051	24-Hour Latching Tamper	x	x				CP-01 x	CP-01 x							
052	24-Hour Non-Alarm					x									

056	24 Hour High Temperature	x	x		x		CP-01 x	CP-01 x							
057	24 Hour Low Temperature	x	x		x		CP-01 x	CP-01 x							
060	24-Hr Non-Latching Tamper	x	x				CP-01 x	CP-01 x							
066	Momentary Keyswitch Arm					x									
067	Maintained Keyswitch Arm					x									
068	Momentary Keyswitch Disarm					x									
069	Maintained Keyswitch Disarm					x									
071	Door Bell			x		x									
072	Push to Set					x									

System Times

[005] System Times		
	000 – System Area	Bell Cutoff (Default: 004 minutes):
	(3-Digit Decimal)	Bell Delay Time (Default: 000 minutes):
		Burglary Verification Timer (Default: 060 minutes):
		Holdup Verification Timer (Default: 008 hours):
		Zone Loop Response Time (Default: 025 x 10ms):
		Automatic Clock Adjust (Default: 060 seconds):
	001 – Partition 1 Timer	Entry Delay 1 (Default:030 030 045):

		Entry Delay 2 (060Default: 045 Default: 030 CP-01):
		Exit Delay (Default: 120 CP-01 Default: 060):
		Settle Delay (Default: 010> CP-01 Default: 000):
	002 – Partition 2 Timer	Entry Delay 1:
	See partition 1 for defaults	Entry Delay 2:
		Exit Delay:
		Settle Delay:
	003 – Partition 3 Timer	Entry Delay 1:
	See partition 1 for defaults	Entry Delay 2:
		Exit Delay:
		Settle Delay:
	004 – Partition 4 Timer	Entry Delay 1:
	See partition 1 for defaults	Entry Delay 2:
		Exit Delay:
		Settle Delay:
	005 – Partition 5 Timer	Entry Delay 1:
	See partition 1 for defaults	Entry Delay 2:
		Exit Delay:
		Settle Delay:
	006 – Partition 6 Timer	Entry Delay 1:
	See partition 1 for defaults	Entry Delay 2:
		Exit Delay:
		Settle Delay:
	007 – Partition 7 Timer	Entry Delay 1:
	See partition 1 for defaults	Entry Delay 2:
		Exit Delay:
		Settle Delay:
	008 – Partition 8 Timer	Entry Delay 1:
	See partition 1 for defaults	Entry Delay 2:
		Exit Delay:
		Settle Delay
	900 - Bell Delay Partition Mask Default: All partitions are ON	1 2 3 4 5 6 7 8 Y Y Y Y Y Y Y
	901 – Daylight Savings Begin	Month (Default : 003(AUS 010 NZ 009 SA FRA 004):
		Week (Default : NA 002 EN AUS NZ CE C UK 005 SA FRA 001):
		Day (Default : 000):
		Hour (Default : NA 002 EN 001):

		Increment (Default : 001):
	902 – Daylight Savings End	Month (Default : NA 011 EN 010):
		Week (Default : NA 001 EN 005):
		Day (Default : 000):
		Hour (Default : NA 002 EN 001):
		Increment (Default : 001):

Access Codes

[006] Installer-Defined Codes		
(4/6/8-Digit Decimal)	001 – Installer Code	(Default:55555555)
(4/6/8-Digit Decimal)	002 – Master Code	(Default:12345678)
(4/6/8-Digit Decimal)	003 – Maintenance Code	(Default: AAAAAAAA)
(000-255)	005 – Code Version	(Default:000)

PGM Programming

[007] [000 - 164] PGM Programming		
	[000] – Main Bell Partition Assignment	1 2 3 4 5 6 7 8 Y N N N N N N N
	[001 – 164] PGM Partition Assignment Default: Partition 1 on. All others off Description on [001]-[164] PGM 001-164 Attributes	1 2 3 4 5 6 7 8 Y N N N N N N N

[008] [000 - 164] PGM Timer Programming				
	[000] – PGM Timers Minutes or Seconds:		o Minutes o Seconds	
	[001 – 164]: PGM 1 to 164 (3-Digit Decimal) Valid Range: 001-255 Default: 005 Description on [008] PGM Timer Programming			
	001 – PGM 1:	002 – PGM 2:	003 – PGM 3:	004 – PGM 4:
	005 – PGM 5:	006 – PGM 6:	007 – PGM 7:	008 – PGM 8:
	009 – PGM 9:	010 – PGM 10:	011 – PGM 11:	012 – PGM 12:
	013 – PGM 13:	014 – PGM 14:	015 – PGM 15:	016 – PGM 16:
	017 – PGM 17:	018 – PGM 18:	019 – PGM 19:	020 – PGM 20:
	021 – PGM 21:	022 – PGM 22:	023 – PGM 23:	024 – PGM 24:
	025 – PGM 25:	026 – PGM 26:	027 – PGM 27:	028 – PGM 28:
	029 – PGM 29:	030 – PGM 30:	031 – PGM 31:	032 – PGM 32:
	033 – PGM 33:	034 – PGM 34:	035 – PGM 35:	036 – PGM 36:
	037 – PGM 37:	038 – PGM 38:	039 – PGM 39:	040 – PGM 40:
	041 – PGM 41:	042 – PGM 42:	043 – PGM 43:	044 – PGM 44:
	045 – PGM 45:	046 – PGM 46:	047 – PGM 47:	048 – PGM 48:
	049 – PGM 49:	050 – PGM 50:	051 – PGM 51:	052 – PGM 52:
	053 – PGM 53:	054 – PGM 54:	055 – PGM 55:	056 – PGM 56:

[008] [000 - 164] PGM Timer Programming				
	057 – PGM 57:	058 – PGM 58:	059 – PGM 59:	060 – PGM 60:
	061 – PGM 61:	062 – PGM 62:	063 – PGM 63:	064 – PGM 64:
	065 – PGM 65:	066 – PGM 66:	067 – PGM 67:	068 – PGM 68:
	069 – PGM 69:	070 – PGM 70:	071 – PGM 71:	072 – PGM 72:
	073 – PGM 73:	074 – PGM 74:	075 – PGM 75:	076 – PGM 76:
	077 – PGM 77:	078 – PGM 78:	079 – PGM 79:	080 – PGM 80:
	081 – PGM 81:	082 – PGM 82:	083 – PGM 83:	084 – PGM 84:
	085 – PGM 85:	086 – PGM 86:	087 – PGM 87:	088 – PGM 88:
	089 – PGM 89:	090 – PGM 90:	091 – PGM 91:	092 – PGM 92:
	093 – PGM 93:	094 – PGM 94:	095 – PGM 95:	096 – PGM 96:
	097 – PGM 97:	098 – PGM 98:	099 – PGM 99:	100 – PGM 100:
	101 – PGM 101:	102 – PGM 102:	103 – PGM 103:	104 – PGM 104:
	105 – PGM 105:	106 – PGM 106:	107 – PGM 107:	108 – PGM 108:
	109 – PGM 109:	110 – PGM 110:	111 – PGM 111:	112 – PGM 112:
	113 – PGM 113:	114 – PGM 114:	115 – PGM 115:	116 – PGM 116:
	117 – PGM 117:	118 – PGM 118:	119 – PGM 119:	120 – PGM 120:
	121 – PGM 121:	122 – PGM 122:	123 – PGM 123:	124 – PGM 124:
	125 – PGM 125:	126 – PGM 126:	127 – PGM 127:	128 – PGM 128:
	129 – PGM 129:	130 – PGM 130:	131 – PGM 131:	132 – PGM 132:
	133 – PGM 133:	134 – PGM 134:	135 – PGM 135:	136 – PGM 136:
	137 – PGM 137:	138 – PGM 138:	139 – PGM 139:	140 – PGM 140:
	141 – PGM 141:	142 – PGM 142:	143 – PGM 143:	144 – PGM 144:
	145 – PGM 145:	146 – PGM 146:	147 – PGM 147:	148 – PGM 148:
	149 – PGM 149:	150 – PGM 150:	151 – PGM 151:	152 – PGM 152:
	153 – PGM 153:	154 – PGM 154:	155 – PGM 155:	156 – PGM 156:
	157 – PGM 157:	158 – PGM 158:	159 – PGM 159:	160 – PGM 160:
	161 – PGM 161:	162 – PGM 162:	163 – PGM 163:	164 – PGM 164:

[009] [001] - [164] PGM Types				
	100 – Null PGM	122 – Command Output 2	157 – System Tamper	207 – Follower-Zones 49-56
	101 – Burg and Fire Bell Follower	123 – Command Output 3	161 – DC Trouble	208 – Follower-Zones 57-64
	102 – Delayed Fire/ Burg	124 – Command Output 4	165 – Prox Used 166 – Partition Prox Used	209 – Follower-Zones 65-72
	103 – Sensor Reset[*][7][2]	129 – Partition Status Alarm Memory	175 – Bell Status and Programming Access Output	210 – Follower-Zones 73-80
	104 – 2-Wire Smoke	132 – Holdup Output	176 – Remote Operation	211 – Follower-Zones 81-88
	109 – Courtesy Pulse	134 – 24Hr Silent	184 – Open After Alarm	212 – Follower-Zones 89-96
	111 – Keypad Buzzer Follow	135 – 24Hr Audible Input	200 – Zone Follower	213 – Follower-Zones 97-104
	114 – Ready To Arm	146 – TLM and Alarm	201 – Follower-Zones 1-8	214 – Follower-Zones 105-112

[009] [001] - [164] PGM Types				
	115 – System Armed Status	147 – Kissoff	202 – Follower-Zones 9-16	215 – Follower-Zones 113-120
	116 – Away Armed Status	148 – Ground Start	203 – Follower-Zones 17-24	216 – Follower-Zones 120-128
	117 – Stay Armed Status	149 – Alt. Communicator	204 – Follower-Zones 25-32	
	120 – Away Armed/no Bypass Status	155 – System Trouble	205 – Follower-Zones 33-40	
	121 – Command Output 1	156 – Latched System Event	206 – Follower-Zones 41-48	
	(3-Digit Decimal) Valid Range: 001-216 001 Default: 121 Command Output 1 002 Default: 156 System Event 003 - 164 Default: 101 Burg and Fire Bell Follower Description on [009] PGM Types			
	001 – PGM 1:	002 – PGM 2:	003 – PGM 3:	004 – PGM 4:
	005 – PGM 5:	006 – PGM 6:	007 – PGM 7:	008 – PGM 8:
	009 – PGM 9:	010 – PGM 10:	011 – PGM 11:	012 – PGM 12:
	013 – PGM 13:	014 – PGM 14:	015 – PGM 15:	016 – PGM 16:
	017 – PGM 17:	018 – PGM 18:	019 – PGM 19:	020 – PGM 20:
	021 – PGM 21:	022 – PGM 22:	023 – PGM 23:	024 – PGM 24:
	025 – PGM 25:	026 – PGM 26:	027 – PGM 27:	028 – PGM 28:
	029 – PGM 29:	030 – PGM 30:	031 – PGM 31:	032 – PGM 32:
	033 – PGM 33:	034 – PGM 34:	035 – PGM 35:	036 – PGM 36:
	037 – PGM 37:	038 – PGM 38:	039 – PGM 39:	040 – PGM 40:
	041 – PGM 41:	042 – PGM 42:	043 – PGM 43:	044 – PGM 44:
	045 – PGM 45:	046 – PGM 46:	047 – PGM 47:	048 – PGM 48:
	049 – PGM 49:	050 – PGM 50:	051 – PGM 51:	052 – PGM 52:
	053 – PGM 53:	054 – PGM 54:	055 – PGM 55:	056 – PGM 56:
	057 – PGM 57:	058 – PGM 58:	059 – PGM 59:	060 – PGM 60:
	061 – PGM 61:	062 – PGM 62:	063 – PGM 63:	064 – PGM 64:
	065 – PGM 65:	066 – PGM 66:	067 – PGM 67:	068 – PGM 68:
	069 – PGM 69:	070 – PGM 70:	071 – PGM 71:	072 – PGM 72:
	073 – PGM 73:	074 – PGM 74:	075 – PGM 75:	076 – PGM 76:
	077 – PGM 77:	078 – PGM 78:	079 – PGM 79:	080 – PGM 80:
	081 – PGM 81:	082 – PGM 82:	083 – PGM 83:	084 – PGM 84:
	085 – PGM 85:	086 – PGM 86:	087 – PGM 87:	088 – PGM 88:
	089 – PGM 89:	090 – PGM 90:	091 – PGM 91:	092 – PGM 92:
	093 – PGM 93:	094 – PGM 94:	095 – PGM 95:	096 – PGM 96:
	097 – PGM 97:	098 – PGM 98:	099 – PGM 99:	100 – PGM 100:
	101 – PGM 101:	102 – PGM 102:	103 – PGM 103:	104 – PGM 104:
	105 – PGM 105:	106 – PGM 106:	107 – PGM 107:	108 – PGM 108:
	109 – PGM 109:	110 – PGM 110:	111 – PGM 111:	112 – PGM 112:
	113 – PGM 113:	114 – PGM 114:	115 – PGM 115:	116 – PGM 116:
	117 – PGM 117:	118 – PGM 118:	119 – PGM 119:	120 – PGM 120:

[009] [001] - [164] PGM Types				
	121 – PGM 121:	122 – PGM 122:	123 – PGM 123:	124 – PGM 124:
	125 – PGM 125:	126 – PGM 126:	127 – PGM 127:	128 – PGM 128:
	129 – PGM 129:	130 – PGM 130:	131 – PGM 131:	132 – PGM 132:
	133 – PGM 133:	134 – PGM 134:	135 – PGM 135:	136 – PGM 136:
	137 – PGM 137:	138 – PGM 138:	139 – PGM 139:	140 – PGM 140:
	141 – PGM 141:	142 – PGM 142:	143 – PGM 143:	144 – PGM 144:
	145 – PGM 145:	146 – PGM 146:	147 – PGM 147:	148 – PGM 148:
	149 – PGM 149:	150 – PGM 150:	151 – PGM 151:	152 – PGM 152:
	153 – PGM 153:	154 – PGM 154:	155 – PGM 155:	156 – PGM 156:
	157 – PGM 157:	158 – PGM 158:	159 – PGM 159:	160 – PGM 160:
	161 – PGM 161:	162 – PGM 162:	163 – PGM 163:	164 – PGM 164:

[010] [000 - 164] PGM Attributes				
	[000] – Main Bell Mask Description on [010] PGM Attributes	☑ 01 – Fire Alarm ☑ 02 – CO Alarm ☑ 03 – Burglary Alarm ☑ 04 – Flood Alarm ☑ 05 – Bell Squawks		
	001-164 PGM Attributes			
	PGM 1-164:	100 – Null PGM		
		101 – Fire and Burglary	☑ 01 – True Output	
		102 – Delay Fire and Burg	☑ 01 – True Output	
		103 – Sensor Reset [*][7][2]	☐ 03 – Code Required	
		109 – Courtesy Pulse	☑ 01 – True Output	
		111 – Keypad Buzzer Follow	☑ 01 – True Output ☐ 02 – Timed Output ☑ 09 – Entry Delay ☑ 10 – Exit Delay ☑ 11 – Door Chime ☑ 12 – Keypad Buzzer Zone ☑ 13 – Audible Exit Zone ☑ 14 – Auto-Arm Pre-Alert	
		114 – Ready To Arm	☑ 01 – True Output	
		115 – Armed Status	☑ 01 – True Output	
		116 – Armed Away Mode	☑ 01 – True Output	
		117 – Armed Stay Mode	☑ 01 – True Output	
		120 – Away Armed No Bypass	☑ 01 – True Output	
		121 – Command Output 1	☑ 01 – True Output ☐ 02 – Timed Output ☑ 03 – Code Required	☑ Schedule 001

[010] [000 - 164] PGM Attributes				
		122 – Command Output 2	☑ 01 – True Output ☐ 02 – Timed Output ☐ 03 – Code Required	☑ Schedule 001
		123 – Command Output 3	☑ 01 – True Output ☐ 02 – Timed Output ☐ 03 – Code Required	☑ Schedule 001
		124 – Command Output 4	☑ 01 – True Output ☐ 02 – Timed Output ☐ 03 – Code Required	☑ Schedule 001
		129 – Partition Status Alarm Memory	☑ 01 – True Output	
		132 – Holdup Output	☑ 01 – True Output ☐ 02 – Timed Output	
		133 - Burglary Verified	☑ 01 – True Output	
		146 – TLM And Alarm	☑ 01 – True Output	
		147 – Kissoff Output	☑ 01 – True Output	
		148 – Ground Start	☑ 01 – True Output	
		149 – Alternate Communicator	☑ 01 – True Output ☑ 02 – Timed Output ☐ 04 – Fire Alarm ☐ 05 – Panic Alarm ☐ 06 – Burglary Alarm ☐ 07 – Open/Close ☐ 08 – Zone Auto Bypass ☐ 09 – Medical Alarm ☐ 10 – Burglary Verified ☐ 11 – Open After Alarm ☐ 12 – Emergency Alarm ☐ 13 – Duress Alarm ☐ 14 – Holdup Verified	
		155 – System Trouble	☑ 01 – True Output ☐ 02 – Timed Output ☑ 04 – Service Required ☑ 05 – Loss of Clock ☑ 06 – DC Trouble ☑ 07 – Bus Voltage ☑ 08 – AC Trouble ☑ 09 – Device Fault ☑ 10 – Device Battery ☑ 11 – Device Tamper ☑ 12 – RF Delinquency ☑ 13 – Module Supervisory ☑ 14 – Module Tamper ☑ 15 – Communications ☑ 16 – Not Networked	

[010] [000 - 164] PGM Attributes				
		156 – Latched System Event	☑ 01 – True Output ☐ 02 – Timed Output ☑ 04 – Fire Alarm ☑☑ 05 – Panic Alarm ☑ 06 – Burglary Alarm ☑ 07 – Medical Alarm ☑ 08 – Supervisory ☑ 09 – Priority Event ☑☑ 10 – Holdup ☑ 11 – Duress Alarm ☑ 12 – Emergency Alarm ☑ 13 – Fire Supervisory ☑ 14 – Fire Trouble ☑ 15 – CO Alarm	
		157 – System Tamper	☑ 01 – True Output ☐ 02 – Timed Output ☑ 09 – Module Tamper ☑ 10 – Zone Tampers	
		161 – DC Trouble	☑ 01 – True Output ☐ 02 – Timed Output ☑ 09 – Battery Low ☑ 10 – Battery Absent	
		165 – Prox Used	☑ 01 – True Output	
		166 – Prox Used Part	☑ 01 – True Output ☐ 02 – Timed Output	
		175 – Bell Prog Access	☑ 01 – True Output	
		176 – Remote Operation	☑ 01 – True Output ☐ 02 – Timed Output	

[010] [000 - 164] PGM Attributes				
		184 – Open After Alarm	☑ 01 – True Output ☑02 – Timed Output	
		200 – Zone Follow by Zone	☑ 01 – True Output o 02 – Timed Output ☑ 04 – Latching ☐ 05 – Follow Alarm	
		201 Zone Follower Zones 1-8 202 Zone Follower Zones 9-16 203 Zone Follower Zones 17-24 204 Zone Follower Zones 25-32 205 Zone Follower Zones 33-40 206 Zone Follower Zones 41-48 207 Zone Follower Zones 49-56 208 Zone Follower Zones 57-64 209 Zone Follower Zones 65-72 210 Zone Follower Zones 73-80 211 Zone Follower Zones 81-88 212 Zone Follower Zones 89-96 213 Zone Follower Zones 97-104 214 Zone Follower Zones 105-112 215 Zone Follower Zones 113-120 216 Zone Follower Zones 121-128	☑ 01 – True Output ☐ 02 – Timed Output ☑ o 04 – Latching ☐ 05 – Follow Alarm ☑ 09 – Zone Terminal 1 ☑ 10 – Zone Terminal 2 ☑ 11 – Zone Terminal 3 ☑ 12 – Zone Terminal 4 ☑ 13 – Zone Terminal 5 ☑ 14 – Zone Terminal 6 ☑ 15 – Zone Terminal 7 ☑ 16 – Zone Terminal 8	

[010] PGM Attribute Assignment:				
	(16-Bit Toggles) Description on [010] PGM Attributes			
	001 – PGM 1:	002 – PGM 2:	003 – PGM 3:	004 – PGM 4:
	005 – PGM 5:	006 – PGM 6:	007 – PGM 7:	008 – PGM 8:
	009 – PGM 9:	010 – PGM 10:	011 – PGM 11:	012 – PGM 12:
	013 – PGM 13:	014 – PGM 14:	015 – PGM 15:	016 – PGM 16:
	017 – PGM 17:	018 – PGM 18:	019 – PGM 19:	020 – PGM 20:
	021 – PGM 21:	022 – PGM 22:	023 – PGM 23:	024 – PGM 24:
	025 – PGM 25:	026 – PGM 26:	027 – PGM 27:	028 – PGM 28:
	029 – PGM 29:	030 – PGM 30:	031 – PGM 31:	032 – PGM 32:
	033 – PGM 33:	034 – PGM 34:	035 – PGM 35:	036 – PGM 36:

[010] PGM Attribute Assignment:				
	037 – PGM 37:	038 – PGM 38:	039 – PGM 39:	040 – PGM 40:
	041 – PGM 41:	042 – PGM 42:	043 – PGM 43:	044 – PGM 44:
	045 – PGM 45:	046 – PGM 46:	047 – PGM 47:	048 – PGM 48:
	049 – PGM 49:	050 – PGM 50:	051 – PGM 51:	052 – PGM 52:
	053 – PGM 53:	054 – PGM 54:	055 – PGM 55:	056 – PGM 56:
	057 – PGM 57:	058 – PGM 58:	059 – PGM 59:	060 – PGM 60:
	061 – PGM 61:	062 – PGM 62:	063 – PGM 63:	064 – PGM 64:
	065 – PGM 65:	066 – PGM 66:	067 – PGM 67:	068 – PGM 68:
	069 – PGM 69:	070 – PGM 70:	071 – PGM 71:	072 – PGM 72:
	073 – PGM 73:	074 – PGM 74:	075 – PGM 75:	076 – PGM 76:
	077 – PGM 77:	078 – PGM 78:	079 – PGM 79:	080 – PGM 80:
	081 – PGM 81:	082 – PGM 82:	083 – PGM 83:	084 – PGM 84:
	085 – PGM 85:	086 – PGM 86:	087 – PGM 87:	088 – PGM 88:
	089 – PGM 89:	090 – PGM 90:	091 – PGM 91:	092 – PGM 92:
	093 – PGM 93:	094 – PGM 94:	095 – PGM 95:	096 – PGM 96:
	097 – PGM 97:	098 – PGM 98:	099 – PGM 99:	100 – PGM 100:
	101 – PGM 101:	102 – PGM 102:	103 – PGM 103:	104 – PGM 104:
	105 – PGM 105:	106 – PGM 106:	107 – PGM 107:	108 – PGM 108:
	109 – PGM 109:	110 – PGM 110:	111 – PGM 111:	112 – PGM 112:
	113 – PGM 113:	114 – PGM 114:	115 – PGM 115:	116 – PGM 116:
	117 – PGM 117:	118 – PGM 118:	119 – PGM 119:	120 – PGM 120:
	121 – PGM 121:	122 – PGM 122:	123 – PGM 123:	124 – PGM 124:
	125 – PGM 125:	126 – PGM 126:	127 – PGM 127:	128 – PGM 128:
	129 – PGM 129:	130 – PGM 130:	131 – PGM 131:	132 – PGM 132:
	133 – PGM 133:	134 – PGM 134:	135 – PGM 135:	136 – PGM 136:
	137 – PGM 137:	138 – PGM 138:	139 – PGM 139:	140 – PGM 140:
	141 – PGM 141:	142 – PGM 142:	143 – PGM 143:	144 – PGM 144:
	145 – PGM 145:	146 – PGM 146:	147 – PGM 147:	148 – PGM 148:
	149 – PGM 149:	150 – PGM 150:	151 – PGM 151:	152 – PGM 152:
	153 – PGM 153:	154 – PGM 154:	155 – PGM 155:	156 – PGM 156:
	157 – PGM 157:	158 – PGM 158:	159 – PGM 159:	160 – PGM 160:
	161 – PGM 161:	162 – PGM 162:	163 – PGM 163:	164 – PGM 164:

[011] PGM Config. Options Description on [011] PGM Configuration Options					
	PGM		**Zone Follower by Zone (000-128; Default 000)**	**Prox. Used (000-095; Default 000)**	**Schedule (000-004; Default 000)**
Alarm Panel	001	PGM 1			
	002	PGM 2			
	003	PGM 3			
	004	PGM 4			
HSM2204 #1	005	PGM 5			
	006	PGM 6			

[011] PGM Config. Options Description on [011] PGM Configuration Options					
	PGM		Zone Follower by Zone (000-128; Default 000)	Prox. Used (000-095; Default 000)	Schedule (000-004; Default 000)
	007	PGM 7			
	008	PGM 8			
HSM2204 #2	009	PGM 9			
	010	PGM 10			
	011	PGM 11			
	012	PGM 12			
HSM2204 #3	013	PGM 13			
	014	PGM 14			
	015	PGM 15			
	016	PGM 16			
HSM2204 #4	017	PGM 17			
	018	PGM 18			
	019	PGM 19			
	020	PGM 20			
HSM2208 #1	037	PGM 37			
	038	PGM 38			
	039	PGM 39			
	040	PGM 40			
	041	PGM 41			
	042	PGM 42			
	043	PGM 43			
	044	PGM 44			
HSM2208 #2	045	PGM 45			
	046	PGM 46			
	047	PGM 47			
	048	PGM 48			
	049	PGM 49			
	050	PGM 50			
	051	PGM 51			
	052	PGM 52			
HSM2208 #3	053	PGM 53			
	054	PGM 54			
	055	PGM 55			
	056	PGM 56			
	057	PGM 57			
	058	PGM 58			
	059	PGM 59			
	060	PGM 60			

[011] PGM Config. Options Description on [011] PGM Configuration Options					
	PGM		Zone Follower by Zone (000-128; Default 000)	Prox. Used (000-095; Default 000)	Schedule (000-004; Default 000)
HSM2208 #4	061	PGM 61			
	062	PGM 62			
	063	PGM 63			
	064	PGM 64			
	065	PGM 65			
	066	PGM 66			
	067	PGM 67			
	068	PGM 68			
HSM2208 #5	069	PGM 69			
	070	PGM 70			
	071	PGM 71			
	072	PGM 72			
	073	PGM 73			
	074	PGM 74			
	075	PGM 75			
	076	PGM 76			
HSM2208 #6	077	PGM 77			
	078	PGM 78			
	079	PGM 79			
	080	PGM 80			
	081	PGM 81			
	082	PGM 82			
	083	PGM 83			
	084	PGM 84			
HSM2208 #7	085	PGM 85			
	086	PGM 86			
	087	PGM 87			
	088	PGM 88			
	089	PGM 89			
	090	PGM 90			
	091	PGM 91			
	092	PGM 92			
HSM2208 #8	093	PGM 93			
	094	PGM 94			
	095	PGM 95			
	096	PGM 96			
	097	PGM 97			
	098	PGM 98			
	099	PGM 99			
	100	PGM 100			

[011] PGM Config. Options Description on [011] PGM Configuration Options					
	PGM		Zone Follower by Zone (000-128; Default 000)	Prox. Used (000-095; Default 000)	Schedule (000-004; Default 000)
HSM2208 #9	101	PGM 101			
	102	PGM 102			
	103	PGM 103			
	104	PGM 104			
	105	PGM 105			
	106	PGM 106			
	107	PGM 107			
	108	PGM 108			
HSM2208 #10	109	PGM 109			
	110	PGM 110			
	111	PGM 111			
	112	PGM 112			
	113	PGM 113			
	114	PGM 114			
	115	PGM 115			
	116	PGM 116			
HSM2208 #11	117	PGM 117			
	118	PGM 118			
	119	PGM 119			
	120	PGM 120			
	121	PGM 121			
	122	PGM 122			
	123	PGM 123			
	124	PGM 124			
HSM2208 #12	125	PGM 125			
	126	PGM 126			
	127	PGM 127			
	128	PGM 128			
	129	PGM 129			
	130	PGM 130			
	131	PGM 131			
	132	PGM 132			
HSM2208 #13	133	PGM 133			
	134	PGM 134			
	135	PGM 135			
	136	PGM 136			
	137	PGM 137			
	138	PGM 138			
	139	PGM 139			
	140	PGM 140			

[011] PGM Config. Options Description on [011] PGM Configuration Options					
	PGM		**Zone Follower by Zone (000-128; Default 000)**	**Prox. Used (000-095; Default 000)**	**Schedule (000-004; Default 000)**
HSM2208 #14	141	PGM 141			
	142	PGM 142			
	143	PGM 143			
	144	PGM 144			
	145	PGM 145			
	146	PGM 146			
	147	PGM 147			
	148	PGM 148			
HSM2208 #15	149	PGM 149			
	150	PGM 150			
	151	PGM 151			
	152	PGM 152			
	153	PGM 153			
	154	PGM 154			
	155	PGM 155			
	156	PGM 156			
HSM2208 #16	157	PGM 157			
	158	PGM 158			
	159	PGM 159			
	160	PGM 160			
	161	PGM 161			
	162	PGM 162			
	163	PGM 163			
	164	PGM 164			

System Lockout

[012] System Lockout (3-Digit Decimal) Description on [012] System Lockout		
	Keypad Lockout:	(Range: 000-255; Default 003 000 006) **Note:** For EN installations maximum programmed lockout of 10 attempts.
	Keypad Lockout Duration:	(Range: 001-255; Default 001 000 002) **Note:** For EN installations minimum programmed duration of 2 minutes.
	Remote Lockout:	(Range: 003-255; Default 006)
	Remote Lockout Duration:	(Range: 001-255; Default 060)

System Options

[013] System Options 1 Description on [013] System Option 1			
			☐ 1 – NC Loop/EOL
			☐ 2 – DEOL/SEOL
			☑ 2 – DEOL/SEOL
			☑ 3 – Show All Troubles When Armed
			☐ 4 – Tamper/Faults Open Zone
			☑ 5 – Auto-Arm Schedule in [*] [6]
			☑ 6 – Audible Exit Fault
			☑ 7 – Event Buffer Follows Swinger
			☐ 8 – Temporal Three Fire Signaling
[014] System Options 2 Description on [014] System Option 2			
			1 – Bell Squawk
			☐ 2 – Bell Squawk on Auto-Arm
			☐ 3 – Bell Squawk on Exit
			☐ 4 – Bell Squawk on Entry
			☐ 5 – Bell Squawk on Trouble
			☐ 6 – Not Used
			☐ 7 – Exit Delay Termination
			☐ 8 – Fire Bell Continues
[015] System Options 3 Description on [015] System Option 3			
			☑ 1 – [F] Key Enabled
			☐ 2 – [P] Key Annunciation
			☐ 3 – Quick Exit
			☑ 4 – Quick Arming/Function Key
			☐ 5 – Not Used
			☐ 6 – Master Code Not User Changeable
			☑ 7 – Telephone Line Monitor Enable
			☑8 – TLM Audible When Armed
[016] System Options 4 Description on [016] System Option 4			
			☑ 1 – AC Trouble Display
			☐ 2 – AC Trouble Light Flashes
			☑ 2 – AC Trouble Light Flashes
			☐ 3 – Keypad Blanking
			☑ 3 – Keypad Blanking

			☐ 4 – Keypad Blanking Requires Code
			☑ 4 – Keypad Blanking Requires Code
			☑ 5 – Keypad Backlighting
			☐ 6 – Power Save Mode
			☐ 7 – Bypass Display When Armed
			☐ ☑ 8 – Keypad Tampers Enabled
			☑ 8 – Keypad Tampers Enabled
[017] System Options 5 Description on [017] System Option 5			
			☑ 1 – Chime on Opening
			☐ 2 – Chime on Closing
			☑ 2 – Chime on Closing
			☐ 3 – Audible RF Jam Trouble Beeps
			☐ 4 – Multi-Hit
			☐ 5 – Late to Close
			☐ 6 – Daylight Savings Time
			☐ 7 – Silence Chime During Quick Exit Delay
			☐ 8 – Bell Squawk on Away Arm/Disarm
[018] System Options 6 Description on [018] System Option 6			
			☐ 1 – Test Transmission Exception
			☐ 2 – Real-Time Bypass Reporting
			o 3 – Armed Status PGM ON at End of Exit Delay
			☐ 4 – Not Used
			☐ 5 – Keypad Buzzer Alarm
			☐ 6 – Not Used
			☐ 7 – Exit Delay Restart
			☑ 7 – Exit Delay Restart
			☑ 7 – Exit Delay Restart
			☐ 8 – AC Fail Trouble Beeps
			☑ 8 – AC Fail Trouble Beeps
[019] System Options 7 Description on [019] System Option 7			
			☐ 1 – Audible Wireless Zone Fault
			☑ 2 – Latching Troubles
			o 3 – Not Used
			☐ 4 – R-Button
			☐ 5 – Audible Bus Fault

			☐ 6 – Duress Code
			☑ o 7 – Temperature in Celsius
			☐ 8 – Reset After Zone Activation
[020] System Options 8 Description on [020] System Option 8			
			☐ 1 – Access Code Entry During Entry Delay
			☐ 2 – EU Entry Procedure
			☑ 2 – EU Entry Procedure
			☐ 3 – [*][8] Access While Armed
			☐ 4 – Remote Reset
			☐ 5 – Engineer's Reset
			☐ 6 – Keyswitch Disarming During Entry Delay
			☐ 7 – Installer Access and DLS
			☑ 7 – Installer Access and DLS
			☐ 8 – Troubles Inhibits Arming
			☑ 8 – Troubles Inhibits Arming
[021] System Options 9 Description on [021] System Option 9			
			☐ 1 – Trouble Display
			☐ 2 – Keypad Blanking While Armed
			☐ 3 – Auto-Arming Bypass
			☐ 4 – Ready Display
			☐ 5 – PGM Keypad Blanking
			☑ 5 – PGM Keypad Blanking
			☐ 6 – Armed Display
			☐ 7 – Open Cancels Arming
			☑ 7 – Open Cancels Arming
			☐ 8 – Audible Exit Delay for Stay Arm
[022] System Options 10 Description on [022] System Option 10			
			☐ 1 – [F] Key Option
			☐ 2 – Not Used
			☐ 3 – Not Used
			☐ 4 – Test Transmission Counter in Hours
			☐ 5 – Away to Stay Toggle
			☐ 6 – 2 Way Full Duration
			☐ 7 – Trouble Beeps Are Silent
			☐ 8 – Keyswitch Arms in Away Mode

			☑ 8 – Keyswitch Arms in Away Mode
[023] System Options 11 Description on [023] System Option 11			
			☐ 1 – Ready LED Flash for Force Arm
			☐ 2 – Not Used
			☐ 3 – Tamper/Fault Detection
			☐ 4 – Access Code Required for [*][1]
			☑ 4 – Access Code Required for [*][1]
			☐ 5 – Access Code Required for [*][2]
			☑ 5 – Access Code Required for [*][2]
			☐ 6 – Access Code Required for [*][3]
			☑ 6 – Access Code Required for [*][3]
			☐ 7 – Access Code Required for [*][4]
			☑ 7 – Access Code Required for [*][4]
			☑ 7 – Access Code Required for [*][4]
			☐ 8 – [*][6] Accessibility Option
[024] System Options 12 Description on [024] System Option 12			
			☐ 1– 50Hz AC / 60 Hz AC
			☑ 1– 50Hz AC / 60 Hz AC
			☐ 2 – Crystal Timebase
			☑ 2 – Crystal Timebase
			☐ 3 – AC/DC Inhibits Arming
			☑ 3 – AC/DC Inhibits Arming
			☐ 4 – Tampers Inhibit Arming
			☐ 5 – Real Time Clock Option
			☐ 6 – Not Used
			☐ 7 – Brownout Detection Enabled/Disabled
			☐ 8 – DLS Disconnect
[025] System Options 13 Description on [025] System Option 13			
			☐ 1 – European Dial
			☑ 2 – Force Dial
			☐ 3 – Test Transmission Counter in Minutes
			☐ 4 – Not Used
			☐ 5 – ID Tone
			☐ 6 – Tone Generated-2100Hz

			☐ 7 – 1 Hour DLS Window
			☐ 8 – FTC Audible Bell
[040] User Authentication Description on [040] User Authentication			
			☑ 1 – User Code or Prox. Tag
			☐ 2 – User Code and Prox. Tag
[041] Access Code Digits Description on [041] Access Code Digits			
			☑ 00 – 4-Digit Access Codes
			☐ 01 – 6-Digit Access Codes
			☐ 02 – 8-Digit Access Codes
[042] Event Verification Description on [042] Verified Events			
		01 – Burglary Verified Counter (Default: 002):	
		02 – Holdup Counter (Default: 002):	
		03 – Burglary Verification Selection:	001 – Police Code (Default) 002 – Cross Zoning 003 – Sequential Detection

Auto-Arm / Disarm

[151] Partition 1 Auto-Arm/Disarm Description on [151]-[158] Partition Auto-Arm/Disarm			
	001 – Partition 1 Auto-Arming Times:	24-Hour:	
	(4-digit HH:MM)	Sunday:	Thursday:
	Default: 9999	Monday:	Friday:
		Tuesday:	Saturday:
		Wednesday:	
	002 – Partition 1 Auto-Disarm Times:	24-Hour:	
	(4-digit HH:MM)	Sunday:	Thursday:
	Default: 9999	Monday:	Friday:
		Tuesday:	Saturday:
		Wednesday:	
	003 – Partition 1 Auto-Disarming Holiday Schedule:	Holiday 1: o On ☑ Off	
	(3-digit decimal)	Holiday 2: o On ☑ Off	
		Holiday 3: o On ☑ Off	
		Holiday 4: o On ☑ Off	
	004 – Partition 1 Auto-Arming Pre-Alert (Default: 004):		
	005 – Partition 1 Auto-Arming Postpone Timer (Default: 000):		
	006 – Partition 1 No Activity Arming Timer (Default: 000):		

	007 – Partition 1 No Activity Arming Pre-Alert Timer (Default: 001):		
[152]	Partition 2 Auto-Arm/Disarm		
	001 – Partition 2 Auto-Arming Times:	24-Hour:	
	(4-digit HH:MM)	Sunday:	Thursday:
	Default: 9999	Monday:	Friday:
		Tuesday:	Saturday:
		Wednesday:	
	002 – Partition 2 Auto-Disarm Times:	24-Hour:	
	(4-digit HH:MM)	Sunday:	Thursday:
	Default: 9999	Monday:	Friday:
		Tuesday:	Saturday:
		Wednesday:	
	003 – Partition 2 Auto-Disarming Holiday Schedule:	Holiday 1: o On ☑☑ Off	
	(3-digit decimal)	Holiday 2: o On ☑ Off	
		Holiday 3: o On ☑ Off	
		Holiday 4: o On ☑ Off	
	004 – Partition 2 Auto-Arming Pre-Alert (Default: 004):		
	005 – Partition 2 Auto-Arming Postpone Timer (Default: 000):		
	006 – Partition 2 No Activity Arming Timer (Default: 000):		
	007 – Partition 2 No Activity Arming Pre-Alert Timer (Default: 001):		
[153]	Partition 3 Auto-Arm/Disarm		
	001 – Partition 3 Auto-Arming Times:	24-Hour:	
	(4-digit HH:MM)	Sunday:	Thursday:
	Default: 9999	Monday:	Friday:
		Tuesday:	Saturday:
		Wednesday:	
	002 – Partition 3 Auto-Disarm Times:	24-Hour:	
	(4-digit HH:MM)	Sunday:	Thursday:
	Default: 9999	Monday:	Friday:
		Tuesday:	Saturday:
		Wednesday:	
	003 – Partition 3 Auto-Disarming Holiday Schedule:	Holiday 1: o On ☑ Off	
	(3-digit decimal)	Holiday 2: o On ☑ Off	
		Holiday 3: o On ☑ Off	
		Holiday 4: o On ☑ Off	
	004 – Partition 3 Auto-Arming Pre-Alert (Default: 004):		
	005 – Partition 3 Auto-Arming Postpone Timer (Default: 000):		
	006 – Partition 3 No Activity Arming Timer (Default: 000):		
	007 – Partition 3 No Activity Arming Pre-Alert Timer (Default: 001):		
[154]	Partition 4 Auto-Arm/Disarm		
	001 – Partition 4 Auto-Arming Times:	24-Hour:	

	(4-digit HH:MM)	Sunday:	Thursday:
	Default: 9999	Monday:	Friday:
		Tuesday:	Saturday:
		Wednesday:	
	002 – Partition 4 Auto-Disarm Times:	24-Hour:	
	(4-digit HH:MM)	Sunday:	Thursday:
	Default: 9999	Monday:	Friday:
		Tuesday:	Saturday:
		Wednesday:	
	003 – Partition 4 Auto-Disarming Holiday Schedule:	Holiday 1: o On ☑ Off	
	(3-digit decimal)	Holiday 2: o On ☑ Off	
		Holiday 3: o On ☑ Off	
		Holiday 4: o On ☑ Off	
	004 – Partition 4 Auto-Arming Pre-Alert (Default: 004):		
	005 – Partition 4 Auto-Arming Postpone Timer (Default: 000):		
	006 – Partition 4 No Activity Arming Timer (Default: 000):		
	007 – Partition 4 No Activity Arming Pre-Alert Timer (Default: 001):		
[155]	Partition 5 Auto-Arm/Disarm		
	001 – Partition 5 Auto-Arming Times:	24-Hour:	
	(4-digit HH:MM)	Sunday:	Thursday:
	Default: 9999	Monday:	Friday:
		Tuesday:	Saturday:
		Wednesday:	
	002 – Partition 5 Auto-Disarm Times:	24-Hour:	
	(4-digit HH:MM)	Sunday:	Thursday:
	Default: 9999	Monday:	Friday:
		Tuesday:	Saturday:
		Wednesday:	
	003 – Partition 2 Auto-Disarming Holiday Schedule:	Holiday 1: o On ☑ Off	
	(3-digit decimal)	Holiday 2: o On ☑ Off	
		Holiday 3: o On ☑ Off	
		Holiday 4: o On ☑ Off	
	004 – Partition 5 Auto-Arming Pre-Alert (Default: 004):		
	005 – Partition 5 Auto-Arming Postpone Timer (Default: 000):		
	006 – Partition 5 No Activity Arming Timer (Default: 000):		
	007 – Partition 5 No Activity Arming Pre-Alert Timer (Default: 001):		
[156]	Partition 6 Auto-Arm/Disarm		
	001 – Partition 6 Auto-Arming Times:	24-Hour:	
	(4-digit HH:MM)	Sunday:	Thursday:
	Default: 9999	Monday:	Friday:
		Tuesday:	Saturday:

		Wednesday:	
	002 – Partition 6 Auto-Disarm Times:	24-Hour:	
	(4-digit HH:MM)	Sunday:	Thursday:
	Default: 9999	Monday:	Friday:
		Tuesday:	Saturday:
		Wednesday:	
	003 – Partition 6 Auto-Disarming Holiday Schedule:	Holiday 1: o On ☑ Off	
	(3-digit decimal)	Holiday 2: o On ☑ Off	
		Holiday 3: o On ☑ Off	
		Holiday 4: o On ☑ Off	
	004 – Partition 6 Auto-Arming Pre-Alert (Default: 004):		
	005 – Partition 6 Auto-Arming Postpone Timer (Default: 000):		
	006 – Partition 6 No Activity Arming Timer (Default: 000):		
	007 – Partition 6 No Activity Arming Pre-Alert Timer (Default: 001):		
[157]	Partition 7 Auto-Arm/Disarm		
	001 – Partition 7 Auto-Arming Times:	24-Hour:	
	(4-digit HH:MM)	Sunday:	Thursday:
	Default: 9999	Monday:	Friday:
		Tuesday:	Saturday:
		Wednesday:	
	002 – Partition 7 Auto-Disarm Times:	24-Hour:	
	(4-digit HH:MM)	Sunday:	Thursday:
	Default: 9999	Monday:	Friday:
		Tuesday:	Saturday:
		Wednesday:	
	003 – Partition 7 Auto-Disarming Holiday Schedule:	Holiday 1: o On ☑ Off	
	(3-digit decimal)	Holiday 2: o On ☑ Off	
		Holiday 3: o On ☑ Off	
		Holiday 4: o On ☑ Off	
	004 – Partition 7 Auto-Arming Pre-Alert (Default: 004):		
	005 – Partition 7 Auto-Arming Postpone Timer (Default: 000):		
	006 – Partition 7 No Activity Arming Timer (Default: 000):		
	007 – Partition 7 No Activity Arming Pre-Alert Timer (Default: 001):		
[158]	Partition 8 Auto-Arm/Disarm		
	001 – Partition 8 Auto-Arming Times:	24-Hour:	
	(4-digit HH:MM)	Sunday:	Thursday:
	Default: 9999	Monday:	Friday:
		Tuesday:	Saturday:

		Wednesday:	
	002 – Partition 8 Auto-Disarm Times:	24-Hour:	
	(4-digit HH:MM)	Sunday:	Thursday:
	Default: 9999	Monday:	Friday:
		Tuesday:	Saturday:
		Wednesday:	
	003 – Partition 8 Auto-Disarming Holiday Schedule:	Holiday 1: o On ☑ Off	
	(3-digit decimal)	Holiday 2: o On ☑ Off	
		Holiday 3: o On ☑ Off	
		Holiday 4: o On ☑ Off	
	004 – Partition 8 Auto-Arming Pre-Alert (Default: 004):		
	005 – Partition 8 Auto-Arming Postpone Timer (Default: 000):		
	006 – Partition 8 No Activity Arming Timer (Default: 000):		
	007 – Partition 8 No Activity Arming Pre-Alert Timer (Default: 001):		
[200]	Partition Mask		
		001 – Partition 1 to 8 Enable Mask	☑ – Partition 1
			o – Partition 2
	Descriptions on [200] Partition Mask		o – Partition 3
			o – Partition 4
			o – Partition 5
			o – Partition 6
			o – Partition 7
			o – Partition 8

Partition and Zone Assignment

[201]-[208] Partition Zone Assignment (Description on [201]-[208] Partition Zone Assignment)			
[201] Partition 1 Zone Assignment		[202] Partition 2 Zone Assignment	
	Bit 1 2 3 4 5 6 7 8		Bit 1 2 3 4 5 6 7 8
001 – 01-08	☑ ☑ ☑ ☑ ☑ ☑ ☑ ☑ ☑	001 – 01-08	□□□□□□□□
002 – 09-16	☑ ☑ ☑ ☑ ☑ ☑ ☑ ☑	002 – 09-16	□□ □ □ □ □ □□
003 – 17-24	□□ □ □ □ □ □□	003 – 17-24	□□ □ □ □ □ □□
004 – 25-32	□□□□□□□□	004 – 25-32	□□□□□□□□
005 – 33-40	□□□□□□□□	005 – 33-40	□□□□□□□□
006 – 41-48	□□ □ □ □ □ □□	006 – 41-48	□□□□□□□□
007 – 49-56	□□ □ □ □ □ □□	007 – 49-56	□□□□□□□□
008 – 57-64	□□□□□□□□	008 – 57-64	□□□□□□□□
009 – 65-72	□□□□□□□□	009 – 65-72	□□□□□□□□
010 – 73-80	□□□□□□□□	010 – 73-80	□□□□□□□□

011 – 81-88	□□ □ □ □ □ □□	011 – 81-88	□□□□□□□□
012 – 89-96	□□□□□□□□	012 – 89-96	□□□□□□□□
013 – 97-104	□□ □ □ □ □ □□	013 – 97-104	□□□□□□□□
014 – 105-112	□□□□□□□□	014 – 105-112	□□□□□□□□
015 – 113-120	□□□□□□□□	015 – 113-120	□□□□□□□□
016 – 121-128	□□□□□□□□	016 – 121-128	□□□□□□□□
[203] Partition 3 Zone Assignment		[204] Partition 4 Zone Assignment	
	Bit 1 2 3 4 5 6 7 8		Bit 1 2 3 4 5 6 7 8
001 – 01-08	□□□□□□□□	001 – 01-08	□□□□□□□□
002 – 09-16	□□□□□□□□	002 – 09-16	□□□□□□□□
003 – 17-24	□□□□□□□□	003 – 17-24	□□□□□□□□
004 – 25-32	□□□□□□□□	004 – 25-32	□□□□□□□□
005 – 33-40	□□□□□□□□	005 – 33-40	□□□□□□□□
006 – 41-48	□□□□□□□□	006 – 41-48	□□□□□□□□
007 – 49-56	□□□□□□□□	007 – 49-56	□□□□□□□□
008 – 57-64	□□□□□□□□	008 – 57-64	□□□□□□□□
009 – 65-72	□□□□□□□□	009 – 65-72	□□□□□□□□
010 – 73-80	□□□□□□□□	010 – 73-80	□□□□□□□□
011 – 81-88	□□□□□□□□	011 – 81-88	□□□□□□□□
012 – 89-96	□□□□□□□□	012 – 89-96	□□□□□□□□
013 – 97-104	□□□□□□□□	013 – 97-104	□□□□□□□□
014 – 105-112	□□□□□□□□	014 – 105-112	□□□□□□□□
015 – 113-120	□□□□□□□□	015 – 113-120	□□□□□□□□
016 – 121-128	□□□□□□□□	016 – 121-128	□□□□□□□□
[205] Partition 5 Zone Assignment		[206] Partition 6 Zone Assignment	
	Bit 1 2 3 4 5 6 7 8		Bit 1 2 3 4 5 6 7 8
001 – 01-08	□□□□□□□□	001 – 01-08	□□□□□□□□
002 – 09-16	□□□□□□□□	002 – 09-16	□□□□□□□□
003 – 17-24	□□□□□□□□	003 – 17-24	□□□□□□□□
004 – 25-32	□□□□□□□□	004 – 25-32	□□□□□□□□
005 – 33-40	□□□□□□□□	005 – 33-40	□□□□□□□□
006 – 41-48	□□□□□□□□	006 – 41-48	□□□□□□□□
007 – 49-56	□□□□□□□□	007 – 49-56	□□□□□□□□
008 – 57-64	□□□□□□□□	008 – 57-64	□□□□□□□□
009 – 65-72	□□□□□□□□	009 – 65-72	□□□□□□□□
010 – 73-80	□□□□□□□□	010 – 73-80	□□□□□□□□
011 – 81-88	□□□□□□□□	011 – 81-88	□□□□□□□□
012 – 89-96	□□□□□□□□	012 – 89-96	□□□□□□□□
013 – 97-104	□□□□□□□□	013 – 97-104	□□□□□□□□
014 – 105-112	□□□□□□□□	014 – 105-112	□□□□□□□□
015 – 113-120	□□□□□□□□	015 – 113-120	□□□□□□□□

016 – 121-128	□□□□□□□□	016 – 121-128	□□□□□□□□
[207] Partition 7 Zone Assignment		[208] Partition 8 Zone Assignment	
	Bit 1 2 3 4 5 6 7 8		Bit 1 2 3 4 5 6 7 8
001 – 01-08	□□□□□□□□	001 – 01-08	□□□□□□□□
002 – 09-16	□□□□□□□□	002 – 09-16	□□□□□□□□
003 – 17-24	□□□□□□□□	003 – 17-24	□□□□□□□□
004 – 25-32	□□□□□□□□	004 – 25-32	□□□□□□□□
005 – 33-40	□□□□□□□□	005 – 33-40	□□□□□□□□
006 – 41-48	□□□□□□□□	006 – 41-48	□□□□□□□□
007 – 49-56	□□□□□□□□	007 – 49-56	□□□□□□□□
008 – 57-64	□□□□□□□□	008 – 57-64	□□□□□□□□
009 – 65-72	□□□□□□□□	009 – 65-72	□□□□□□□□
010 – 73-80	□□□□□□□□	010 – 73-80	□□□□□□□□
011 – 81-88	□□□□□□□□	011 – 81-88	□□□□□□□□
012 – 89-96	□□□□□□□□	012 – 89-96	□□□□□□□□
013 – 97-104	□□□□□□□□	013 – 97-104	□□□□□□□□
014 – 105-112	□□□□□□□□	014 – 105-112	□□□□□□□□
015 – 113-120	□□□□□□□□	015 – 113-120	□□□□□□□□
016 – 121-128	□□□□□□□□	016 – 121-128	□□□□□□□□

Communications

[300] Panel/Receiver Communications Path Description on [300] Panel/Receiver Communication Paths		
	001 – Receiver 1:	☑ PSTN-Phone Line
		o Alt Comm Auto Routing
		o Alt Comm Rec 1
		o Alt Comm Rec 2
		o Alt Comm Rec 3
		☐ Alt Comm Rec 4
	002 – Receiver 2:	☑ PSTN-Phone Line
		☐ Alt Comm Auto Routing
		☐ Alt Comm Rec 1
		☐ Alt Comm Rec 2
		☐ Alt Comm Rec 3
		☐ Alt Comm Rec 4
	003 – Receiver 3:	☑ PSTN-Phone Line
		☐ Alt Comm Auto Routing
		☐ Alt Comm Rec 1
		☐ Alt Comm Rec 2
		☐ Alt Comm Rec 3
		☐ Alt Comm Rec 4
	004 – Receiver 4:	☑ PSTN-Phone Line

		☐ Alt Comm Auto Routing
		☐ Alt Comm Rec 1
		☐ Alt Comm Rec 2
		☐ Alt Comm Rec 3
		☐ Alt Comm Rec 4
[301] Phone Number Programming (Default: DFFFFFFFFFFFFFFFFFFFFFFFFFFFFFF)		
	(32-Digit HEX)	001 – Phone Number 1 Programming:
	Description on [301] Phone Number Programming	002 – Phone Number 2 Programming:
		003 – Phone Number 3 Programming:
		004 – Phone Number 4 Programming:
[304] Call Waiting Cancel String (Description on [304] Call Waiting Cancel String)		
	Call Waiting Cancel String (6-digit Hex; Default: DB70EF Default: FFFFFF):	

[307] Zone Reporting Description on [307] Zone Reporting (001-128 = zones 1-128)										
	☑ 1 – Alarm ☑ 2 – Alarm Restore ☑ 3 – Tamper ☑ 4 – Tamper Restore ☑ 5 – Fault ☑ 6 – Fault Restore									
	001	☑☑☑☑ ☑☐☐ 1 2 3 4 5 6 7 8	002	☑☑☑☑ ☑☐☐ 1 2 3 4 5 6 7 8	003	☑☑☑☑ ☑☐☐ 1 2 3 4 5 6 7 8	004	☑☑☑☑ ☑☐☐ 1 2 3 4 5 6 7 8	005	☑☑☑☑ ☑☐☐ 1 2 3 4 5 6 7 8
	006	☑☑☑☑ ☑☐☐ 1 2 3 4 5 6 7 8	007	☑☑☑☑ ☑☐☐ 1 2 3 4 5 6 7 8	008	☑☑☑☑ ☑☐☐ 1 2 3 4 5 6 7 8	009	☑☑☑☑ ☑☐☐ 1 2 3 4 5 6 7 8	010	☑☑☑☑ ☑☐☐ 1 2 3 4 5 6 7 8
	011	☑☑☑☑ ☑☐☐ 1 2 3 4 5 6 7 8	012	☑☑☑☑ ☑☐☐ 1 2 3 4 5 6 7 8	013	☑☑☑☑ ☑☐☐ 1 2 3 4 5 6 7 8	014	☑☑☑☑ ☑☐☐ 1 2 3 4 5 6 7 8	015	☑☑☑☑ ☑☐☐ 1 2 3 4 5 6 7 8
	016	☑☑☑☑ ☑☐☐ 1 2 3 4 5 6 7 8	017	☑☑☑☑ ☑☐☐ 1 2 3 4 5 6 7 8	018	☑☑☑☑ ☑☐☐ 1 2 3 4 5 6 7 8	019	☑☑☑☑ ☑☐☐ 1 2 3 4 5 6 7 8	020	☑☑☑☑ ☑☐☐ 1 2 3 4 5 6 7 8

	021	☑☑☑☑ ☑☐☐ 1 2 3 4 5 6 7 8	022	☑☑☑☑ ☑☐☐ 1 2 3 4 5 6 7 8	023	☑☑☑☑ ☑☐☐ 1 2 3 4 5 6 7 8	024	☑☑☑☑ ☑☐☐ 1 2 3 4 5 6 7 8	025	☑☑☑☑ ☑☐☐ 1 2 3 4 5 6 7 8
	026	☑☑☑☑ ☑☐☐ 1 2 3 4 5 6 7 8	027	☑☑☑☑ ☑☐☐ 1 2 3 4 5 6 7 8	028	☑☑☑☑ ☑☐☐ 1 2 3 4 5 6 7 8	029	☑☑☑☑ ☑☐☐ 1 2 3 4 5 6 7 8	030	☑☑☑☑ ☑☐☐ 1 2 3 4 5 6 7 8
	031	☑☑☑☑ ☑☐☐ 1 2 3 4 5 6 7 8	032	☑☑☑☑ ☑☐☐ 1 2 3 4 5 6 7 8	033	☑☑☑☑ ☑☐☐ 1 2 3 4 5 6 7 8	034	☑☑☑☑ ☑☐☐ 1 2 3 4 5 6 7 8	035	☑☑☑☑ ☑☐☐ 1 2 3 4 5 6 7 8
	036	☑☑☑☑ ☑☐☐ 1 2 3 4 5 6 7 8	037	☑☑☑☑ ☑☐☐ 1 2 3 4 5 6 7 8	038	☑☑☑☑ ☑☐☐ 1 2 3 4 5 6 7 8	039	☑☑☑☑ ☑☐☐ 1 2 3 4 5 6 7 8	040	☑☑☑☑ ☑☐☐ 1 2 3 4 5 6 7 8
	041	☑☑☑☑ ☑☐☐ 1 2 3 4 5 6 7 8	042	☑☑☑☑ ☑☐☐ 1 2 3 4 5 6 7 8	043	☑☑☑☑ ☑☐☐ 1 2 3 4 5 6 7 8	044	☑☑☑☑ ☑☐☐ 1 2 3 4 5 6 7 8	045	☑☑☑☑ ☑☐☐ 1 2 3 4 5 6 7 8
	046	☑☑☑☑ ☑☐☐ 1 2 3 4 5 6 7 8	047	☑☑☑☑ ☑☐☐ 1 2 3 4 5 6 7 8	048	☑☑☑☑ ☑☐☐ 1 2 3 4 5 6 7 8	049	☑☑☑☑ ☑☐☐ 1 2 3 4 5 6 7 8	050	☑☑☑☑ ☑☐☐ 1 2 3 4 5 6 7 8
	051	☑☑☑☑ ☑☐☐ 1 2 3 4 5 6 7 8	052	☑☑☑☑ ☑☐☐ 1 2 3 4 5 6 7 8	053	☑☑☑☑ ☑☐☐ 1 2 3 4 5 6 7 8	054	☑☑☑☑ ☑☐☐ 1 2 3 4 5 6 7 8	055	☑☑☑☑ ☑☐☐ 1 2 3 4 5 6 7 8
	056	☑☑☑☑ ☑☐☐ 1 2 3 4 5 6 7 8	057	☑☑☑☑ ☑☐☐ 1 2 3 4 5 6 7 8	058	☑☑☑☑ ☑☐☐ 1 2 3 4 5 6 7 8	059	☑☑☑☑ ☑☐☐ 1 2 3 4 5 6 7 8	060	☑☑☑☑ ☑☐☐ 1 2 3 4 5 6 7 8
	061	☑☑☑☑ ☑☐☐ 1 2 3 4 5 6 7 8	062	☑☑☑☑ ☑☐☐ 1 2 3 4 5 6 7 8	063	☑☑☑☑ ☑☐☐ 1 2 3 4 5 6 7 8	064	☑☑☑☑ ☑☐☐ 1 2 3 4 5 6 7 8	065	☑☑☑☑ ☑☐☐ 1 2 3 4 5 6 7 8
	066	☑☑☑☑ ☑☐☐ 1 2 3 4 5 6 7 8	067	☑☑☑☑ ☑☐☐ 1 2 3 4 5 6 7 8	068	☑☑☑☑ ☑☐☐ 1 2 3 4 5 6 7 8	069	☑☑☑☑ ☑☐☐ 1 2 3 4 5 6 7 8	070	☑☑☑☑ ☑☐☐ 1 2 3 4 5 6 7 8

	071	☑☑☑☑ ☑□□ 1 2 3 4 5 6 7 8	072	☑☑☑☑ ☑□□ 1 2 3 4 5 6 7 8	073	☑☑☑☑ ☑□□ 1 2 3 4 5 6 7 8	074	☑☑☑☑ ☑□□ 1 2 3 4 5 6 7 8	075	☑☑☑☑ ☑□□ 1 2 3 4 5 6 7 8
	076	☑☑☑☑ ☑□□ 1 2 3 4 5 6 7 8	077	☑☑☑☑ ☑□□ 1 2 3 4 5 6 7 8	078	☑☑☑☑ ☑□□ 1 2 3 4 5 6 7 8	079	☑☑☑☑ ☑□□ 1 2 3 4 5 6 7 8	080	☑☑☑☑ ☑□□ 1 2 3 4 5 6 7 8
	081	☑☑☑☑ ☑oo 1 2 3 4 5 6 7 8	082	☑☑☑☑ ☑oo 1 2 3 4 5 6 7 8	083	☑☑☑☑ ☑oo 1 2 3 4 5 6 7 8	084	☑☑☑☑ ☑□□ 1 2 3 4 5 6 7 8	085	☑☑☑☑ ☑□□ 1 2 3 4 5 6 7 8
	086	☑☑☑☑ ☑□□ 1 2 3 4 5 6 7 8	087	☑☑☑☑ ☑□□ 1 2 3 4 5 6 7 8	088	☑☑☑☑ ☑□□ 1 2 3 4 5 6 7 8	089	☑☑☑☑ ☑□□ 1 2 3 4 5 6 7 8	090	☑☑☑☑ ☑□□ 1 2 3 4 5 6 7 8
	091	☑☑☑☑ ☑□□ 1 2 3 4 5 6 7 8	092	☑☑☑☑ ☑□□ 1 2 3 4 5 6 7 8	093	☑☑☑☑ ☑□□ 1 2 3 4 5 6 7 8	094	☑☑☑☑ ☑□□ 1 2 3 4 5 6 7 8	095	☑☑☑☑ ☑□□ 1 2 3 4 5 6 7 8
	096	☑☑☑☑ ☑□□ 1 2 3 4 5 6 7 8	097	☑☑☑☑ ☑□□ 1 2 3 4 5 6 7 8	098	☑☑☑☑ ☑□□ 1 2 3 4 5 6 7 8	099	☑☑☑☑ ☑□□ 1 2 3 4 5 6 7 8	100	☑☑☑☑ ☑□□ 1 2 3 4 5 6 7 8
	101	☑☑☑☑ ☑□□ 1 2 3 4 5 6 7 8	102	☑☑☑☑ ☑□□ 1 2 3 4 5 6 7 8	103	☑☑☑☑ ☑□□ 1 2 3 4 5 6 7 8	104	☑☑☑☑ ☑□□ 1 2 3 4 5 6 7 8	105	☑☑☑☑ ☑□□ 1 2 3 4 5 6 7 8
	106	☑☑☑☑ ☑□□ 1 2 3 4 5 6 7 8	107	☑☑☑☑ ☑□□ 1 2 3 4 5 6 7 8	108	☑☑☑☑ ☑□□ 1 2 3 4 5 6 7 8	109	☑☑☑☑ ☑□□ 1 2 3 4 5 6 7 8	110	☑☑☑☑ ☑□□ 1 2 3 4 5 6 7 8
	111	☑☑☑☑ ☑□□ 1 2 3 4 5 6 7 8	112	☑☑☑☑ ☑□□ 1 2 3 4 5 6 7 8	113	☑☑☑☑ ☑□□ 1 2 3 4 5 6 7 8	114	☑☑☑☑ ☑□□ 1 2 3 4 5 6 7 8	115	☑☑☑☑ ☑□□ 1 2 3 4 5 6 7 8

	116	☑☑☑☑ ☑☐☐ 1 2 3 4 5 6 7 8	117	☑☑☑☑ ☑☐☐ 1 2 3 4 5 6 7 8	118	☑☑☑☑ ☑☐☐ 1 2 3 4 5 6 7 8	119	☑☑☑☑ ☑☐☐ 1 2 3 4 5 6 7 8	120	☑☑☑☑ ☑☐☐ 1 2 3 4 5 6 7 8
	121	☑☑☑☑ ☑☐☐ 1 2 3 4 5 6 7 8	122	☑☑☑☑ ☑☐☐ 1 2 3 4 5 6 7 8	123	☑☑☑☑ ☑☐☐ 1 2 3 4 5 6 7 8	124	☑☑☑☑ ☑☐☐ 1 2 3 4 5 6 7 8	125	☑☑☑☑ ☑☐☐ 1 2 3 4 5 6 7 8
	126	☑☑☑☑ ☑☐☐ 1 2 3 4 5 6 7 8	127	☑☑☑☑ ☑☐☐ 1 2 3 4 5 6 7 8	128	☑☑☑☑ ☑☐☐ 1 2 3 4 5 6 7 8				

[308] Event Reporting Description on		
	001 – Miscellaneous Alarm 1	☑1 – Duress Alarm ☑ 2 – Opening After Alarm ☑ 3 – Recent Closing Alarm ☑ 4 – Zone Expander Supervisory Alarm ☑ 5 – Zone Expander Supervisory Alarm Restore ☑ 6 – Burglary Verified ☑ 7 – Burglary Not Verified Alarm ☑ 8 – Alarm Cancel
	002 – Miscellaneous Alarm 2	☑ 1 – Holdup Verified Alarm
	011 – Priority Alarms 1	☑ 1 – Keypad Fire Alarm-F Key ☑ 2 – Keypad Fire Restore ☑ 3 – Keypad Medical Alarm-M Key ☑ 4 – Keypad Medical Restore ☑ 5 – Keypad Panic Alarm-P Key Alarm ☑ 6 – Keypad Panic Restore ☑ 7 – Auxiliary Input Alarm ☑ 8 – Auxiliary Input Alarm Restore
	021 – Fire Alarms 1	☑ 3 – PGM 2 2-Wire Alarm ☑ 4 – PGM 2 2-Wire Alarm Restore
	101 – Tamper Events	☑ 3 – Module Tamper ☑ 4 – Module Tamper Restore ☑ 5 – Keypad Lockout ☑ 7 – Remote Lockout

[308] Event Reporting **Description on**		
	201 – Open/Close Events 1	☑ 1 – User Closing ☑ 2 – User Opening ☑ 5 – Special Closing ☑☑ 6 – Special Opening ☑ 7 – Keyswitch Opening ☑ 8 – Keyswitch Closing
	202 – Open/Close Events 2	☑ 1 – Automatic Closing ☑ 2 – Automatic Disarm ☑ 3 – Auto Arm Cancellation/ Postpone
	211 – Miscellaneous Open/ Close Events	☑ 1 – Late to Close ☑ 2 – Late to Open ☑ 5 – Exit Fault
	221 – Bypass Events	☑ 1 – Zone Bypass ☑ 2 – Zone Unbypass ☑ 3 – Partial Closing
	301 – Panel Events 1	☑**o** 1 – Panel AC Fail Trouble ☑**o** 2 – Panel AC Fail Restore ☑ 3 – Panel Low Battery Trouble ☑ 4 – Panel Low Battery Trouble Restore ☑ 5 – Panel Battery Absent Trouble ☑ 6 – Panel Battery Absent Trouble Restore

[308] Event Reporting Description on		
	302 – Panel Events 2	☑ 1 – Bell Circuit Trouble ☑ 2 – Bell Circuit Trouble Restore ☑ 3 – Telephone Line Trouble ☑ 4 – Telephone Line Trouble Restore ☑ 5 – Auxiliary Trouble ☑ 6 – Auxiliary Trouble Restore
	305 – Panel Events 5	☑ 3 – PGM 2 2-Wire Trouble ☑ 4 – PGM 2 2-Wire Trouble Restore
	311 – Maintenance Events 1	☑ 1 – RF Jam Trouble ☑ 2 – RF Jam Trouble Restore ☑ 3 – Fire Trouble ☑ 4 – Fire Trouble Restore ☑ 5 – Cold Start ☑ 6 – Delinquency ☑ 6 – Delinquency ☑ 7 – Self Test Trouble ☑ 8 – Self Test Trouble Restore

[308] Event Reporting Description on		
	312 – Maintenance Events 2	NA ☐ 1 – Installer Lead IN ☐ 2 – Installer Lead OUT ☐ 3 – DLS Lead IN ☐ 4 – DLS Lead OUT ☐ 5 – SA Lead IN ☐ 6 – SA Lead OUT ☐ 7 – Event Buffer 75% Full EN ☐ 1 – Installer Lead IN ☐ 2 – Installer Lead OUT ☐ 3 – DLS Lead IN ☐ 4 – DLS Lead OUT ☐ 5 – SA Lead IN ☑ 6 – SA Lead OUT ☑ 7 – Event Buffer 75% Full
	313 – Maintenance Events 3	☑ 1 – Firmware Update Begin ☑ 2 – Firmware Update Successful ☑ 3 – Firmware Update Fail
	314 – Maintenance Events 4	☑ 1 – Gas Trouble ☑ 2 – Gas Trouble Restore ☑ 3 – Heat Trouble ☑ 4 – Heat Trouble Restore ☑ 5 – Freeze Trouble ☑ 6 – Freeze Trouble Restore ☑ 7 – Probe Disconnected Trouble ☑ 8 – Probe Disconnected Restore

[308] Event Reporting Description on		
	321 – Receiver Events	☑ 2 – Receiver 1 FTC Restore ☑ 4 – Receiver 2 FTC Restore ☑6 – Receiver 3 FTC Restore ☑ ☑ 8 – Receiver 4 FTC Restore
	331 – Module Events 1	☑ 1 – Module AC Trouble ☑ 2 – Module AC Trouble Restore ☑ 3 – Module Battery Trouble ☑ 4 – Module Battery Trouble Restore ☑ 5 – Module Battery Absent ☑ 6 – Module Battery Absent Restore
	332 – Module Events 2	☑ 1 – Module Low Voltage Trouble ☑ 2 – Module Low Voltage Restore ☑ 3 – Module Supervisory ☑ 4 – Module Supervisory Restore ☑ 5 – Module Aux Trouble ☑ 6 – Module Aux Trouble Restore
	335 – Module Events 5	☑ 1 – Output 1 Fault ☑ 2 – Output 1 Fault Restore

[308] Event Reporting Description on		
	351 – Alternate Communicator 1	☑ 1 – Alt. Comm. Module Comm Fault ☑ 2 – Alt. Comm. Module Comm Fault Restore ☑ 7 – Alt. Comm. Radio/SIM Failure ☑8 – Alt. Comm. Radio/SIM Failure Restore
	352 – Alternate Communicator 2	☑ 1 – Alt. Comm. Network Fault ☑ 2 – Alt. Comm. Network Fault Restore ☑ 5 – Alt. Comm. Ethernet Trouble ☑ 6 – Alt. Comm. Ethernet Trouble Restore
	354 – Alternate Communicator 4	☑ 1 – Alt. Comm Receiver 1 Trouble ☑ 2 – Alt. Comm Receiver 1 Restore ☑ 3 – Alt. Comm Receiver 2 Trouble ☑ 4 – Alt. Comm Receiver 2 Restore ☑ 5 – Alt. Comm Receiver 3 Trouble ☑ 6 – Alt. Comm Receiver 3 Restore ☑ 7 – Alt. Comm Receiver 4 Trouble ☑ 8 – Alt. Comm Receiver 4 Restore

[308] Event Reporting Description on		
	355 – Alternate Communicator 5	☑ 1 – Alt. Comm Receiver 1 Supervision Failure ☑ 2 – Alt. Comm Receiver 1 Supervision Restore ☑ 3 – Alt. Comm Receiver 2 Supervision Failure ☑ 4 – Alt. Comm Receiver 2 Supervision Restore ☑ 5 – Alt. Comm Receiver 3 Supervision Failure ☑ 6 – Alt. Comm Receiver 3 Supervision Restore ☑ 7 – Alt. Comm Receiver 4 Supervision Failure ☑ 8 – Alt. Comm Receiver 4 Supervision Restore
	361 – Wireless Device Events	☑ 1 – Device AC Fail ☑ 2 – Device AC Restore ☑ 3 – Device Low Battery ☑ 4 – Device Low Battery Restore ☑ 5 – Device Fault ☑ 6 – Device Fault Restore
	401 – System Test Events	☑ 1 – Walk Test Start ☑ 2 – Walk Test End ☑ 3 – Periodic Test Transmission ☑ 4 – Periodic Test Transmission with Trouble ☑ 5 – System Test

Call Directions

[309] System Call Direction Description on [309] System Call Direction			
	001 – Maintenance Events:	☑ Receiver #1	☐ Receiver #3
		☐ Receiver #2	☐ Receiver #4
	002 – Test Transmission Events:	☑ Receiver #1	☐ Receiver #3
		☐ Receiver #2	☐ Receiver #4
[310] Account Codes (4-Digit HEX; Default FFFF)			
	000 – System Account Code (6-digit Hex; Default: FFFFFF):		
	001 – Partition 1 Account Code:		
	002 – Partition 2 Account Code:		
	003 – Partition 3 Account Code:		
	004 – Partition 4 Account Code:		
	005 – Partition 5 Account Code:		
	006 – Partition 6 Account Code:		
	007 – Partition 7 Account Code:		
	008 – Partition 8 Account Code:		
[311] Partition 1 Call Directions Description on [311]-[318] Partition Call Directions			
	001 – Partition 1 Alarm/ Restore:	☑ Receiver #1	☐ Receiver #3
		☐☑ Receiver #2	☐ Receiver #4
	002 – Partition 1 Tamper/ Restore:	☑ Receiver #1	☐ Receiver #3
		☐ ☑ Receiver #2	☐ Receiver #4
	003 – Partition 1 Opening/ Closing:	☐☑☑ Receiver #1	☐ Receiver #3
		☐ Receiver #2	☐ Receiver #4
[312]	Partition 2 Call Directions		
	001 – Partition 2 Alarm/ Restore:	☑ Receiver #1	☐ Receiver #3
		☐ Receiver #2	☐ Receiver #4
	002 – Partition 2 Tamper/ Restore:	☑ Receiver #1	☐ Receiver #3
		☐ Receiver #2	☐ Receiver #4
	003 – Partition 2 Opening/ Closing:	☐ Receiver #1	☐ Receiver #3
		☐ Receiver #2	☐ Receiver #4
[313]	Partition 3 Call Directions		
	001 – Partition 3 Alarm/ Restore:	☑ Receiver #1	☐ Receiver #3
		☐ Receiver #2	☐ Receiver #4
	002 – Partition 3 Tamper/ Restore:	☑ Receiver #1	☐ Receiver #3
		☐ Receiver #2	☐ Receiver #4
	003 – Partition 3 Opening/ Closing:	☐ Receiver #1	☐ Receiver #3

		☐ Receiver #2	☐ Receiver #4
[314]	Partition 4 Call Directions		
	001 – Partition 4 Alarm/ Restore:	☑ Receiver #1	☐ Receiver #3
		☐ Receiver #2	☐ Receiver #4
	002 – Partition 4 Tamper/ Restore:	☑ Receiver #1	☐ Receiver #3
		☐ Receiver #2	☐ Receiver #4
	003 – Partition 4 Opening/ Closing:	☐ Receiver #1	☐ Receiver #3
		☐ Receiver #2	☐ Receiver #4
[315]	Partition 5 Call Directions		
	001 – Partition 5 Alarm/ Restore:	☑ Receiver #1	☐ Receiver #3
		☐ Receiver #2	☐ Receiver #4
	002 – Partition 5 Tamper/ Restore:	☐ Receiver #1	☐ Receiver #3
		☐ Receiver #2	☐ Receiver #4
	003 – Partition 5 Opening/ Closing:	☐ Receiver #1	☐ Receiver #3
		☐ Receiver #2	☐ Receiver #4
[316]	Partition 6 Call Directions		
	001 – Partition 6 Alarm/ Restore:	☑ Receiver #1	☐ Receiver #3
		☐ Receiver #2	☐ Receiver #4
	002 – Partition 6 Tamper/ Restore:	☑ Receiver #1	☐ Receiver #3
		☐ Receiver #2	☐ Receiver #4
	003 – Partition 6 Opening/ Closing:	☐ Receiver #1	☐ Receiver #3
		☐ Receiver #2	☐ Receiver #4
[317]	Partition 7 Call Directions		
	001 – Partition 7 Alarm/ Restore:	☑ Receiver #1	☐ Receiver #3
		☐ Receiver #2	☐☐ Receiver #4
	002 – Partition 7 Tamper/ Restore:	☑ Receiver #1	☐ Receiver #3
		☐ Receiver #2	☐ Receiver #4
	003 – Partition 7 Opening/ Closing:	☐ Receiver #1	☐ Receiver #3
		☐ Receiver #2	☐ Receiver #4
[318]	Partition 8 Call Directions		
	001 – Partition 8 Alarm/ Restore:	☑ Receiver #1	☐ Receiver #3
		☐☐ Receiver #2	o Receiver #4
	002 – Partition 8 Tamper/ Restore:	☑ Receiver #1	☐ Receiver #3
		☐ Receiver #2	☐ Receiver #4
	003 – Partition 8 Opening/ Closing:	☐ Receiver #1	☐ Receiver #3
		☐ Receiver #2	☐ Receiver #4

[350] Communicator Formats Description on [350] Communicator Formats			
	(2-Digit decimal)	001 – Receiver 1: 03	003 – Receiver 3: 03
	Range: 03= Contact ID, 04= SIA (Default)	002 – Receiver 2: 03	004 – Receiver 4: 03

[377] Communication Variables (3-digit decimal); Range: 000-255 attempts unless otherwise noted Description on [377] Communication Variables		
	001 – Swinger Shutdown Attempts:	Alarms and Restore (000-014):
	Default: 003002	Tampers and Restore:
	(CP-01 Default: 002)	Maintenance and Restore:
	002 – Communication Delays:	Communication Zone Delay (Default: 000 Default: 030):
		AC Failure Communication Delay (Default:030 minutes/Hours):
		TLM Trouble Delay Default: 010 checks Default:002 checks:
		Wireless Zone Low Bat. Transmission Delay (Default: 007 days):
		Delinquency Transmission Cycle Delay (Default: 030000 days/hours):
		Communications Cancel Window (Default: 000 minutes Default: 005 minutes):
	003 – Periodic Test Transmission Cycle (Default:030; UL:007 hours/days):	
	004 – Periodic Test Transmission Time of Day (Default: 9999; UL:0445):	
	011 – Maximum Dialing Attempts: (Default: 005):	
	012 – Delay Between PSTN Attempts: (Default: 003 seconds):	
	013 – Delay Between Force Attempts: (Default: 020 seconds):	
	014 – Post Dial Wait for Handshake: (Range: 001-255; Default: 040 Seconds; UL=45):	
	015 – IP/GS Wait for Ack: (Range: 001-255; Default: 060 seconds):	
	016 – IP/Cellular Fault Check Timer: (Range: 003-255; Default: 010):	
[380]	Communicator Option 1	
		1 – □ Communications Enabled
		2 – □ Restore on Bell Time-out
	Description on [380] Communicator Option 1	3 – □ Pulse Dialing
		4 – □ Pulse Dial after 5th Attempt
		5 – □ Parallel Communications
		6 – □ Alternate Dial (N.A.)
		6 – □ Alternate Dial (EN)
		7 – □ Reduced Dialing Attempts
		8 – □ Activity Delinquency
[381]	Communicator Option 2	
		1 – □ Keypad Ringback
		2 – □ Bell Ringback
		4 – □ Closing Confirmation

		8 – ☐ Communications Priority Options
[382]	Communicator Option 3	
		2 – ☐ Walk Test Communication
		4 – ☐ Call Waiting Cancel
		5 –☐ Alternate Communicator Enable/ Disable
		6 – ☐ AC Failure Communication Delay in Hours
		8 – ☐ Tamper Limit
[383]	Communicator Option 4	
		1 – ☐ Phone Number Account Code
		2 – ☐ 6-Digit Account Code
		5 – ☐ Communicate FTC Events
[384]	Communicator Backup Options	
		2 – ☑ Backup Options - Receiver 2
	Description on [384] Communicator Backup Options	3 – ☐ Backup Options - Receiver 3
		4 – ☐ Backup Options - Receiver 4
[385]	Audio Module Talk/Listen Mask	
	Description on [385] Audio Module Talk \Listen Mask	1 – ☐ Talk/Listen on Receiver 1 2 - ☐ Talk/Listen on Receiver 2 3 – ☐ Talk/Listen on Receiver 3 4 – ☐ Talk/Listen on Receiver 4

DLS Programming

[401] DLS/SA Options		
		1 – oR ☑ Double Call
	Descriptions on [401] DLS/SA Options	2 – ☑ User Enables DLS
		3 – ☐ DLS Callback
		4 – ☐☑ User Call up
		6 – ☐ Panel Call up and Baud Rate
		7 – ☑ Alt. Comm. DLS
[402] PSTN DLS Phone Number Programming		
	(31-digit phone number; Default: DFFFFFFFFFFFFFFFFFFFFFFFFFFFFFF):	
[403] DLS Access Code		
	(6-digit hex; 000000-FFFFFF; Default: 212800632100):	
[404] DLS/SA Panel ID		
	(10-digit hex; 0000000000-FFFFFFFFFF; Default 2128000000):	
[405] PSTN Double Call Timer		
	(3-decimal; 000-255; Default: 060030):	
[406] PSTN Number of Rings to Answer On		
	(3-decimal; 000-255; Default 008000008):	
[407] SA Access Code		
	(6-digit hex; 000000-FFFFFF; Default: FFFFFF):	
[410] Automatic DLS Options		
	001 – Auto DLS Options	1 – ☐ Periodic DLS
		3 – ☐ DLS / Event Buffer 75% Full

		8 – □ DLS on Programming Change
	002 – Periodic DLS Days (3-digit decimal; 000-255; Default: 000 days):	
	003 – Periodic DLS Time (4-digit decimal; HH:MM; 0000-2359; Default: 0000):	
	007 – Delay Call Window Start (4-digit decimal; 0000-2359; HH:MM)	1 – 0000 Delay Call Window Start
	Default: 0000	2 – 0000 Delay Call Window End

Virtual Inputs

[560] Virtual Inputs			
	(3 digit decimal)	001 - Virtual Input 1:	017 - Virtual Input 17:
		002 - Virtual Input 2:	018 - Virtual Input 18:
	Description on Virtual Inputs	003 - Virtual Input 3:	019 - Virtual Input 19:
	Default: 000	004 - Virtual Input 4:	020 - Virtual Input 20:
		005 - Virtual Input 5:	021 - Virtual Input 21:
		006 - Virtual Input 6:	022 - Virtual Input 22:
		007 - Virtual Input 7:	023 - Virtual Input 23:
		008 - Virtual Input 8:	024 - Virtual Input 24:
		009 - Virtual Input 9:	025 - Virtual Input 25:
		010 - Virtual Input 10:	026 - Virtual Input 26:
		011 - Virtual Input 11:	027 - Virtual Input 27:
		012 - Virtual Input 12:	028 - Virtual Input 28:
		013 - Virtual Input 13:	029 - Virtual Input 29:
		014 - Virtual Input 14:	030 - Virtual Input 30:
		015 - Virtual Input 15:	031 - Virtual Input 31:
		016 - Virtual Input 16:	032 - Virtual Input 32:

Schedule Programming

[601] Programming Schedule 1 Description on [601]-[604] Schedule Labels					
		Interval 1	101 – Start Time:		102 – End Time:
			103 – Days Assignment:		104 – Holiday Assignment:
		(4- digit decimal)		01 – □ Sunday	□ Holiday 1
		HH:MM		02 – □ Monday	□ Holiday 2
		to HH:MM		03 – □ Tuesday	□ Holiday 3
		Default: 0000		04 – □ Wednesday	□ Holiday 4
				05 – □ Thursday	
				06 – □ Friday	
				07 – □ Saturday	
		Interval 2	201 – Start Time:		202 – End Time:
			203 – Days Assignment:		204 – Holiday Assignment:
		(4- digit decimal)		01 – □ Sunday	□ Holiday 1
		HH:MM		02 – □ Monday	□ Holiday 2
		to HH:MM		03 – □ Tuesday	□ Holiday 3

		Default: 0000		04 – □ Wednesday	□ Holiday 4
				05 – □ Thursday	
				06 – □ Friday	
				07 – □ Saturday	
		Interval 3	301 – Start Time:		302 – End Time:
			303 – Days Assignment:		304 – Holiday Assignment:
		(4- digit decimal)		01 – □ Sunday	□ Holiday 1
		HH:MM		02 – □ Monday	□ Holiday 2
		to HH:MM		03 – □ Tuesday	□ Holiday 3
		Default: 0000		04 – □ Wednesday	□ Holiday 4
				05 – □ Thursday	
				06 – □ Friday	
				07 – □ Saturday	
		Interval 4	401 – Start Time:		402 – End Time:
			403 – Days Assignment:		404 – Holiday Assignment:
		(4- digit decimal)		01 – □ Sunday	□ Holiday 1
		HH:MM		02 – □ Monday	□ Holiday 2
		to HH:MM		03 – □ Tuesday	□ Holiday 3
		Default: 0000		04 – □ Wednesday	□ Holiday 4
				05 – □ Thursday	
				06 – □ Friday	
				07 – □ Saturday	
[602] Programming Schedule 2					
		Interval 1	101 – Start Time:		102 – End Time:
			103 – Days Assignment:		104 – Holiday Assignment:
		(4- digit decimal)		01 – □ Sunday	□ Holiday 1
		HH:MM		02 – □ Monday	□ Holiday 2
		t□ HH:MM		03 – □ Tuesday	□ Holiday 3
		Default: 0000		04 –□Wednesday	□ Holiday 4
				05 – □ Thursday	
				06 – □ Friday	
				07 – □ Saturday	
		Interval 2	201 – Start Time:		202 – End Time:
			203 – Days Assignment:		204 – Holiday Assignment:
		(4- digit decimal)		01 – □ Sunday	□ Holiday 1
		HH:MM		02 – □ Monday	□ Holiday 2
		to HH:MM		03 – □ Tuesday	□ Holiday 3
		Default: 0000		04 – □ Wednesday	□ Holiday 4
				05 – □ Thursday	
				06 – □ Friday	
				07 – □ Saturday	
		Interval 3	301 – Start Time:		302 – End Time:

			303 – Days Assignment:		304 – Holiday Assignment:
		(4- digit decimal)		01 – ☐ Sunday	☐ Holiday 1
		HH:MM		02 – ☐ Monday	☐ Holiday 2
		to HH:MM		03 – ☐ Tuesday	☐ Holiday 3
		Default: 0000		04 – ☐ Wednesday	☐ Holiday 4
				05 – ☐ Thursday	
				06 – ☐ Friday	
				07 – ☐ Saturday	
		Interval 4	401 – Start Time:		402 – End Time:
			403 – Days Assignment:		404 – Holiday Assignment:
		(4- digit decimal)		01 – ☐ Sunday	☐ Holiday 1
		HH:MM		02 – ☐ Monday	☐ Holiday 2
		to HH:MM		03 – ☐ Tuesday	☐ Holiday 3
		Default: 0000		04 – ☐ Wednesday	☐ Holiday 4
				05 – ☐ Thursday	
				06 – ☐ Friday	
				07 – ☐ Saturday	
[603] Programming Schedule 3					
		Interval 1	101 – Start Time:		102 – End Time:
			103 – Days Assignment:		104 – Holiday Assignment:
		(4- digit decimal)		01 – ☐ Sunday	☐ Holiday 1
		HH:MM		02 – ☐ Monday	☐ Holiday 2
		to HH:MM		03 – ☐ Tuesday	☐ Holiday 3
		Default: 0000		04 – ☐ Wednesday	☐ Holiday 4
				05 – ☐ Thursday	
				06 – ☐ Friday	
				07 – ☐ Saturday	
		Interval 2	201 – Start Time:		202 – End Time:
			203 – Days Assignment:		204 – Holiday Assignment:
		(4- digit decimal)		01 – ☐ Sunday	☐ Holiday 1
		HH:MM		02 – ☐ Monday	☐ Holiday 2
		to HH:MM		03 – ☐ Tuesday	☐ Holiday 3
		Default: 0000		04 – ☐ Wednesday	☐ Holiday 4
				05 – ☐ Thursday	
				06 – ☐ Friday	
				07 – ☐ Saturday	
		Interval 3	301 – Start Time:		302 – End Time:
			303 – Days Assignment:		304 – Holiday Assignment:
		(4- digit decimal)		01 – ☐ Sunday	☐ Holiday 1
		HH:MM		02 – ☐ Monday	☐ Holiday 2
		to HH:MM		03 – ☐ Tuesday	☐ Holiday 3
		Default: 0000		04 – ☐ Wednesday	☐ Holiday 4

				05 – □ Thursday	
				06 – □ Friday	
				07 – □ Saturday	
		Interval 4	401 – Start Time:		402 – End Time:
			403 – Days Assignment:		404 – Holiday Assignment:
		(4- digit decimal)		01 – □ Sunday	□ Holiday 1
		HH:MM		02 – □ Monday	□ Holiday 2
		to HH:MM		03 – □ Tuesday	□ Holiday 3
		Default: 0000		04 – □ Wednesday	□ Holiday 4
				05 – □ Thursday	
				06 – □ Friday	
				07 – □ Saturday	
[604] Programming Schedule 4					
		Interval 1	101 – Start Time:		102 – End Time:
			103 – Days Assignment:		104 – Holiday Assignment:
		(4- digit decimal)		01 – □ Sunday	□ Holiday 1
		HH:MM to HH:MM		02 – □ Monday	□ Holiday 2
		Default: 0000		03 – □ Tuesday	□ Holiday 3
				04 – □ Wednesday	□ Holiday 4
				05 – □ Thursday	
				06 – □ Friday	
				07 – □ Saturday	
		Interval 2	201 – Start Time:		202 – End Time:
			203 – Days Assignment:		204 – Holiday Assignment:
		(4- digit decimal)		01 – □ Sunday	□ Holiday 1
		HH:MM to HH:MM		02 – □ Monday	□ Holiday 2
		Default: 0000		03 – □ Tuesday	□ Holiday 3
				04 – □ Wednesday	□ Holiday 4
				05 – □ Thursday	
				06 – □ Friday	
				07 – □ Saturday	
		Interval 3	301 – Start Time:		302 – End Time:
			303 – Days Assignment:		304 – Holiday Assignment:
		(4- digit decimal)		01 – □ Sunday	□ Holiday 1
		HH:MM to HH:MM		02 – □ Monday	□ Holiday 2
		Default: 0000		03 – □ Tuesday	□ Holiday 3
				04 – □ Wednesday	□ Holiday 4
				05 – □ Thursday	
				06 – □ Friday	
				07 – □ Saturday	
		Interval 4	401 – Start Time:		402 – End Time:
			403 – Days Assignment:		404 – Holiday Assignment:

		(4- digit decimal)		01 – ☐ Sunday	☐ Holiday 1
		HH:MM to HH:MM		02 – ☐ Monday	☐ Holiday 2
		Default: 0000		03 – ☐ Tuesday	☐ Holiday 3
				04 – ☐ Wednesday	☐ Holiday 4
				05 – ☐ Thursday	
				06 – ☐ Friday	
				07 – ☐ Saturday	
[711] Holiday Group 1					
	(6-Digit Decimal)	001 – Holiday Group 1 Date 1:			
	MMDDYY	002 – Holiday Group 1 Date 2:			
	Default: 000000	003 – Holiday Group 1 Date 3:			
		004 – Holiday Group 1 Date 4:			
		005 – Holiday Group 1 Date 5:			
	Description on [711]-[714] Holiday Schedules	006 – Holiday Group 1 Date 6:			
		007 – Holiday Group 1 Date 7:			
		008 – Holiday Group 1 Date 8:			
		009-099 – Holiday Group 1 Date 9-99:			
[712] Holiday Group 2					
	(6-Digit Decimal)	001 – Holiday Group 2 Date 1:			
	MMDDYY	002 – Holiday Group 2 Date 2:			
	Default: 000000	003 – Holiday Group 2 Date 3:			
		004 – Holiday Group 2 Date 4:			
		005 – Holiday Group 2 Date 5:			
	Description on [711]-[714] Holiday Schedules	006 – Holiday Group 2 Date 6:			
		007 – Holiday Group 2 Date 7:			
		008 – Holiday Group 2 Date 8:			
		009-099 – Holiday Group 2 Date 9-99:			
[713] Holiday Group 3					
	(6-Digit Decimal)	001 – Holiday Group 3 Date 1:			
	MMDDYY	002 – Holiday Group 3 Date 2:			
	Default: 000000	003 – Holiday Group 3 Date 3:			
		004 – Holiday Group 3 Date 4:			
	Description on [711]-[714] Holiday Schedules	005 – Holiday Group 3 Date 5:			
		006 – Holiday Group 3 Date 6:			
		007 – Holiday Group 3 Date 7:			
		008 – Holiday Group 3 Date 8:			
		009-099 – Holiday Group 3 Date 9-99:			
[714] Holiday Group 4					
	(6-Digit Decimal)	001 – Holiday Group 4 Date 1:			
	MMDDYY	002 – Holiday Group 4 Date 2:			

	Default: 000000	003 – Holiday Group 4 Date 3:
		004 – Holiday Group 4 Date 4:
		005 – Holiday Group 4 Date 5:
	Description on [711]-[714] Holiday Schedules	006 – Holiday Group 4 Date 6:
		007 – Holiday Group 4 Date 7:
		008 – Holiday Group 4 Date 8:
		009-099 – Holiday Group 4 Date 9-99:

Audio Module Programming

[802] Audio Module Verification 2-digit entry - 00= No station assigned; 01 - 04 for audio stations 1-4; (Default: 00)		
	001	Zone 1 Station Assignment:
	002	Zone 2 Station Assignment:
	003	Zone 3 Station Assignment:
	004	Zone 4 Station Assignment:
	005	Zone 5 Station Assignment:
	006	Zone 6 Station Assignment:
	007	Zone 7 Station Assignment:
	008	Zone 8 Station Assignment:
	009	Zone 9 Station Assignment:
	010	Zone 10 Station Assignment:
	011	Zone 11 Station Assignment:
	012	Zone 12 Station Assignment:
	013	Zone 13 Station Assignment:
	014	Zone 14 Station Assignment:
	015	Zone 15 Station Assignment:
	016	Zone 16 Station Assignment:
	017	Zone 17 Station Assignment:
	018	Zone 18 Station Assignment:
	019	Zone 19 Station Assignment:
	020	Zone 20 Station Assignment:
	021	Zone 21 Station Assignment:
	022	Zone 22 Station Assignment:
	023	Zone 23 Station Assignment:
	024	Zone 24 Station Assignment:
	025	Zone 25 Station Assignment:
	026	Zone 26 Station Assignment:
	027	Zone 27 Station Assignment:
	028	Zone 28 Station Assignment:
	029	Zone 29 Station Assignment:
	030	Zone 30 Station Assignment:
	031	Zone 31 Station Assignment:

	032	Zone 32 Station Assignment:
	033	Zone 33 Station Assignment:
	034	Zone 34 Station Assignment:
	035	Zone 35 Station Assignment:
	036	Zone 36 Station Assignment:
	037	Zone 37 Station Assignment:
	038	Zone 38 Station Assignment:
	039	Zone 39 Station Assignment:
	040	Zone 40 Station Assignment:
	041	Zone 41 Station Assignment:
	042	Zone 42 Station Assignment:
	043	Zone 43 Station Assignment:
	044	Zone 44 Station Assignment:
	045	Zone 45 Station Assignment:
	046	Zone 46 Station Assignment:
	047	Zone 47 Station Assignment:
	048	Zone 48 Station Assignment:
	049	Zone 49 Station Assignment:
	050	Zone 50 Station Assignment:
	051	Zone 51 Station Assignment:
	052	Zone 52 Station Assignment:
	053	Zone 53 Station Assignment:
	054	Zone 54 Station Assignment:
	055	Zone 55 Station Assignment:
	056	Zone 56 Station Assignment:
	057	Zone 57 Station Assignment:
	058	Zone 58 Station Assignment:
	059	Zone 59 Station Assignment:
	060	Zone 60 Station Assignment:
	061	Zone 61 Station Assignment:
	062	Zone 62 Station Assignment:
	063	Zone 63 Station Assignment:
	064	Zone 64 Station Assignment:
	065	Zone 65 Station Assignment:
	066	Zone 66 Station Assignment:
	067	Zone 67 Station Assignment:
	068	Zone 68 Station Assignment:
	069	Zone 69 Station Assignment:
	070	Zone 70 Station Assignment:
	071	Zone 71 Station Assignment:
	072	Zone 72 Station Assignment:
	073	Zone 73 Station Assignment:
	074	Zone 74 Station Assignment:
	075	Zone 75 Station Assignment:

	076	Zone 76 Station Assignment:
	077	Zone 77 Station Assignment:
	078	Zone 78 Station Assignment:
	079	Zone 79 Station Assignment:
	080	Zone 80 Station Assignment:
	081	Zone 81 Station Assignment:
	082	Zone 82 Station Assignment:
	083	Zone 83 Station Assignment:
	084	Zone 84 Station Assignment:
	085	Zone 85 Station Assignment:
	086	Zone 86 Station Assignment:
	087	Zone 87 Station Assignment:
	088	Zone 88 Station Assignment:
	089	Zone 89 Station Assignment:
	090	Zone 90 Station Assignment:
	091	Zone 91 Station Assignment:
	092	Zone 92 Station Assignment:
	093	Zone 93 Station Assignment:
	094	Zone 94 Station Assignment:
	095	Zone 95 Station Assignment:
	096	Zone 96 Station Assignment:
	097	Zone 97 Station Assignment:
	098	Zone 98 Station Assignment:
	099	Zone 99 Station Assignment:
	100	Zone 100 Station Assignment:
	101	Zone 101 Station Assignment:
	102	Zone 102 Station Assignment:
	103	Zone 103 Station Assignment:
	104	Zone 104 Station Assignment:
	105	Zone 105 Station Assignment:
	106	Zone 106 Station Assignment:
	107	Zone 107 Station Assignment:
	108	Zone 108 Station Assignment:
	109	Zone 109 Station Assignment:
	110	Zone 110 Station Assignment:
	111	Zone 111 Station Assignment:
	112	Zone 112 Station Assignment:
	113	Zone 113 Station Assignment:
	114	Zone 114 Station Assignment:
	115	Zone 115 Station Assignment:
	116	Zone 116 Station Assignment:
	117	Zone 117 Station Assignment:
	118	Zone 118 Station Assignment:
	119	Zone 119 Station Assignment:

	120	Zone 120 Station Assignment:
	121	Zone 121 Station Assignment:
	122	Zone 122 Station Assignment:
	123	Zone 123 Station Assignment:
	124	Zone 124 Station Assignment:
	125	Zone 125 Station Assignment:
	126	Zone 126 Station Assignment:
	127	Zone 127 Station Assignment:
	128	Zone 128 Station Assignment:

[802][600]			
	600	2-Way Audio Trigger Option 1	1 - ☐ Tampers 2 - ☐Future Use 3 - ☐ [A] Key Alarm 4 - ☐ [P] Key Alarm 5 - ☐ Duress Alarm 6 - ☐ Opening After Alarm 7 - ☐ Future Use 8 - ☐ Zone Supervision Alarm
	603	2-Way Audio Control Option 1	1 - ☐ Future Use 2 - ☐ Listen to all zones / Listen to zones in alarm 3 - ☐ Future Use 4 - ☐ Siren Active During 2-Way Audio 5 - ☐ Hang-Up Auto Detection 6 - ☐ User Call-In 7 - ☐ For Future Use 8 - ☑ 2-Way Audio Initiated by CS
	605	Record Options	1 - ☐ Audio Capture Enable 2 - ☐ Erase on FTC 3 - ☐ Future Use 4 - ☐ Future Use 5 - ☐ Future Use 6 - ☐ Future Use 7 - ☐ Future Use 8 - ☐ Future Use
	606	Audio Station Record Control Option 1	1 - ☐ Audio Station 1 Record 2 - ☐ Audio Station 2 Record 3 - ☐ Audio Station 3 Record 4 - ☐ Audio Station 4 Record 5 - ☐ Future Use 6 - ☐ Future Use 7 - ☐ Future Use 8 - ☐ Future Use
	610	Call Back / Recovery Window Duration: 2 digit entry Default: 05 minutes	

	611	Call Back Acknowledge code: 6-digit entry Default: 999999	
	612	Answering Machine Bypass: 2-digit entry Default: 00	
	613	Double Call Timer: 2-digit entry Default: 30	
	614	Number of Rings to Answer: 2-digit entry Default: 00	
	615	Audio Duration: 2-digit entry Default: 90	
	616	Record Time: 3-digit entry Default: 105	
	617	Erase Time: 2-digit entry Default: 15 minutes	
	620	Audio Station Tamper Option 1:	1 - □ Audio Station 1 Tamper 2 - □ Audio Station 2 Tamper 3 - □ Audio Station 3 Tamper 4 - □ Audio Station 4 Tamper 5 - □ Future Use 6 - □ Future Use 7 - □ Future Use 8 - □ Future Use
	999	Reset Module Programming to Factory Defaults	999 installer code 999

Wireless Programming

[804] Wireless Programming See the HSM2HOSTx installation manual and wireless device installation sheets for detailed information.			
	000 – WLS Device Enrollment	Zones: (Selection)	Zone #:
			Zone Definition:
		(2-digit decimal)	Partition Assignment:
		(14 x 2)	Zone Label:
	This section is an overview of wireless device programming. See the associated device installation sheets and the HSM2HOST/RFK keypad installation instructions for detailed worksheets	WLS Keys (Selection)	WLS Key #:
		(2-digit decimal)	Partition Assignment:
		(Selection)	Select User:
			WLS Key Label:
		Sirens (Selection)	Siren #:

		(2-digit decimal)	Partition Assignment:
		(14 x 1)	Siren Label:
		Keypads (2-digit decimal)	Keypad #:
		(2-digit decimal)	Partition Assignment:
			Keypad Label:
		Repeaters (Selection)	Repeater #:
			Repeater Label:
	001- 128 Configure Wireless Zones 1 to 128		
	551-556 Configure Wireless Sirens 1-16		
	601-632 Configure Wireless Keys 1-32		
	701-716 Configure Wireless Keypads		
	801-810 Wireless Options		
	841 Visual Verification Programming		
	901-905 Delete Wireless Devices		
	921-925 Replace Wireless Devices		
	990 Show All Devices		
	999 Reset Devices to Factory Default		

Alternate Communicators

[850] Cellular Signal Strength (Description on [850] Cellular Signal Strength)
[851] Alternate Communicator Programming Refer to the installation instructions provided with the alternate communicator for details.

Keypad Programming

[860] Display Keypad Slot Number (Description on [860] Display Keypad Slot Number)			
[861]-[876] Keypad Programming Refer to the installation instructions provided with the keypad for details.			
	000 – Keypad Partition Mask	00 – Global	
		01 – ☑ Partition 1	05 – □ Partition 5
		02 – □ Partition 2	06 – □ Partition 6
		03 – □ Partition 3	07 – □ Partition 7
		04 – □ Partition 4	08 – □ Partition 8
	001 – Function Key 1 (Default: 0300):		
	002 – Function Key 2 (Default: 0400):		
	003 – Function Key 3 (Default: 06):		
	004 – Function Key 4 (Default: 22):		
	005 – Function Key 5 (Default: 1600):		
	Function Key Programming Options:	**Function Key Programming Options:**	

	00 - Null Key 02 - Instant Stay Arm 03 - Stay Arm 04 - Away Arm 05 - [*][9]No Entry Arm 06 - Chime On/Off 07 - System Test 09 - Night Arm 12 - Global Stay Arm 13 - Global Away Arm 14 - Global Disarming 16 - Quick Exit	17 - Arm Interior 21 - Command Output 1 22 - Command Output 2 23 - Command Output 3 24 - Command Output 4 29 - Bypass Group Recall 31 - Local PGM Active 32 - Bypass Mode 33 - Bypass Recall 34 - User Programming 35 - User Functions	37 - Time/Date Programming 39 - Trouble Display 40 - Alarm Memory 61 - Partition Select 1 62 - Partition Select 2 63 - Partition Select 3 64 - Partition Select 4 65 - Partition Select 5 66 - Partition Select 6 67 - Partition Select 7 68 - Partition Select 8
	011 – Keypad I/O (Zone number or output number; 3-digit decimal; Default: 000):		
	012 – Local PGM Output Timer	Pulse Time Minutes (Default: 00 minutes)	
		Pulse Time Seconds (Default: 05 seconds)	
	021 – Keypad Option 1 For systems compliant with EN50131-1 and EN50131-3 Section [021]: options 1 and 2 must be OFF. 2-digit decimal	1 – ☑ [F] Key Enabled	
		2 – ☑ ☑ [M] Key Enabled	
		3 – ☑ ☑ [P] Key Enabled	
		4 – ☑ Display Code or X's	
	022 – Keypad Option 2	1 – ☑ Local Clock Display	
		2 – ☐ Local Clock 24-Hour	
		3 – ☑ Auto Alarm Scroll	
		5 – ☐ Power LED	
		6 – ☑ Power LED AC Present	
		7 – ☑ Alarms Displayed While Armed	
		8 – ☑ Auto Scroll Open Zones	
	023 – Keypad Option 3	1 – ☐ Armed LED Power Save	
		2 – ☑ Keypad Status Shows Arm Mode	
		3 – ☐ 5th Terminal is PGM Output/Zone Input	
		4 – ☐ Prox Tag Arm/Disarm	
		7 – ☐ Local Display of Temperature	
		8 – ☐ Low Temperature Warning	
	030 – LCD Message: (/TycoIS FOCUS/)		
	031 – Downloaded LCD Message Duration (3-digit decimal; 000-255; Default: 000):		
	041 – Indoor Temperature Zone Entry (3-digit decimal; 000-128; Default: 000):		
	042 – Outdoor Temperature Zone Entry (3-digit decimal; 000-128; Default: 000):		
	101-228 – Door Chime Sound:	00 – ☐ Disabled	
		01 – ☑ 6 Beeps	
		02 – ☐ Bing Bong	
		03 – ☐ Ding Dong	

		04 – □ Alarm Tone
		05 – □ Zone Name
	Door Chime Zone Assignment: 1 ___ 13 ___ 25 ___ 37 ___ 49 ___ 61 ___ 73 ___ 85 ___ 97 ___ 109 ___ 121 ___ 2 ___ 14 ___ 26 ___ 38 ___ 50 ___ 62 ___ 74 ___ 86 ___ 98 ___ 110 ___ 122 ___ 3 ___ 15 ___ 27 ___ 39 ___ 51 ___ 63 ___ 75 ___ 87 ___ 99 ___ 111 ___ 123 ___ 4 ___ 16 ___ 28 ___ 40 ___ 52 ___ 64 ___ 76 ___ 88 ___ 100 ___ 112 ___ 124 ___ 5 ___ 17 ___ 29 ___ 41 ___ 53 ___ 65 ___ 77 ___ 89 ___ 101 ___ 113 ___ 125 ___ 6 ___ 18 ___ 30 ___ 42 ___ 54 ___ 66 ___ 78 ___ 90 ___ 102 ___ 114 ___ 126 ___ 7 ___ 19 ___ 31 ___ 43 ___ 55 ___ 67 ___ 79 ___ 91 ___ 103 ___ 115 ___ 127 ___ 8 ___ 20 ___ 32 ___ 44 ___ 56 ___ 68 ___ 80 ___ 92 ___ 104 ___ 116 ___ 128 ___ 9 ___ 21 ___ 33 ___ 45 ___ 57 ___ 69 ___ 81 ___ 93 ___ 105 ___ 117 ___ 10 ___ 22 ___ 34 ___ 46 ___ 58 ___ 70 ___ 82 ___ 94 ___ 106 ___ 118 ___ 11 ___ 23 ___ 35 ___ 47 ___ 59 ___ 71 ___ 83 ___ 95 ___ 107 ___ 119 ___ 12 ___ 24 ___ 36 ___ 48 ___ 60 ___ 72 ___ 84 ___ 96 ___ 108 ___ 120 ___	

Template Programming

[899] Template Programming		
		5 Digit Template Code:
		Central Station Phone Number:
	Description on Template Programming	Central Station Account Code:
		Partition Account Code:
		DLS Access Code:
		Partition 1 Entry Delay 1:
		Partition 1 Exit Delay:
		Installer Code:

System information

□ [F] FIRE

□ [M] MEDICAL

□ [P] PANIC

The Exit Delay Time is _____ seconds.

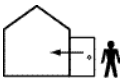 The Entry Delay Time is _____ seconds.

Module Programming

[902]	Add/Remove Modules	
	Description on [902] Add/Remove Modules	000 – Auto Enroll Modules
		001 – Enroll Modules
		002 – Slot Assignment

		003 – Edit Module Slot Assignment
		101 – Delete Keypads
		102 – Delete HSM2108 8 Zone Module
		103 – Delete HSM2208 8 Output Module or High Current O/P
		106 – Delete HSM2Host
		108 – Delete HSM2955
		109 – Delete HSM2300 Power Supply 1A
		110 – Delete HSM2204 4 High Current Output
[903]	Confirm Modules	
		000 – View All Modules
	Description on [903] Confirm Module	001 – View Keypads*
		002 – View HSM2108 8 Zone Module*
	*LED and ICON keypads	003 – View HSM2208 8 Output Module O/P*
		006 – View HSM2Host*
		009 – View HSM2300 Power Supply 1A*
		010 – View HSM2204 4 High Current Output*
	Description on [903] Confirm Module	101 – Confirm Keypads
		102 – ConfirmHSM2108 8 Zone Module
		103 – Confirm HSM2208 8 Output Module or High Current O/P
		106 – Confirm HSM2Host
		108 – Confirm HSM2955
		109 – Confirm HSM2300 Power Supply 1A
		110 – Confirm HSM2204 4 High Current Output

Wireless Placement Testing

Testing

[904] Wireless Placement Test Description on [904] Wireless Placement Test	
	001-128 – Placement Test - Zone 1-128
	521-528 – Placement Test Repeaters 1-8
	551-566 – Placement Test Sirens 1-16
	601-632 – Placement Test Wireless Keys 1-32
	701-716 – Placement Test Wireless Keypads 1-16
[912] Zone Soak Test Description on [912] Soak Test	
	000 – Zone Soak Test Duration (3-digit decimal; 001-255 Days; Default: 014):
	001 – Zone Soak Test Assignment - Zones 1-8
	002 – Zone Soak Test Assignment - Zones 9-16
	003 – Zone Soak Test Assignment - Zones 17-24
	004 – Zone Soak Test Assignment - Zones 25-32
	005 – Zone Soak Test Assignment - Zones 33-40
	006 – Zone Soak Test Assignment - Zones 41-48
	007 – Zone Soak Test Assignment - Zones 49-56
	008 – Zone Soak Test Assignment - Zones 57-64
	009 – Zone Soak Test Assignment - Zones 65-72
	010 – Zone Soak Test Assignment - Zones 73-80
	011 – Zone Soak Test Assignment - Zones 81-88
	012 – Zone Soak Test Assignment - Zones 89-96
	013 – Zone Soak Test Assignment - Zones 97-104
	014 – Zone Soak Test Assignment - Zones 105-112
	015 – Zone Soak Test Assignment - Zones 113-120
	016 – Zone Soak Test Assignment - Zones 121-128

Battery Settings

[982] Battery Settings Description on [982] Battery Settings			
	000 – Panel Battery Settings	01 –	□ Panel High Charge Current
	010 – HSM2204 High Current Output Battery	01 –	□ HSM2204 1 High Charge Current
		02 –	o HSM2204 2 High Charge Current
		03 –	□ HSM2204 3 High Charge Current
		04 –	□ HSM2204 4 High Charge Current
	020 – HSM2300 1A Power Supply Battery	01 –	□ HSM2300 1 High Charge Current
		02 –	□ HSM2300 2 High Charge Current
		03 –	□ HSM2300 3 High Charge Current
		04 –	□ HSM2300 4 High Charge Current

Restoring Factory Defaults

[989] Default Master Code		
[990] Installer Lockout Enable/Disable		
[991] Default Keypads		
		999 – Default All Keypads
		901-916 – Default Keypad 1-16
[993] Default Alt Comm		
[996] Default HSM2HOST Wireless Receiver		
[988] Default HSM2955		
[999] Default System (Descriptions on [989] Default Master Code)		

Programming Worksheets

Troubleshooting

Testing

- Power up system
- Program options as required (see)
- Manually trip then restore zones

- Verify correct reporting codes are sent to the central station

Troubleshooting

LCD programmable-message keypad:

- Press [*][2] followed by access code if required to view a trouble condition
- The trouble light flashes and the LCD displays the first trouble condition
- Use the arrow keys to scroll through all trouble conditions present on the system

ⓘ **Note:** When additional information is available for a specific trouble condition, a [*] is displayed. Press the [*] key to view the additional information.

[*][2] Trouble summary

The list below describes the trouble indications displayed on keypads.

Trouble	Detailed trouble	
01 – Service Required	01 – Bell circuit 02 – RF jam detected 03 – Loss of clock 04 – Output 1 fault 05 – Warm start	06 – USB Wi-Fi Connected 07 – Power Unit Fail (System) 08 – Power Unit Failure (HSM3204CX Corbus Repeater) 09 – Power Unit Failure (HSM3350 3 A Power Supply) 10 – Overcurrent
02 – Module Low Battery	01 – Panel low battery 02 – Panel no battery 04 – HSM2204 1-4 low battery 05 – HSM2204 1-4 no battery 07 – HSM2300 1-4 low battery 08 – HSM2300 1-4 no battery	10 – HSM3204CX low battery 11 – HSM3204CX no battery 13 – HSM3350 low battery 1 14 – HSM3350 low battery 2 15 – HSM3350 no battery 1 16 – HSM3350 no battery 2
03 – Bus Voltage	01 – HSM2HOSTx voltage 02 – Keypad 1-32 voltage 04 – HSM2108 1-15 voltage 05 – HSM2300 1-4 voltage 06 – HSM2204 1-4 voltage 07 – Panel Corbus Output Fault (system)	08 – HSM2208 1-4 voltage 09 – HSM2955 1-4 voltage 10 – HSM3408 voltage 11 – HSM3204CX bus low voltage 12 – HSM3204CX bus fault 13 – HSM3350 bus low voltage
04 – AC Troubles	01 – Zone 1-248 AC 02 - Keypad AC Trouble 03 – Siren 1-16 AC 04 – Repeater 1-8 AC 05 – HSM2300 1-4 AC	06 – HSM2204 1-4 AC 07 – Alarm controller AC 08 – HSM3204CX AC 09 – HSM3350 AC
05 – Device Faults	01 – Zone 001 - 248 03 – Siren 1-16 04 – Repeater 1-8 06 – Device mask	08 – Heat trouble 09 – CO trouble 10 – Freeze trouble 11– Probe disconn. 12– Fire trouble
06 – Device Low Battery	01 – Zone 1-248 02 – Keypad 1-32 03 – Siren 1-16	04 – Repeater 1-8 05 – User 1-32
07 – Device Tampers	01 – Zone 1-248 03 – Siren 1-16	04 – Repeater 1-8 05 – Audio Station 01 - 04
08 – RF Delinquency	01 – Zone 1-248 02 – Keypad 1-32	03 – Siren 1-16 04 – Repeater 1-8

Trouble	Detailed trouble	
09 – Module Supervisory	01 – HSM2HOSTx 02 – Keypad 1-32 04 – HSM2108 1-30 05 – HSM2300 1-4 06 – HSM2204	08 – HSM2208 1-4 09 – HSM2955 11 – HSM3408 12 – HSM3204CX 13 – HSM3350
10 – Module Tamper	01 – HSM2HOSTx 02 – Keypad 1-32 04 – HSM2108 1-30 05 – HSM2300 1-4 06 – HSM2204	08 – HSM2208 1-4 09 – HSM2955 11 – HSM3408 1-30 12 – HSM3204CX 13 – HSM3350
11 – Communications	01 – TLM 02 – FTC Receiver 1-4 04 – Alt. comm cellular 05 – Alt. comm Ethernet	06 – Receiver 1-4 absent 07 – Receiver 1-4 supervision 09 – Alt. comm fault 10 – Alt. comm FTCtrouble
12 – Not Networked	01 – Zone 1-248 02 – Keypad 1-32 03 – Siren 1-16	04 – Repeater 1-8 05 – User 1-32
13 – AUX Trouble	05 – HSM2300 06 – HSM2204 07 – System area	10 – HSM3408 11 – HSM3204CX 12 – HSM3350 AUX 1 trouble 13 – HSM3350 AUX 2 trouble
14 – Limit Exceeded Trouble	01 – Interactive Zone 02 – Interactive Partition	

Trouble [1] Service Required	Press [01] to determine specific trouble
Trouble	Troubleshooting
[01] Bell Circuit Bell+, Bell-.open circuit.	Disconnect Bell-/+ leads and measure resistance: Open circuit indicates break in wiring or defective siren/bell. Jumper Bell+/- with 1K resistor (Brown, Black, Red):
[02] RF Jam Detected Wireless receiver - excessive noise detected.	Check event buffer to determine specific trouble. If buffer logs RF jam, check for RF interference. Disable RF Jam: section [804] sub-section [801].
[03] Loss of clock The alarm controller internal clock is not set	To program the time and date: Enter [*][6][Master Code] then press [01]. Enter the time and date (24-hour clock) using the following format: HH:MM MM/DD/YY e.g.,. For 6:00 pm, June 29, 2019: Enter: [18] [00] [06] [29] [19]
[04] Output 1 Fault HSM2204 output #1 open circuit.	If output #1 is unused: ensure terminals O1, AUX are jumpered with 1K resistor (brown, black, red). If output #1 is used: disconnect wire leads from O1, AUX terminals, measure resistance of leads: Open circuit indicates a break in wiring.
[05] Warm Start Control panel has recovered from a software lockup	This trouble automatically restores after two minutes or when acknowledge via the [*] 2 menu. Contact Tech Support if this trouble persists or re-occurs periodically.
[06] USB Wi-Fi Connected HSM3WIFI USB to Wi-Fi Adapter is plugged into the panel	The trouble automatically clears once the HSM3WIFI adapter is unplugged from the panel. This trouble serves as a warning as to not to forget to unplug the adapter when configuration via Wi-Fi is completed.
[07] Power Unit Fail (System) A fault with the internal power supply has been detected on the panel.	Ensure the combined output power of the panel is not exceeding 2A. Power cycle the panel and if the trouble persists it may indicate a permanent hardware failure.

Trouble [1] Service Required	Press [01] to determine specific trouble
[08] Power Unit Failure (HSM3204CX) A fault with the internal power supply has been detected on the corbus repeater.	Ensure the combined output power of the corbus repeater module is not exceeding 2A. Power cycle the module and if the trouble persists it may indicate a permanent hardware failure.
[09] Power Unit Failure (HSM3350) A fault with the internal power supply has been detected on the 3A power supply.	Ensure the combined output power of the 3A power supply module is not exceeding 3A. Power cycle the module and if the trouble persists it may indicate a permanent hardware failure.
[10] Overcurrent The combined output power on the panel has exceeded 2A for a period of more than 5 minutes.	Reduce the load on the panel by re-powering modules or detectors with a separate power supply module.

Trouble [2] Module Battery Trouble	Press [02] to determine specific trouble
Trouble	Troubleshooting
[01] Panel Low Battery The panel detects that the battery is below the low battery threshold (less than 11.5VDC). **Note:** This trouble condition will not clear until the battery voltage is 12.5VDC min., under load. If battery is new allow 1 hour to charge.	Verify voltage measured across DC input terminals is 16-18 VAC. Replace HSM65W power supply adapter if required. Connect battery, remove AC power. Verify measured voltage across Aux terminals is 12.5VDC min. Replace battery if it is no longer able to hold a charge due to age.
[02] Panel No Battery The panel detects that no battery is present or that the battery is shorted.	Verify battery is connected. Ensure battery leads are connected with the right polarity. Connect battery, remove AC power. Verify measured voltage across Aux terminals is 12.5VDC min
[04] 4 High Current output 1-4 Low Battery (HSM2204) HSM2204 battery less than 11.5VDC. **Note:** This trouble condition will not clear until the battery voltage is 12.5VDC min. under load. Charge battery. It may be low due to a long period without AC.	Verify voltage measured across DC input terminals is 16-18 VDC. Replace HSM65W power supply adapter if required. Connect battery, remove AC power. Verify measured voltage across Aux terminals is 12.5VDC min. Replace battery if it is no longer able to hold a charge due to age.
[05] 4 High Current output 1-4 No Battery (HSM2204) Enter 05 to view which HSM2204 does not have a battery connected.	Verify battery is connected. Ensure battery leads are connected with the right polarity. Connect battery, remove AC power. Verify measured voltage across Aux terminals is 12.5VDC min
[07] Power Supply 1-4 Low Battery (HSM2300) Enter 07 to view which HSM2300 has a battery voltage less than 11.5V.	Verify voltage measured across DC input terminals is 16-18 VAC. Replace HSM65W power supply adapter if required. Connect battery, remove AC power. Verify measured voltage across Aux terminals is 12.5VDC min. Replace battery if it is no longer able to hold a charge due to age.
[08] Power Supply 1-4 No Battery (HSM2300) Enter 08 to view which HSM2300 does not have a battery connected.	Verify battery is connected. Ensure battery leads are connected with the right polarity. Connect battery, remove AC power. Verify measured voltage across Aux terminals is 12.5VDC min
[10] HSM3204CX low battery Enter 10 to view which HSM3204X has a battery voltage less than 11.5V	Verify voltage measured across DC input terminals is 16-18 VAC. Replace HSM65W power supply adapter if required. Connect battery, remove AC power. Verify measured voltage across Aux terminals is 12.5VDC min. Replace battery if it is no longer able to hold a charge due to age.

Trouble [2] Module Battery Trouble	Press [02] to determine specific trouble
[11] HSM3204CX no battery Enter 11 to view which HSM3204CX does not have a battery connected.	Verify voltage measured across DC input terminals is 16-18 VAC. Replace HSM65W power supply adapter if required. Connect battery, remove AC power. Verify measured voltage across Aux terminals is 12.5VDC min. Replace battery if it is no longer able to hold a charge due to age.
[13] HSM3350 low battery 1 Enter 13 to view which HSM3350 has a battery voltage less than 11.5V.	Verify voltage measured across DC input terminals is 16-18 VAC. Replace HSM65W power supply adapter if required. Connect battery, remove AC power. Verify measured voltage across Aux terminals is 12.5VDC min. Replace battery if it is no longer able to hold a charge due to age.
[14] HSM3350 low battery 2 Enter 14 to view which HSM3350 has a battery voltage less than 11.5V.	Verify voltage measured across DC input terminals is 16-18 VAC. Replace HSM65W power supply adapter if required. Connect battery, remove AC power. Verify measured voltage across Aux terminals is 12.5VDC min. Replace battery if it is no longer able to hold a charge due to age.
[15] HSM3350 no battery 1 Enter 15 to view which HSM3350 does not have a battery connected.	Verify battery is connected. Ensure battery leads are connected with the right polarity. Connect battery, remove AC power. Verify measured voltage across Aux terminals is 12.5VDC min
[16] HSM3350 no battery 2 Enter 16 to view which HSM3350 does not have a battery connected	Verify battery is connected. Ensure battery leads are connected with the right polarity. Connect battery, remove AC power. Verify measured voltage across Aux terminals is 12.5VDC min

Trouble [3] Bus Voltage Trouble	Press [03] to determine specific trouble
Trouble	Troubleshooting
[01] HSM2HOST Bus Low Voltage The 2-way wireless integration module has detected a voltage less than 6.3V on its aux input.	Ensure voltage at module is higher than the documented limits. Ensure wire run is not too long. Check voltage of panel battery. Trouble should clear when AC is re-applied and the battery has had time to charge. Disconnect AC and allow the panel to run on battery power. Ensure voltage at module is higher than the documented limits. Ensure that the corbus is not being overloaded or that there is no short anywhere on the wire run.
[02] Keypad 1-32 Bus Low Voltage Enter 02 to view hardwired keypads with a bus voltage of less than 6.9V for models that include a wireless transceiver, 7.7V for the models that do not.	
[04] HSM2108 Bus Low Voltage Enter 04 to view zone expanders with a bus voltage of less than 5.9V.	
[05] HSM2300 Bus Low Voltage Enter 05 to view power supplies with a bus voltage of less than 6.9V.	
[06] HSM2204 Bus Low Voltage Enter 06 to view high current output modules that have detected a bus voltage of less than 6.9V.	
[07] Panel Corbus Fault The panel has detected that its corbus output voltage is less than 9.0V or higher than 15V	
[08] HSM2208 Bus Low Voltage The low current output module has detected a voltage less than 5.9V on its aux input.	
[09] HSM2955 Bus Low Voltage The audio module has detected a voltage less than 9.65V on its aux input.	
[10] HSM3408 voltage The audio module has detected a voltage less than 6.4V on its aux input.	
[11] HSM3204CX bus low voltage The audio module has detected a voltage less than 6.0V on its aux input.	
[12] HSM3204CX bus fault Enter 12 to view corbus repeaters which have detected the voltage on the corbus output is less than 9.0V	
[13] HSM3350 bus low voltage Enter 12 to view corbus repeaters which have detected the voltage on the corbus output is less than 6.0V	

Trouble [4] AC Failure	Press [04] to determine specific trouble
Trouble	Troubleshooting
[01] Zone 1-248 AC [03] Siren 1-16 AC [04] Repeater 1-8 AC [05] HSM2300 1-4 AC [06] HSM2204 1-4 AC [07] Alarm Controller [08] HSM3204CX AC [09] HSM3350 AC An AC trouble has been detected on a device or module.	Verify voltage measured across DC input terminals is 16-20VDC. Replace HSM65W power adapter if required. For the HSM2204 or HSM2300 modules, ensure a 40VA 16.5VAC transformer is being used. Terminal voltage should be 16-17VAC. Replace transformer if required.

Trouble [05] Device Faults	Press [05] to determine specific trouble
Trouble	Troubleshooting
Fire Trouble: When a Fire Trouble is generated at the [05] Device faults ie Device Faults > Fire Trouble	Ensure that, if the PGM-2 is configured as 2-wire smoke detector and not used, 5.6K EOL resistor is used.
[01] Zone 1-248 faults Wireless zones: Enter [01] to view zones in fault. This trouble is generated by a zone wireless supervisory trouble.	Ensure fire zones have a 5.6K resistor (green, blue, red) connected. Remove wire leads from Z and COM terminals and measure resistance of the wire leads: Check for a short on DEOL zones or an open condition on SEOL fire zones. Connect a 5.6K resistor across the Z and COM terminals. Verify the trouble condition clears. Placement test a wireless device and re-locate it if bad results are received.
Hardwired zones: This trouble is generated by a short on hardwired zones when DEOL or TEOL is used.	
[03] Siren 1-16 faults This trouble is caused by a wireless supervisory fault on a wireless siren.	Placement test the wireless siren and re-locate if needed.
[04] Repeater 1-8 faults This trouble is caused by a wireless supervisory fault on a wireless repeater, or by the repeater shutting down due to a loss of AC/DC power.	Placement test the wireless repeater and re-locate if needed.
[06] Device mask Enter [06] to view the zone label in masking condition. A zone programmed as 24H Anti- Masking or a wireless device has detected a masking condition with one of its sensors.	Refer to the device manual to troubleshoot conditions that may cause masking detection for that devices sensors.
[08] Heat trouble Enter 10 to view the wireless zone which is detecting low temperature.	Move the device to a location with room temperature and ensure the trouble clears. If not check the programming threshold for high temperature for the zone.
[09] CO trouble Enter 09 to view the zone of a CO wireless device that is in low sensitivity trouble.	Refer to the CO devices manual for troubleshooting steps for low sensitivity trouble.

Trouble [05] Device Faults	Press [05] to determine specific trouble
[10] Freeze trouble Enter 08 to view the wireless zone which is detecting high temperature.	Move the device to a location with room temperature and ensure the trouble clears. If not check the programming threshold for low temperature for the zone.
[11] Probe disconnect Enter [11] to view the wireless zone which has detected a disconnected probe.	Refer to the temperature or flood detectors manual for troubleshooting steps for probe disconnected.
[12] Fire trouble Enter [012] to view which zones are in Fire trouble.	If fire zone is a wireless smoke, ensure it is not tampered, or in supervisory trouble. Ensure the smoke chamber is cleared of dust. If a 2-wire smoke is used, ensure a 2.2K EOL resistor is used. If zone is a 4-wire smoke, ensure a 5.6K EOL resistor is used.

Trouble [6] Device Low Battery	Press [06] to toggle through specific devices with low battery trouble
Trouble	Troubleshooting
[01] Zones 1-248 [02] Keypad 1-32 [03] Siren 1-16 [04] Repeater 1-8 [05] User 1-32 One or more wireless devices has a low battery. **Note:** The event is not logged to the event buffer until the wireless device low battery delay time expires. Programming section [377], Opt 002.	View which device is in low battery through the [*][2] menu. Replace the batteries in the device with same battery type. Verify that tamper and low battery condition is cleared and reported. Verify zone operation.

Trouble [7] Device Tamper	Press [07] to determine specific trouble
Trouble	Troubleshooting
[01] Zone 1-248 tampers [02] Keypad 1-32 tampers [03] Siren 1-16 tampers [04] Repeater 1-8 tampers [05] Audio Station 1-4 tampers An open circuit is present on one or more zones with DEOL or TEOL resistors enabled.	Check that the tamper switch is securely attached to the wall. Remove the wire leads from I/O and COM and measure the resistance of the wire leads. Connect a 5.6K resistor (Green, Blue, Red) across the I/O and COM terminals. Verify the trouble condition clears.
A tamper condition is present on one or more wireless devices.	Ensure device cover is secure. Ensure device is correctly mounted for wall tamper operation. Trip, then restore the tamper. If tamper condition persists, replace wireless device.

Trouble [8] RF Delinquency	Press [08] to determine specific trouble
Trouble	Troubleshooting
[01] Zone 1-248 faults [02] Keypad 1-32 faults [03] Siren 1-16 faults [04] Repeater 1-8 faults HSM2HOST has not received a supervisory signal from a wireless device for 20 minutes.	Open/close the device, press a key on the keypad or tamper/restore. Ensure the device is physically present. Check for device faults (e.g., low battery). Check the current signal strength and during the last 24 hours. Replace the battery. Replace the device.

Trouble [9] Module Supervisory	Press [09] to determine specific zones with a tamper trouble
Trouble	Troubleshooting
[01] HSM2HOST [02] Keypad 1-30 [04] HSM2108 1-15 [05] HSM2300 1-4 [06] HSM2204 1-4 [08] HSM2208 1-4 [09] HSM2955 [10] HSM3408 1-30 [11] HSM3204CX 1-16 [12] HSM3350 1-4 No supervisory response from enrolled module.	Ensure the module is physically connected to the corbus. Measure power across corbus Red and Blk directly on the module and ensure it is at 10.5V (min). Disconnect the module and using a short length of wire, connect it directly at the panel. If the trouble then clears, it indicates a wiring problem. If the trouble does not clear, replace the module. If the module is no longer part of the system, delete it via section [902].

Trouble [10] Module Tamper	Press [10] to determine specific trouble
Trouble	Troubleshooting
[01] HSM2HOST [02] Keypad 1-32 [04] HSM2108 1-30 [05] HSM2300 1-4 [06] HSM2204 1-4 [08] HSM2208 1-4 [09] HSM2955 [10] Alt. comm. [11] HSM3408 1-30 [12] HSM3204CX 1-16 [13] HSM3350 1-4 A tamper condition is present on one or more modules.	Ensure the TAM terminal, if present on the modules is shorted to ground if tamper support is not used. Ensure module cabinet cover is securely closed and properly activating the tamper switch, if present. Ensure that the rubber tamper plunger is installed on the keypad back plastics and that the keypad is securely closed and fastened to the wall. For the HSM2HOST, ensure the module is securely closed and correctly mounted for wall tamper operation. Manually trip, then restore the tamper. If tamper condition persists, replace the module.

Trouble [11] Communications	Press [11] to determine specific trouble
Trouble	Troubleshooting
[01] Phone Line Trouble Phone line voltage at TIP, RING on main panel less than 3VDC.	Measure the voltage across TIP and RING on the panel: No phone off-hook – 50VDC (approx). Any phone off-hook – 5VDC (approx). Wire incoming line directly to TIP and RING. If trouble clears, check wiring or the RJ-31 phone jack. If not using a phone line on the panel, disable it in section [015] option 7.
[02] FTC Receiver 1-4 The system failed to communicate with a receiver using one of the enabled phone numbers. Enter [02] to view phone numbers with failure to communicate troubles.	If using PSTN communications, ensure the central station phone number is programmed correctly. If using IP or cellular, ensure alternate communicator has the correct central station IP and port numbers, as well as APN for cellular.
[03] Alternate Comm SIM Lock SIM lock is enabled and the unit does not have the correct SIM PIN.	Replace SIM card with one that does not have a SIM lock pin code programed.

Trouble [11] Communications	Press [11] to determine specific trouble
[04] Alternate Comm Cellular The alternate communicator has detected a radio or SIM failure, a cellular network trouble, or insufficient signal strength.	Check the the event buffer for trouble details. For radio/SIM failure, ensure the cellular plug-in module is connected to the panel properly and that the SIM card is correctly inserted in the right orientation. For Cellular Network trouble ensure the correct Cellular APN is programmed and that the SIM card is activated. For insufficient signal strength, sure the antenna is properly connected and the unit is mounted in a location which allows for a strong signal to the nearest cellular tower.
[05] Alternate Comm Ethernet The alternate communicator has detected a network absent condition.	Check with the ISP to confirm Internet service is active in the area. Ensure the Ethernet cable is securely inserted into the RJ45 jack of the communicator and the hub/router/switch. Check the link light on the hub/router/switch is ON. If link light is OFF, start the hub/router/switch. If DHCP is used, ensure that the unit has an assigned IP address from the server. In Section [851] [992] verify a valid IP address is programmed. If not, contact the network administrator. If problem persists, replace the Ethernet cable and RJ45 connector
[06] Receiver 1-4 Trouble Alternate communicator is failing to initialize to the receiver.	Ensure that the Ethernet path has Internet connectivity. If using a static IP address, confirm that the gateway and subnet mask are entered correctly. If the network has a firewall, ensure the network has the programmed outgoing ports open (default UDP port 3060 and port 3065). Ensure that all cellular receiver APNs have been programmed with the access point name provided by the cellular provider. If Common Mode is used, and only one path is initiliazed while the other path is not successful, generate a manual test transmission over both paths or power cycle the communicator to recover the "Receiver Not Available" trouble.
[07] Receiver 1-4 Supervision The alarm system loses communication with an Ethernet or cellular receiver on the system.	This trouble is indicated when supervision is enabled and the unit is not able to successfully communicate with the receiver. If this trouble persists, contact the central station.
[09] Alternate Comm Fault The alternate communicator has not responded to any poll commands. Alt Comm Fault is displayed in [*][2] and the event buffer.	Check section [382] toggle option [5] is ON if using an Alarm.com alternate communicator. If not, it should be OFF. Ensure the PC-LINK cable between the panel and Alarm.com communicator is connected properly (not reversed) and is securely in place.
[10] Alternate Comm FTC Fault	The unit has exhausted all communications attempts to all programmed receivers for events generated by the communicator. Restart the system and if trouble persists, contact the dealer.

Trouble [12] Not Networked	Press [12] to toggle through troubles
Trouble	Troubleshooting
[01] Zones 1-248 [02] Keypad 1-32 [03] Siren 1-16 [04] Repeater 1-8 [05] User 1-32 A device is out of sync with the wireless network or was not synchronized with the network after enrollment.	Ensure the device is physically present. Check the current signal strength and during the last 24 hours. Replace the battery or press the tamper switch. Enroll the device again. If wireless devices were recently enrolled, or the HSM2HOST was power cycled, wait up to 16 minutes for the device to synchronize to the network.

Trouble [13] AUX Trouble	Press [13] to toggle through troubles
Trouble	Troubleshooting
[05] HSM2300 [06] HSM2204 [07] System area [10] HSM3408 [11] HSM3204CX [12] HSM3350 AUX 1 trouble [13] HSM3350 AUX 2 trouble An auxiliary power supply trouble is present.	Check for a short between Aux+ and Aux- or other system ground. Ensure the aux current draw has not exceeded the documented limits. Ensure voltage between AUX+ and AUx - is between 9VDC to 14VDC.

Trouble [14] Module Tamper	Press [14] to determine specific trouble
Trouble	Troubleshooting
[01] Interactive Zone [02] Interactive Partition	Check the Alarm.com communicator firmware is compatible with PSP firmware to support extended number of Zones and Partitions. Interactive Zone trouble is generated when the Alarm.com firmware does not support the configured number of zones in panel (>220 Zones) and Interactive Partition Trouble is generated when the Alarm.com firmware does not support configured number of Partitions. Ensure to configure compatible number of zones and partitions while using with Alarm.com.

ⓘ **Note:** Ensure you have the alarm controller type and version (for example, HSM3032 V1.1) and the list of modules connected to control panel, (for example, HSM2108, HSM2HOSTx and so on) available before contacting Customer Support. Version number can be accessed by entering [*][Installer Code][900] on any LCD keypad. This information is also located on a sticker on the printed circuit board.

Reporting Codes

The following tables contain Contact ID and Automatic SIA format reporting codes. [308] Event Reporting for event reporting codes.

Contact ID

Each of the digits indicate specific information about the signal. For example, if zone 1 is an entry/exit point, the event code contains [34]. The central station would receive the following:

*BURG - ENTRY/EXIT - 1 where the “1” indicates which zone went into alarm.

Contact ID and SIA Zone Alarm/Restore Event Codes for code definitions.

SIA Format - Level 2 (Hard Coded)

The SIA communication format used in this product follows the level 2 specifications of the SIA Digital Communication Standard - October 1997. This format sends the account code along with its data transmission. The transmission appears similar to the following at the receiver:

N ri1 BA 01

N = New Event

ri1 = Partition /Area Identifier

BA = Burglary Alarm

01 = Zone 1

A system event uses the Area Identifier ri00.

Contact ID and SIA Zone Alarm/Restore Event Codes

Section #	Definition	Dialer Direction*	Automatic Contact ID Codes	SIA Auto Rep Codes**
Zone Events				
[307]	Zone Alarms	A/R	Contact ID & SIA Zone Alarm/Restore Event Codes (as per SIA DCS: 'Contact ID' 01-1999):" for details.	
[307]	Zone Restores	A/R		
[307]	Zone tamper/restore	MA/R	E(3)83-ZZZ / R(3)83-ZZZ	TA-ZZZ / TR-ZZZZ
[307]	Zone fault/restore	MA/R	E(3)8A-ZZZ / R(3)8A-ZZZ	UT-ZZZZ / UJ-ZZZZ
Tamper Events				
[308]-[101]	Keypad 1 tamper/ restore alarm	T/R	E(3)83-601 / R(3)83-601	TA-0601 / TR-0601
[308]-[101]	Keypad 2 tamper/ restore alarm	T/R	E(3)83-602 / R(3)83-602	TA-0602 / TR-0602
[308]-[101]	Keypad 3 tamper/ restore alarm	T/R	E(3)83-603 / R(3)83-603	TA-0603 / TR-0603
[308]-[101]	Keypad 4 tamper/ restore alarm	T/R	E(3)83-604 / R(3)83-604	TA-0604 / TR-0604
[308]-[101]	Keypad 5 tamper/ restore alarm	T/R	E(3)83-605 / R(3)83-605	TA-0605 / TR-0605
[308]-[101]	Keypad 6 tamper/ restore alarm	T/R	E(3)83-606 / R(3)83-606	TA-0606 / TR-0606
[308]-[101]	Keypad 7 tamper/ restore alarm	T/R	E(3)83-607 / R(3)83-607	TA-0607 / TR-0607
[308]-[101]	Keypad 8 tamper/ restore alarm	T/R	E(3)83-608 / R(3)83-608	TA-0608 / TR-0608
[308]-[101]	Keypad 9 tamper/ restore alarm	T/R	E(3)83-609 / R(3)83-609	TA-0609 / TR-0609
[308]-[101]	Keypad 10 tamper/ restore alarm	T/R	E(3)83-610 / R(3)83-610	TA-0610 / TR-0610
[308]-[101]	Keypad 11 tamper/ restore alarm	T/R	E(3)83-611 / R(3)83-611	TA-0611 / TR-0611
[308]-[101]	Keypad 12 tamper/ restore alarm	T/R	E(3)83-612 / R(3)83-612	TA-0612 / TR-0612
[308]-[101]	Keypad 13 tamper/ restore alarm	T/R	E(3)83-613 / R(3)83-613	TA-0613 / TR-0613
[308]-[101]	Keypad 14 tamper/ restore alarm	T/R	E(3)83-614 / R(3)83-614	TA-0614 / TR-0614
[308]-[101]	Keypad 15 tamper/ restore alarm	T/R	E(3)83-615 / R(3)83-615	TA-0615 / TR-0615
[308]-[101]	Keypad 16 tamper/ restore alarm	T/R	E(3)83-616 / R(3)83-616	TA-0616 / TR-0616
[308]-[101]	Siren 1 tamper/restore alarm	T/R	E (3)83-801 / R (3)83-801	TA-0801 / TR-0801
[308]-[101]	Siren 2 tamper/restore alarm	T/R	E(3)83-802 / R (3)83-802	TA-0802 / TR-0802
[308]-[101]	Siren 3 tamper/restore alarm	T/R	E(3)83-803 / R (3)83-803	TA-0803 / TR-0803
[308]-[101]	Siren 4 tamper/restore alarm	T/R	E (3)83-804 / R (3)83-804	TA-0804 / TR-0804
[308]-[101]	Siren 5 tamper/restore alarm	T/R	E(3)83-805 / R (3)83-805	TA-0805 / TR-0805
[308]-[101]	Siren 6 tamper/restore alarm	T/R	E(3)83-806 / R (3)83-806	TA-0806 / TR-0806
[308]-[101]	Siren 7 tamper/restore alarm	T/R	E(3)83-807 / R (3)83-807	TA-0807 / TR-0807

Section #	Definition	Dialer Direction*	Automatic Contact ID Codes	SIA Auto Rep Codes**
[308]-[101]	Siren 8 tamper/restore alarm	T/R	E(3)83-808 / R (3)83-808	TA-0808 / TR-0808
[308]-[101]	Siren 9 tamper/restore alarm	T/R	E(3)83-809 / R (3)83-809	TA-0809 / TR-0809
[308]-[101]	Siren 10 tamper/restore alarm	T/R	E (3)83-810 / R (3)83-810	TA-0810 / TR-0810
[308]-[101]	Siren 11 tamper/restore alarm	T/R	E(3)83-811 / R (3)83-811	TA-0811 / TR-0811
[308]-[101]	Siren 12 tamper/restore alarm	T/R	E (3)83-812 / R (3)83-812	TA-0812 / TR-0812
[308]-[101]	Siren 13 tamper/restore alarm	T/R	E(3)83-813 / R (3)83-813	TA-0813 / TR-0813
[308]-[101]	Siren 14 tamper/restore alarm	T/R	E (3)83-814 / R (3)83-814	TA-0814 / TR-0814
[308]-[101]	Siren 15 tamper/restore alarm	T/R	E(3)83-815 / R (3)83-815	TA-0815 / TR-0815
[308]-[101]	Siren 16 tamper/restore alarm	T/R	E (3)83-816 / R (3)83-816	TA-0816 / TR-0816
[308]-[101]	Repeater 1 tamper/ restore alarm	T/R	E(3)83-901 / R (3)83-901	TA-0901 / TR-0901
[308]-[101]	Repeater 2 tamper/ restore alarm	T/R	E(3)83-902 / R (3)83-902	TA-0902 / TR-0902
[308]-[101]	Repeater 3 tamper/ restore alarm	T/R	E(3)83-903 / R (3)83-903	TA-0903 / TR-0903
[308]-[101]	Repeater 4 tamper/ restore alarm	T/R	E(3)83-904 / R (3)83-904	TA-0904 / TR-0904
[308]-[101]	Repeater 5 tamper/ restore alarm	T/R	E(3)83-905 / R (3)83-905	TA-0905 / TR-0905
[308]-[101]	Repeater 6 tamper/ restore alarm	T/R	E(3)83-906 / R (3)83-906	TA-0906 / TR-0906
[308]-[101]	Repeater 7 tamper/ restore alarm	T/R	E(3)83-907 / R (3)83-907	TA-0907 / TR-0907
[308]-[101]	Repeater 8 tamper/ restore alarm	T/R	E(3)83-908 / R (3)83-908	TA-0908 / TR-0908
[308]-[101]	HSM2108: 8-Zone Expander module #1 tamper/restored	T/R	E(3)41-101 / R(3)41-101	ES-0101 / EJ-0101
[308]-[101]	HSM2108: 8-Zone Expander module #2 tamper/restored	T/R	E(3)41-102 / R(3)41-102	ES-0102 / EJ-0102
[308]-[101]	HSM2108: 8-Zone Expander module #3 tamper/restored	T/R	E(3)41-103 / R(3)41-103	ES-0103 / EJ-0103
[308]-[101]	HSM2108: 8-Zone Expander module #4 tamper/restored	T/R	E(3)41-104 / R(3)41-104	ES-0104 / EJ-0104
[308]-[101]	HSM2108: 8-Zone Expander module #5 tamper/restored	T/R	E(3)41-105 / R(3)41-105	ES-0105 / EJ-0105
[308]-[101]	HSM2108: 8-Zone Expander module #6 tamper/restored	T/R	E(3)41-106 / R(3)41-106	ES-0106 / EJ-0106
[308]-[101]	HSM2108: 8-Zone Expander module #7 tamper/restored	T/R	E(3)41-107 / R(3)41-107	ES-0107 / EJ-0107

Section #	Definition	Dialer Direction*	Automatic Contact ID Codes	SIA Auto Rep Codes**
[308]-[101]	HSM2108: 8-Zone Expander module #8 tamper/restored	T/R	E(3)41-108 / R(3)41-108	ES-0108 / EJ-0108
[308]-[101]	HSM2108: 8-Zone Expander module #9 tamper/restored	T/R	E(3)41-109 / R(3)41-109	ES-0109 / EJ-0109
[308]-[101]	HSM2108: 8-Zone Expander module #10 tamper/restored	T/R	E(3)41-110 / R(3)41-110	ES-0110 / EJ-0110
[308]-[101]	HSM2108: 8-Zone Expander module #11 tamper/restored	T/R	E(3)41-111 / R(3)41-111	ES-0111 / EJ-0111
[308]-[101]	HSM2108: 8-Zone Expander module #12 tamper/restored	T/R	E(3)41-112 / R(3)41-112	ES-0112 / EJ-0112
[308]-[101]	HSM2108: 8-Zone Expander module #13 tamper/restored	T/R	E(3)41-113 / R(3)41-113	ES-0113 / EJ-0113
[308]-[101]	HSM2108: 8-Zone Expander module #14 tamper/restored	T/R	E(3)41-114 / R(3)41-114	ES-0114 / EJ-0114
[308]-[101]	HSM2108: 8-Zone Expander module #15 tamper/restored	T/R	E(3)41-115 / R(3)41-115	ES-0115 / EJ-0115
[308]-[101]	HSM2208: 8-Output Expander module #1 tamper/restored	T/R	E(3)41-201 / R(3)41-201	ES-0201 / EJ-0201
[308]-[101]	HSM2208: 8-Output Expander module #2 tamper/restored	T/R	E(3)41-202 / R(3)41-202	ES-0202 / EJ-0202
[308]-[101]	HSM2208: 8-Output Expander module #3 tamper/restored	T/R	E(3)41-203 / R(3)41-203	ES-0203 / EJ-0203
[308]-[101]	HSM2208: 8-Output Expander module #4 tamper/restored	T/R	E(3)41-204 / R(3)41-204	ES-0204 / EJ-0204
[308]-[101]	HSM2208: 8-Output Expander module #5 tamper/restored	T/R	E(3)41-205 / R(3)41-205	ES-0205 / EJ-0205
[308]-[101]	HSM2208: 8-Output Expander module #6 tamper/restored	T/R	E(3)41-206 / R(3)41-206	ES-0206 / EJ-0206
[308]-[101]	HSM2208: 8-Output Expander module #7 tamper/restored	T/R	E(3)41-207 / R(3)41-207	ES-0207 / EJ-0207
[308]-[101]	HSM2208: 8-Output Expander module #8 tamper/restored	T/R	E(3)41-208 / R(3)41-208	ES-0208 / EJ-0208
[308]-[101]	HSM2208: 8-Output Expander module #9 tamper/restored	T/R	E(3)41-209 / R(3)41-209	ES-0209 / EJ-0209
[308]-[101]	HSM2208: 8-Output Expander module #10 tamper/restored	T/R	E(3)41-210 / R(3)41-210	ES-0210 / EJ-0210

Section #	Definition	Dialer Direction*	Automatic Contact ID Codes	SIA Auto Rep Codes**
[308]-[101]	HSM2208: 8-Output Expander module #11 tamper/restored	T/R	E(3)41-211 / R(3)41-211	ES-0211 / EJ-0211
[308]-[101]	HSM2208: 8-Output Expander module #12 tamper/restored	T/R	E(3)41-212 / R(3)41-212	ES-0212 / EJ-0212
[308]-[101]	HSM2208: 8-Output Expander module #13 tamper/restored	T/R	E(3)41-213 / R(3)41-213	ES-0213 / EJ-0213
[308]-[101]	HSM2208: 8-Output Expander module #14 tamper/restored	T/R	E(3)41-214 / R(3)41-214	ES-0214 / EJ-0214
[308]-[101]	HSM2208: 8-Output Expander module #15 tamper/restored	T/R	E(3)41-215 / R(3)41-215	ES-0215 / EJ-0215
[308]-[101]	HSM2208: 8-Output Expander module #16 tamper/restored	T/R	E(3)41-216 / R(3)41-216	ES-0216 / EJ-0216
[308]-[101]	HSM2204: Power Supply-1A (4 high-current outputs) #1 tamper/restored	T/R	E(3)41-601 / R(3)41-601	ES-0601 / EJ-0601
[308]-[101]	HSM2204: Power Supply-1A (4 high-current outputs) #2 tamper/restored	T/R	E(3)41-602 / R(3)41-602	ES-0602 / EJ-0602
[308]-[101]	HSM2204: Power Supply-1A (4 high-current outputs) #3 tamper/restored	T/R	E(3)41-603 / R(3)41-603	ES-0603 / EJ-0603
[308]-[101]	HSM2204: Power Supply-1A (4 high-current outputs) #4 tamper/restored	T/R	E(3)41-604 / R(3)41-604	ES-0604 / EJ-0604
[308]-[101]	HSM2300: Power Supply module #1 tamper/restored	T/R	E(3)41-621 / R(3)41-621	ES-0621 / EJ-0621
[308]-[101]	HSM2300: Power Supply module #2 tamper/restored	T/R	E(3)41-622 / R(3)41-622	ES-0622 / EJ-0622
[308]-[101]	HSM2300: Power Supply module #3 tamper/restored	T/R	E(3)41-623 / R(3)41-623	ES-0623 / EJ-0623
[308]-[101]	HSM2300: Power Supply module #4 tamper/restored	T/R	E(3)41-624 / R(3)41-624	ES-0624 / EJ-0624
[308]-[101]	HSM2955: Audio module tamper/restore	T/R	E(3)41-553 / R(3)41-553	ES-0553 / EJ-0553
[308]-[101]	Alternate Communicator Tamper (only on supported models)	T/R	E(3)41-950 / R(3)41-950	ES-0950 / EJ-0950
[308]-[101]	Keypad Lockout - Incorrect access code entry	T/R	E(4)61-000	JA-0000
Opening Events				

Section #	Definition	Dialer Direction*	Automatic Contact ID Codes	SIA Auto Rep Codes**
[308]-[201]	User Openings - Disarmed by user	O/C	E(4)A1-UUU	OP-UUUU
[308]-[202]	Automatic Arming Canceled	O/C	E(4)64-UUU	CI-0000
[308]-[201]	Special Opening - System disarmed using: keyswitch, maintenance code, DLS software, wireless key	O/C	E(4)AA-000	OP-0000
[308]-[211]	Late to Open - System not disarmed before late to open time expired	O/C	E(4)53-000	CT-0000
[308]-[202]	Automatic (Schedule) Opening	O/C	E(4)A3-000	OA-0000
[308]-[201]	Keyswitch Open	O/C	E(4)A9-ZZZ	OS-ZZZZ
Closing Events				
[308]-[201]	User Closings - System armed by user, wireless key	O/C	R(4)A1-UUU	CL-UUUU
[308]-[221]	Partial Closing - 1 or more zones bypassed when armed	O/C	E(4)56-000	CG-0000
[308]-[201]	Special Closing - System armed via: quick arm, keyswitch, function key, maintenance code, DLS software	O/C	R(4)AA-000	CL-0000
[308]-[211]	Late to Close - Auto-arm prealert sounded	O/C	E(4)54-000	CI-0000
[308]-[211]	Exit Fault	O/C	E(3)74-ZZZ	EA-ZZZZ
[308]-[202]	Automatic (Schedule) Closing	O/C	R (4)A3-000	CA-0000
[308]-[201]	Keyswitch Close	O/C	R(4)A9-ZZZ	CS-ZZZZ
System Trouble Events				
[308]-[301]	Battery trouble/restore - Main panel	MA/R	E(3)A2-000 / R(3)A2-000	YT-0000 / YR-0000
[308]-[301]	Battery absent trouble/ restore - Main panel	MA/R	E(3)11-000 / R(3)11-000	YM-0000 / YR-0000
[308]-[301]	Panel AC trouble/ restore - Main panel	MA/R	E(3)A1-000 / R(3)A1-000	AT-0000 / AR-0000
[308]-[302]	Bell Circuit trouble/ restore	MA/R	E(3)21-000 / R(3)21-000	YA-9999 / YH-9999
[308]-[302]	TLM (telephone line) fail/restore	MA/R	E(3)51-000 / R(3) 51-000	LT-0001 / LR-0001
[308]-[302]	Auxiliary Power trouble/ restore	MA/R	E(3) 12-000 / R(3) 12-000	YP-0000 / YQ-0000
[308]-[305]	PGM 2, 2-Wire Smoke trouble/restore	MA/R	E(3)73-992 / R(3)73-992	FT-0992 / FJ-0992
Module Troubles				
[308]-[332]	Hardwired Module Low Voltage trouble/restore - Keypads	MA/R	E(3)AA-001-016 R(3)AA-001-016	EM-0001-0016 EN-0001-0016
[308]-[332]	Hardwired Module Low Voltage trouble/restore - HSM2108	MA/R	E (3)AA-101-116 R (3)AA-101-116	EM-0101-0116 EN-0101-0116

Section #	Definition	Dialer Direction*	Automatic Contact ID Codes	SIA Auto Rep Codes**
[308]-[332]	Hardwired Module Low Voltage trouble/restore - HSM2208	MA/R	E(3)AA-201-216 R(3)AA-201-216	EM-0201-0216 EN-0201-0216
[308]-[332]	Hardwired Module Low Voltage trouble/restore - HSM2HOST	MA/R	E (3)AA-551 R (3)AA-551	EM-0551 EN-0551
[308]-[332]	Hardwired Module Low Voltage trouble/restore - HSM2204	MA/R	E(3)AA-601-604 R(3)AA-601-604	EM-0601-0604 EN-0601-0604
[308]-[332]	Hardwired Module Low Voltage trouble/restore - HSM2300	MA/R	E (3)AA-621-624 R (3)AA-621-624	EM-0621-0624 EN-0621-0624
[308]-[332]	Hardwired Module Low Voltage trouble/restore - HSM2955	MA/R	E(3)AA-553 R(3)AA-553	EM-0553 EN-0553
[308]-[332]	Hardwired Module Supervisory trouble/ restore - Keypads	MA/R	E(3)3A-001-016 R(3)3A-001-016	ET-0001-0032 ER-0001-0032
[308]-[332]	Hardwired Module Supervisory trouble/ restore - HSM2108	MA/R	E (3)3A-101-116 R (3)3A-101-116	ET-0101-0162 ER-0101-0162
[308]-[332]	Hardwired Module Supervisory trouble/ restore - HSM2208	MA/R	E(3)3A-201-216 R(3)3A-201-216	ET-0201-0216 ER-0201-0216
[308]-[332]	Hardwired Module Supervisory trouble/ restore - HSM2HOST	MA/R	E(3)3A-551 R(3)3A-551	ET-0551 ER-0551
[308]-[332]	Hardwired Module Supervisory trouble/ restore - HSM2204	MA/R	E (3)3A-601-604 R (3)3A-601-604	ET-0601-0601 ER-0601-0604
[308]-[332]	Hardwired Module Supervisory trouble/ restore - HSM2300	MA/R	E(3)3A-621-624 R(3)3A-621-624	ET-0621-0624 ER-0621-0624
[308]-[332]	Hardwired Module Supervisory trouble/ restore - HSM2955	MA/R	E(3)3A-553 R(3)3A-553	ET-0553 ER-0553
[308]-[332]	HSM2204 Aux Supply 1 trouble/restore	MA/R	E(3)12-601 R(3)12-601	YI-0601 / YJ-0601
[308]-[332]	HSM2204 Aux Supply 2 trouble/restore	MA/R	E(3)12-602 R(3)12-602	YI-0602 / YJ-0602
[308]-[332]	HSM2204 Aux Supply 3 trouble/restore	MA/R	E(3)12-603 R(3)12-603	YI-0603 / YJ-0603
[308]-[332]	HSM2204 Aux Supply 4 trouble/restore	MA/R	E(3)12-604 R(3)12-604	YI-0604 / YJ-0604
[308]-[332]	HSM2300 Aux Supply 1 trouble/restore	MA/R	E(3)12-621 R(3)12-621	YI-0621 / YJ-0621
[308]-[332]	HSM2300 Aux Supply 2 trouble/restore	MA/R	E(3)12-622 R(3)12-622	YI-0622 / YJ-0622
[308]-[332]	HSM2300 Aux Supply 3 trouble/restore	MA/R	E(3)12-623 R(3)12-623	YI-0623 / YJ-0623
[308]-[332]	HSM2300 Aux Supply 4 trouble/restore	MA/R	E(3)12-624 R(3)12-624	YI-0624 / YJ-0624
[308]-[332]	HSM2204 1 Low Battery trouble/restore	MA/R	E(3)A2-601 R(3)A2-601	YT-0601 / YR-0601

Section #	Definition	Dialer Direction*	Automatic Contact ID Codes	SIA Auto Rep Codes**
[308]-[332]	HSM2204 2 Low Battery trouble/restore	MA/R	E(3)A2-602 R(3)A2-602	YT-0602 / YR-0602
[308]-[332]	HSM2204 3 Low Battery trouble/restore	MA/R	E(3)A2-603 R(3)A2-603	YT-0603 / YR-0603
[308]-[332]	HSM2204 4 Low Battery trouble/restore	MA/R	E(3)A2-604 R(3)A2-604	YT-0604 / YR-0604
[308]-[332]	HSM2300 1 Low Battery trouble/restore	MA/R	E(3)A2-621 R(3)A2-621	YT-0621 / YR-0621
[308]-[332]	HSM2300 2 Low Battery trouble/restore	MA/R	E(3)A2-622 R(3)A2-622	YT-0622 / YR-0622
[308]-[332]	HSM2300 3 Low Battery trouble/restore	MA/R	E(3)A2-623 R(3)A2-623	YT-0623 / YR-0623
[308]-[332]	HSM2300 4 Low Battery trouble/restore	MA/R	E(3)A2-624 R(3)A2-624	YT-0624 / YR-0624
[308]-[332]	HSM2204 1 Battery absent trouble/restore	MA/R	E(3)11-601 R(3)11-601	YM-0601 / YR-0601
[308]-[332]	HSM2204 2 Battery absent trouble/restore	MA/R	E(3)11-602 R(3)11-602	YM-0602 / YR-0602
[308]-[332]	HSM2204 3 Battery absent trouble/restore	MA/R	E(3)11-603 R(3)11-603	YM-0603 / YR-0603
[308]-[332]	HSM2204 4 Battery absent trouble/restore	MA/R	E(3)11-604 R(3)11-604	YM-0604 / YR-0604
[308]-[332]	HSM2300 1 Battery absent trouble/restore	MA/R	E(3)11-621 R(3)11-621	YM-0621 / YJ-0621
[308]-[332]	HSM2300 2 Battery absent trouble/restore	MA/R	E(3)11-622 R(3)11-622	YM-0622 / YJ-0622
[308]-[332]	HSM2300 3 Battery absent trouble/restore	MA/R	E(3)11-623 R(3)11-623	YM-0623 / YJ-0623
[308]-[332]	HSM2300 4 Battery absent trouble/restore	MA/R	E(3)11-624 R(3)11-624	YM-0624 / YJ-0624
Alternate Communicator				
[308]-[351]	Alternate Communicator fault/ restore	MA/R	E(3)3A-000 R(3)3A-000	ET-0000 / ER-0000
[308]-[351]	Alternate Communicator Radio/ SIM failure/restore	MA/R	E(3)AA-991 R(3)AA-991	YX-0991 / YZ-0991
[308]-[351]	Alternate Communicator cellular trouble/restore	MA/R	E(3)AA-992 R(3)AA-992	YX-0992 / YZ-0992
[308]-[352]	Alternate Communicator Ethernet trouble/restore	MA/R	E(3)AA-993 R(3)AA-993	YX-0993 / YZ-0993
[308]-[354]	Alternate Communicator Receiver 1 absent/restore	MA/R	E(3)5A-001 R(3)5A-001	YS-0001 / YK-0001
[308]-[354]	Alternate Communicator Receiver 2 absent/restore	MA/R	E(3)5A-002 R(3)5A-002	YS-0002 / YK-0002
[308]-[354]	Alternate Communicator Receiver 3 absent/restore	MA/R	E(3)5A-003 R(3)5A-003	YS-0003 / YK-0003

Section #	Definition	Dialer Direction*	Automatic Contact ID Codes	SIA Auto Rep Codes**
[308]-[354]	Alternate Communicator Receiver 4 absent/restore	MA/R	E(3)5A-004 R(3)5A-004	YS-0004 / YK-0004
[308]-[355]	Alternate Communicator Receiver 1 Supervisory trouble/ restore	MA/R	E(3)5A-001/R(3)5A-001	YS-0001 / YK-0001
[308]-[355]	Alternate Communicator Receiver 2 Supervisory trouble/ restore	MA/R	E(3)5A-002/R(3)5A-002	YS-0002 / YK-0002
[308]-[355]	Alternate Communicator Receiver 3 Supervisory trouble/ restore	MA/R	E(3)5A-003/R(3)5A-003	YS-0003 / YK-0003
[308]-[355]	Alternate Communicator Receiver 4 Supervisory trouble/ restore	MA/R	E(3)5A-004/R(3)5A-004	YS-0004 / YK-0004
[308]-[353]	Alternate Communicator SMS Config trouble/restore	MA/R	E(3)AA-995 R(3)AA-995	YX-0995 / YZ-0995
[308]-[351]	Remote Programming Begin/End	MA/R	E(6)27-000 / E(6)28-000	LB-0000 / LS-0000
Wireless Events				
[308]-[361]	Wireless Zone Low Battery trouble/restore. ZZZ= Wireless zones 001-128.	MA/R	E(3) 84-ZZZ R(3) 84-ZZZ	XT-ZZZZ / XR-ZZZZ
[308]-[361]	Wireless Device Low Battery trouble/restore. ZZZ= 601-616: wireless keypads, 701-732: wireless keys, 801-816: wireless Sirens, 901-908: wireless repeaters	MA/R	E(3) 84-ZZZ R(3) 84-ZZZ	XT-ZZZZ / XR-ZZZZ
[308]-[361]	Wireless Zone AC trouble/restore	MA/R	E(3)A1-ZZZ R(3)A1-ZZZ	AT-ZZZZ / AR-ZZZZ
[308]-[361]	Wireless Device Fault/ restore	MA/R	E(3)8A-ZZZ R(3)8A-ZZZ	UT-ZZZZ / UJ-ZZZZ
[308]-[361]	Wireless Temperature and Flood Probe trouble/restore	MA/R	E(3)8A-ZZZ R(3)8A-ZZZ	KT-ZZZZ / KJ-ZZZZ
[308]-[361]	Repeater 1 AC fail/ restore	MA/R	E (3)A1-901 R (3)A1-901	AT-0901 / AR-0901
[308]-[361]	Repeater 2 AC fail/ restore	MA/R	E(3)A1-902 R (3)A1-902	AT-0902 / AR-0902
[308]-[361]	Repeater 3 AC fail/ restore	MA/R	E (3)A1-903 R (3)A1-903	AT-0903 / AR-0903
[308]-[361]	Repeater 4 AC fail/ restore	MA/R	E (3)A1-904 R (3)A1-904	AT-0904 / AR-0904
[308]-[361]	Repeater 5 AC fail/ restore	MA/R	E(3)A1-905 R (3)A1-905	AT-0905 / AR-0905
[308]-[361]	Repeater 6 AC fail/ restore	MA/R	E (3)A1-906 R (3)A1-906	AT-0906 / AR-0906

Section #	Definition	Dialer Direction*	Automatic Contact ID Codes	SIA Auto Rep Codes**
[308]-[361]	Repeater 7 AC fail/ restore	MA/R	E (3)A1-907 R (3)A1-907	AT-0907 / AR-0907
[308]-[361]	Repeater 8 AC fail/ restore	MA/R	E (3)A1-908 R (3)A1-908	AT-0908/ AR-0908
[308]-[361]	Self Test Trouble/ Restore* **Note:** To prevent a reporting code conflict do not program PG9984 as zone 1.	MA/R	E (3)89-ZZZ R (3)89-ZZZ	YX/YZ-ZZZZ
Miscellaneous Alarms				
[308]-[001]	Duress Alarm - Code entered at keypad	A/R	E(1)21-000	HA-0000
[308]-[001]	Opening After Alarm - Disarmed with alarm in memory	A/R	E(4)58-000	OR-0000
[308]-[001]	Recent Closing - Alarm occurs within two minutes of system arming	A/R	E(4)59-UUU	CR-UUUU
[308]-[001]	Burglary Verified	A/R	E(1)39-000	BV-0000
[308]-[001]	Burglary Not Verified	A/R	E(3)78-000	BG-0000
[308]-[001]	HSM2108 Zone Expander Supervisory Alarm/restore	A/R	E(1)43-000 R(1)43-000	UA-0000 / UH-0000
[308]-[002]	Holdup Verified	A/R	E(1)29-000	HV-0000
[308]-[001]	Alarm Canceled before expiry of alarm cancellation timer	A/R	E(4)A6-UUU	OC-UUUU
[308]-[011]	PGM2 (Silent 24 Hour Input) -Aux Input Alarm/restore	A/R	E(1)46-992 R(1)46-992	UA-0992 / UH-0992
[308]-[011]	PGM2 (Audible 24 Hour Input) -Aux Input Alarm/restore	A/R	E(1)4A-992 R(1)4A-992	UA-0992 / UH-0992
[308]-[305]	PGM2 2-Wire Smoke Alarm/Restore	A/R	E(1)11-992 R(1)11-992	FA-0992 / FH-0992
Priority Alarm and Restoral Events				
[308]-[011]	[F] Key alarm/restore	A/R	E(1)1A-000 R(1)1A-000	FA-0000 / FH-0000
[308]-[011]	[M] Key alarm/restore	A/R	E(1)AA-000 R(1)AA-000	MA-0000 / MH-0000
[308]-[011]	[P] Key alarm/restore	A/R	E(1)2A-000 R(1)2A-000	PA-0000 / PH-0000
Miscellaneous Closing				
[308]-[221]	Zone Bypass at time of arming	O/C	E(5)7A-ZZZ	UB-ZZZZ
[308]-[221]	Zone Unbypass	O/C	R(5)7A-ZZZ	UU-ZZZZ
Testing				
[308]-[401]	Walk Test Begin/End	T	E(6)A7-UUU R(6)A7-UUU	TS-UUUU/TE-UUUU
[308]-[401]	Periodic Test	T	E(6)A2-000	RP-0000

Section #	Definition	Dialer Direction*	Automatic Contact ID Codes	SIA Auto Rep Codes**
[308]-[401]	Periodic Test with Trouble	T	E(6)A8-000	RY-0000
[308]-[401]	System Test - [*][6] bell/ communications test	T	E(6)A1-000	RX-0000
Maintenance				
[308]-[311]	General System trouble/restore - An RF jam trouble occurred/ was restored	MA/R	E(3) AA-000 R(3) AA-000	YX-0000 / YZ-0000
[308]-[311]	Fire trouble/restore	MA/R	E(3)73-000 R(3)73-000	FT-0000 / FJ-0000
[308]-[314]	Gas trouble/restore	MA/R	E(3)8A-ZZZ R(3)8A-ZZZ	GT-ZZZZ / GJ-ZZZZ
[308]-[314]	Delinquency trouble/ restore	MA/R	E(6)54-000 R(6)54-000	CD-0000
[308]-[314]	Heat trouble/restore	MA/R	E(3)8A-ZZZ R(3)8A-ZZZ	KT-ZZZZ / KJ-ZZZZ
[308]-[314]	Freeze Trouble / Restore	MA/R	E(3)8A - ZZZ R(3)8A - ZZZ	ZT-ZZZZ / ZJ-ZZZZ
	Carbon Monoxide Trouble	MA/R	E(3)8A - ZZZ R(3)8A - ZZZ	UT-ZZZZ / UJ-ZZZZ
[308]-[311]	Cold Start - System has restarted after total power loss	MA/R	R(3) A5-000	RR-0000
[308]-[312]	Event Buffer 75% Full	MA/R	E(6)22-000	JL-0000
[308]-[312]	DLS Lead In - Download session start	MA/R	E(4)11-000	RB-0000
[308]-[312]	DLS Lead Out - Download session stop	MA/R	E(4)12-000	RS-0000
[308]-[312]	SA Lead In - Download session start	MA/R	E(4)11-000	RB-0000
[308]-[312]	SA Lead Out - Download session stop	MA/R	E(4)12-000	RS-0000
[308]-[312]	Installer Lead In - Installer Programming has been entered	MA/R	E(6)27-000	LB-0000
[308]-[312]	Installer Lead out - Installer Programming has been exited	MA/R	E(6)28-000	LS-0000
[308]-[313]	Panel firmware update begin/ successful	MA/R	E(9)01-900 R(9)01-900	LB-0900 / LS-0900
[308]-[313]	Panel firmware update fail	MA/R	E(9)02-900	LU-0900
[308]-[321]	Receiver 1 FTC Trouble Restore	MA/R	R(3)54-001	YK-0001
[308]-[321]	Receiver 2 FTC Trouble Restore	MA/R	R(3)54-002	YK-0002

Section #	Definition	Dialer Direction*	Automatic Contact ID Codes	SIA Auto Rep Codes**
[308]-[321]	Receiver 3 FTC Trouble Restore	MA/R	R(3)54-003	YK-0003
[308]-[321]	Receiver 4 FTC Trouble Restore	MA/R	R(3)54-004	YK-0004
* ** ***	A/R = alarms/restores; T/R = tampers/restorers; O/C = openings/closings; MA/R = maintenance alarms/restores; T = test transmissions UUU = user number (user 001-1000). Note that for CID, enter 999 for user 1000. ZZZ/ZZZZ = zone number (001-128). Zones and panic pendants are identified, wireless keys can be identified for openings and closings.			

Contact ID & SIA Zone Alarm/Restore Event Codes (as per SIA DCS: 'Contact ID' 01-1999):

The table below defines the meaning of all Contact ID and SIA zone alarm/restore event codes.

Zone Definition	SIA Auto Rep Codes	Contact ID Auto Rep Codes
Delay 1	BA-ZZZZ / BH-ZZZZ	E(1) 3A - ZZZ / R(1)3A- ZZZ
Delay 2	BA-ZZZZ / BH-ZZZZ	E(1) 3A - ZZZ / R(1)3A- ZZZ
Instant	BA-ZZZZ / BH-ZZZZ	E(1) 3A - ZZZ / R(1)3A- ZZZ
Interior	BA-ZZZZ / BH-ZZZZ	E(1) 3A - ZZZ / R(1)3A- ZZZ
Interior Stay/Away	BA-ZZZZ / BH-ZZZZ	E(1) 3A - ZZZ / R(1)3A- ZZZ
Delay Stay/Away	BA-ZZZZ / BH-ZZZZ	E(1) 3A - ZZZ / R(1)3A- ZZZ
Instant Stay/Away	BA-ZZZZ / BH-ZZZZ	E(1) 3A - ZZZ / R(1)3A- ZZZ
Interior Delay	BA-ZZZZ / BH-ZZZZ	E(1) 3A - ZZZ / R(1)3A- ZZZ
Day Zone	BA-ZZZZ / BH-ZZZZ	E(1) 3A - ZZZ / R(1)3A- ZZZ
Night Zone	BA-ZZZZ / BH-ZZZZ	E(1) 3A - ZZZ / R(1)3A- ZZZ
24-Hr. Burglary	BA-ZZZZ / BH-ZZZZ	E(1) 3A - ZZZ / R(1)3A- ZZZ
Delayed 24-Hr. Fire (Wireless)	FA-ZZZZ / FH-ZZZZ	E(1) 1A - ZZZ / R(1)1A - ZZZ
Standard 24-Hr. Fire (Wireless)	FA-ZZZZ / FH-ZZZZ	E(1) 1A - ZZZ / R(1)1A - ZZZ
24-Hr. Sprinkler	SA-ZZZZ / SH-ZZZZ	E(1) 13 - ZZZ / R(1)13 - ZZZ
24-Hr.Low Temperature	ZA-ZZZZ / ZH-ZZZZ	E(1) 59 - ZZZ / R(1)59-ZZZ
24-Hr High Temperature	KA-ZZZZ / KH-ZZZZ	E(1) 58 - ZZZ / R(1)58 - ZZZ
24-Hr. Latching Tamper	BA-ZZZZ / BH-ZZZZ	E(1) 3A - ZZZ / R(1)3A- ZZZ
24-Hr. Non Alarm (Walk Test Only)	BA-ZZZZ / BH-ZZZZ	E(1) 3A - ZZZ / R(1)3A- ZZZ
24-Hr. Non-latching Tamper	TA-ZZZZ / TR-ZZZZ	E(3) 83 - ZZZ / R(3)83 - ZZZ
Momentary Keyswitch Arm (Walk Test Only)	BA-ZZZZ / BH-ZZZZ	E(1) 3A - ZZZ / R(1)3A- ZZZ
Maintained Keyswitch Arm (Walk Test Only)	BA-ZZZZ / BH-ZZZZ	E(1) 3A - ZZZ / R(1)3A- ZZZ
Momentary Keyswitch Disarm (Walk Test Only)	BA-ZZZZ / BH-ZZZZ	E(1) 3A - ZZZ / R(1)3A- ZZZ
Maintained Keyswitch Disarm (Walk Test Only)	BA-ZZZZ / BH-ZZZZ	E(1) 3A - ZZZ / R(1)3A- ZZZ
24-Hr. Supervisory	US-ZZZZ / UR-ZZZZ	E(1) 5A - ZZZ / R(1)5A - ZZZ
24-Hr. Supervisory Buzzer	UA-ZZZZ / UH-ZZZZ	E(1) 5A - ZZZ / R(1)5A - ZZZ
24-Hr. Auto Verified Fire (Wireless)	FA-ZZZZ / FH-ZZZZ	E(1) 1A - ZZZ / R(1)1A - ZZZ
Fire Supervisory	FS-ZZZZ / FV-ZZZZ	E(2) AA - ZZZ / R(2)AA - ZZZ
24-Hr. Gas	GA-ZZZZ / GH-ZZZZ	E(1) 51 - ZZZ / R(1)51 - ZZZ
24-Hr. CO Alarm	GA-ZZZZ / GH-ZZZZ	E(1) 62 - ZZZ / R(1)62 - ZZZ
24-Hr. Holdup	HA-ZZZZ / HH-ZZZZ	E(1) 22 - ZZZ / R(1)22 - ZZZ
24-Hr. Panic	PA-ZZZZ / PH-ZZZZ	E(1) 2A - ZZZ / R(1)2A - ZZZ
24-Hr. Flood	WA-ZZZZ / WH-ZZZZ	E(1) 54 - ZZZ / R(1)54 - ZZZ
24-Hr Heat	KA-ZZZZ / KH-ZZZZ	E(1) 58 - ZZZ / R(1)58 - ZZZ
24-Hr. Medical	MA-ZZZZ / MH-ZZZZ	E(1) AA - ZZZ / R(1)AA - ZZZ
24-Hr. Emergency	QA-ZZZZ / QH-ZZZZ	E(1) A1 - ZZZ / R(1)A1 - ZZZ
Doorbell Zone/Restore (Walk Test Only)	BA-ZZZZ / BH-ZZZZ	E(1) 3A - ZZZ / R(1)3A - ZZZ

Zone Definition	SIA Auto Rep Codes	Contact ID Auto Rep Codes
Push to Set (Walk Test Only)	BA-ZZZZ / BH-ZZZZ	E(1) 3A - ZZZ / R(1)3A - ZZZ
Final Door Set	BA-ZZZZ / BH-ZZZZ	E(1) 3A - ZZZ / R(1)3A - ZZZ
ZZZ/ZZZZ = zones 001-128		

Word library

1	Aborted	2	AC	3	Access	4	Active	5	Activity
6	Alarm	7	All	8	AM	9	Area	10	Arm
11	Armed	12	Arming	13	Attic	14	Auxiliary	15	Away
16	Baby	17	Back	18	Bar	19	Basement	20	Bathroom
21	Battery	22	Bedroom	23	Bonus	24	Bottom	25	Breezeway
26	Building	27	Bus	28	Bypass	29	Bypassed	30	Cabinet
31	Camera	32	Canceled	33	Car	34	Carbon	35	Central
36	Chime	37	Closed	38	Closet	39	Closing	40	Code
41	Communicator	42	Computer	43	Control	44	Date	45	Daughter’s
46	Degrees	47	Delay	48	Den	49	Desk	50	Detector
51	Dining	52	Disarmed	53	Door	54	Down	55	Download
56	Downstairs	57	Drawer	58	Driveway	59	Duct	60	Duress
61	East	62	Energy	63	Enter	64	Entry	65	Error
66	Exercise	67	Exit	68	Exterior	69	Factory	70	Failure
71	Family	72	Father’s	73	Feature	74	Fence	75	Fire
76	First	77	Floor	78	Force	79	Foyer	80	Freeze
81	Front	82	Furnace	83	Gallery	84	Garage	85	Gas
86	Glass	87	Goodbye	88	Gym	89	Hallway	90	Heat
91	Hello	92	Help	93	High	94	Home	95	House
96	In	97	Install	98	Interior	99	Intrusion	100	Invalid
101	Is	102	Key	103	Kids	104	Kitchen	105	Latchkey
106	Laundry	107	Left	108	Level	109	Library	110	Light
111	Lights	112	Living	113	Load	114	Loading	115	Low
116	Lower	117	Main	118	Master	119	Mat	120	Medical
121	Memory	122	Menu	123	Monoxide	124	Mother’s	125	Motion
126	No	127	North	128	Not	129	Now	130	Number
131	Off	132	Office	133	OK	134	On	135	Open
136	Opening	137	Panic	138	Partition	139	Patio	140	Pet
141	Phone	142	Please	143	PM	144	Police	145	Pool
146	Porch	147	Power	148	Press	149	Program	150	Progress
151	Quiet	152	Rear	153	Receiver	154	Report	155	RF
156	Right	157	Room	158	Safe	159	Saver	160	Schedule
161	Screen	162	Second	163	Sensor	164	Service	165	Shed
166	Shock	167	Shop	168	Side	169	Siren	170	Sliding
171	Smoke	172	Son’s	173	Sound	174	South	175	Special
176	Stairs	177	Stay	178	Sun	179	Supervisory	180	System
181	Tamper	182	Temperature	183	Test	184	Time	185	To
186	Touchpad	187	Trouble	188	Unbypass	189	Unit	190	Up
191	West	192	Window	193	Zone	194	0	195	1
196	2	197	3	198	4	199	5	200	6
201	7	202	8	203	9	204	A	205	B
206	C	207	D	208	E	209	F	210	G
211	H	212	I	213	J	214	K	215	L
216	M	217	N	218	O	219	P	220	Q
221	R	222	S	223	T	224	U	225	V

226	W	227	X	228	Y	229	Z	230	(Space)
231	‘ (Apostrophe)	232	- (Dash)	233	_ (Underscore)	234	*	235	#
236	:	237	/	238	?	239		240	

Template programming tables

The following tables show the programming options for template programming digits 1-5.

Digit 1 – Zones 1-8 Definition Options

Note: A “0” in the digit 1 location indicates that the first 8 zones use the panel default zone definitions.

Option	Zone 1	Zone 2	Zone 3	Zone 4	Zone 5	Zone 6	Zone 7	Zone 8	Zone Definitions (Options 1-6)
1	001	003	003	003	004	004	004	004	001 Delay 1
2	001	003	003	005	005	005	005	008	003 Instant
3	001	003	003	005	005	005	005	007	004 Interior
4	001	001	003	003	003	003	003	003	005 Interior Stay/Away
5	001	003	003	006	005	005	005	005	006 Delayed Stay/Away
6	001	003	003	006	005	005	005	008	007 Delayed 24Hr. Fire
7 (ADT)	001	001	006	006	006	001	001	001	008 Standard 24Hr. Fire (Wireless)

Digit 2 – System EOL Configuration Options

Option	EOL configuration	[13] bit 1	[13] bit 2
1	NC Loops	ON	OFF
2	SEOL	OFF	OFF
3	DEOL	OFF	ON

Digit 3 – Reporting Code Communication Options

Entry	Template	Programming
1	Disabled	[380] Comm Toggles 1 - Bit 1 Communications Enabled - Off
2	Receiver 1 and 2 SIA with Backup	[380] Comm Toggles 1 - Bit 1 Communications Enabled - On [350] Communicator Formats - [001] Receiver 1 - 04 SIA [350] Communicator Formats - [002] Receiver 2 - 04 SIA [350] Communicator Formats - [003] Receiver 3 - 04 SIA [350] Communicator Formats - [004] Receiver 4 - 04 SIA [381] Comm Toggles 2 - Bit 2 Bell Ringback - Off [384] Comm Backup - Bit 2 Receiver 2 Backup - On [384] Comm Backup - Bit 2 Receiver 2 Backup - Off [384] Comm Backup - Bit 2 Receiver 2 Backup - Off [300] Comm Path - [001] Receiver 1 - 01 PSTN [300] Comm Path - [002] Receiver 2 - 01 PSTN [300] Comm Path - [003] Receiver 3 - 01 PSTN [300] Comm Path - [004] Receiver 4 - 01 PSTN
3	Receiver 1 SIA, Receiver 2 CID with backup	[380] Comm Toggles 1 - Bit 1 Communications Enabled - On [350] Communicator Formats - [001] Receiver 1 - 03 CID [350] Communicator Formats - [002] Receiver 2 - 04 SIA [350] Communicator Formats - [003] Receiver 3 - 04 SIA [350] Communicator Formats - [004] Receiver 4 - 04 SIA [384] Comm Backup - Bit 2 Receiver 2 Backup - On [384] Comm Backup - Bit 2 Receiver 2 Backup - Off [384] Comm Backup - Bit 2 Receiver 2 Backup - Off [300] Comm Path - [001] Receiver 1 - 01 PSTN [300] Comm Path - [002] Receiver 2 - 01 PSTN [300] Comm Path - [003] Receiver 3 - 01 PSTN [300] Comm Path - [004] Receiver 4 - 01 PSTN

Entry	Template	Programming
4	Receiver 1 SIA	[380] Comm Toggles 1 - Bit 1 Communications Enabled - On [350] Communicator Formats - [001] Receiver 1 - 04 SIA [350] Communicator Formats - [002] Receiver 2 - 04 SIA [350] Communicator Formats - [003] Receiver 3 - 04 SIA [350] Communicator Formats - [004] Receiver 4 - 04 SIA [381] Comm Toggles 2 - Bit 2 Bell Ringback - Off [384] Comm Backup - Bit 2 Receiver 2 Backup - Off [384] Comm Backup - Bit 2 Receiver 2 Backup - Off [384] Comm Backup - Bit 2 Receiver 2 Backup - Off [300] Comm Path - [001] Receiver 1 - 01 PSTN [300] Comm Path - [002] Receiver 2 - 01 PSTN [300] Comm Path - [003] Receiver 3 - 01 PSTN [300] Comm Path - [004] Receiver 4 - 01 PSTN
5	Receiver 1 CID	[380] Comm Toggles 1 - Bit 1 Communications Enabled - On [350] Communicator Formats - [001] Receiver 1 - 03 CID [350] Communicator Formats - [002] Receiver 2 - 03 CID [350] Communicator Formats - [003] Receiver 3 - 03 CID [350] Communicator Formats - [004] Receiver 4 - 03 CID [384] Comm Backup - Bit 2 Receiver 2 Backup - Off [384] Comm Backup - Bit 2 Receiver 2 Backup - Off [384] Comm Backup - Bit 2 Receiver 2 Backup - Off [300] Comm Path - [001] Receiver 1 - 01 PSTN [300] Comm Path - [002] Receiver 2 - 01 PSTN [300] Comm Path - [003] Receiver 3 - 01 PSTN [300] Comm Path - [004] Receiver 4 - 01 PSTN
6	Receiver 1 and 2 CIA with backup	[380] Comm Toggles 1 - Bit 1 Communications Enabled - On [350] Communicator Formats - [001] Receiver 1 - 03 CID [350] Communicator Formats - [002] Receiver 2 - 03 CID [350] Communicator Formats - [003] Receiver 3 - 03 CID [350] Communicator Formats - [004] Receiver 4 - 03 CID [384] Comm Backup - Bit 2 Receiver 2 Backup - On [384] Comm Backup - Bit 2 Receiver 2 Backup - Off [384] Comm Backup - Bit 2 Receiver 2 Backup - Off [300] Comm Path - [001] Receiver 1 - 01 PSTN [300] Comm Path - [002] Receiver 2 - 01 PSTN [300] Comm Path - [003] Receiver 3 - 01 PSTN [300] Comm Path - [004] Receiver 4 - 01 PSTN

Digit 4 – Reporting Code Configuration Options

Option	Common	Selected Troubles	Openings/ Closings	Zone Alarm Restore	DLS/Installer Lead In/Out
1	i			i	X
2	i	i		i	X
3	i		i	i	X
4	i	i	i	i	X
5	i	i			X
6	i		i		X

Option	Common	Selected Troubles	Openings/ Closings	Zone Alarm Restore	DLS/Installer Lead In/Out
7	i	i	i		X
8	i				
i indicates included, blank indicates default setting, X indicates disabled					

Common Group

Common Group	Common Group Programming
Set all reporting codes to automatic	[308] Event Reporting - All Events On
Alarm/restore call directions enabled	[311][001] Partition 1 Alarm/Restore - Bit 1 Receiver 1 - On [311][001] Partition 1 Alarm/Restore - Bit 2 Receiver 2 - Off [311][001] Partition 1 Alarm/Restore - Bit 3 Receiver 3 - Off [311][001] Partition 1 Alarm/Restore - Bit 4 Receiver 4 - Off
Tamper/restore call directions disabled	[311][002] Partition 1 Tamper/Restore - Bit 1 Receiver 1 - Off [311][002] Partition 1 Tamper/Restore - Bit 2 Receiver 2 - Off [311][002] Partition 1 Tamper/Restore - Bit 3 Receiver 3 - Off [311][002] Partition 1 Tamper/Restore - Bit 4 Receiver 4 - Off
Opening/closing call directions disabled	[311][003] Partition 1 Open/Close - Bit 1 Receiver 1 - Off [311][003] Partition 1 Open/Close - Bit 2 Receiver 2 - Off [311][003] Partition 1 Open/Close - Bit 3 Receiver 3 - Off [311][003] Partition 1 Open/Close - Bit 4 Receiver 4 - Off
Maintenance call directions enabled	[309][001] Maintenance - Bit 1 Receiver 1 - On [309][001] Maintenance - Bit 2 Receiver 2 - Off [309][001] Maintenance - Bit 3 Receiver 3 - Off [309][001] Maintenance - Bit 4 Receiver 4 - Off
Test transmission call directions disabled	[309][002] Test Transmission - Bit 1 Receiver 1 - Off [309][002] Test Transmission - Bit 2 Receiver 2 - Off [309][002] Test Transmission - Bit 3 Receiver 3 - Off [309][002] Test Transmission - Bit 4 Receiver 4 - Off

- Enables/Disables all Reporting Codes
- Selected Troubles - Enables the following Troubles

Selected Troubles Group	Selected Troubles Programming
Battery	[308][301] - Bit 3 Panel Low Battery - On [308][301] - Bit 4 Panel Low Battery Restore - On [308][301] - Bit 5 Panel Battery Absent - On [308][301] - Bit 6 Panel Battery Absent Restore - On [308][331] - Bit 3 Module Low Battery - On [308][331] - Bit 4 Module Low Battery Restore - On [308][331] - Bit 5 Module Battery Absent - On [308][331] - Bit 6 Module Battery Absent Restore - On
AC Failure	[308][301] - Bit 1 Panel AC Trouble - Off [308][301] - Bit 2 Panel AC Trouble Restore - Off [308][331] - Bit 1 Module AC Trouble - Off [308][331] - Bit 2 Module AC Trouble Restore - Off
Bell Circuit Trouble	[308][302] - Bit 1 Panel Bell Trouble - On [308][302] - Bit 2 Panel Bell Trouble Restore - On
Fire, Alarm	[308][311] - Bit 3 Fire Trouble - On [308][311] - Bit 4 Fire Trouble Restore - On [308][305] - Bit 3 2W Smoke Trouble - On [308][305] - Bit 4 2W Smoke Trouble Restore - On
Aux Power Supply Trouble	[308][302] - Bit 5 Panel AUX Trouble - On [308][302] - Bit 6 Panel AUX Trouble Restore - On [308][332] - Bit 5 Module AUX Trouble - On [308][332] - Bit 6 Module AUX Trouble Restore - On

Selected Troubles Group	Selected Troubles Programming
TLM Trouble	[308][302] - Bit 3 Panel TLM Trouble - Off [308][302] - Bit 4 Panel TLM Trouble Restore - On
General System Tamper	[308][101] - Bit 3 Module Tamper Trouble - Off [308][101] - Bit 4 Module Tamper Restore - Off
General System Supervisory	[308][332] - Bit 3 Module Supervisory Trouble - On [308][332] - Bit 4 Module Supervisory Restore - On

- Openings & Closings - Sets Residential Dial Reporting Codes for all openings and closings

Openings/Closings Group	Openings/Closings Programming
Enable All User Open/Close Reports	[308][201] - Bit 1 User Closing - On [308][201] - Bit 2 User Opening - On [308][201] - Bit 5 Special Closing - On [308][201] - Bit 6 Special Opening - On [308][202] - Bit 1 Automatic Closing - On [308][202] - Bit 2 Automatic Opening - On [308][202] - Bit 3 Automatic Cancel - On

- Zone Alarm Restore Group - Disables all zone alarm restore reporting codes

Zone Alarm Restore Group	DLS/Installer Lead In/Out Programming
Restore zone alarm reporting codes	[307][001] - Bit 2 Alarm Restore - Off [307][002] - Bit 2 Alarm Restore - Off [307][003] - Bit 2 Alarm Restore - Off [307][004] - Bit 2 Alarm Restore - Off [307][005] - Bit 2 Alarm Restore - Off [307][006] - Bit 2 Alarm Restore - Off [307][007] - Bit 2 Alarm Restore - Off [307][008] - Bit 2 Alarm Restore - Off [307][009] - [128] Bit 2 Alarm Restore - Off

- Installer Lead-in/Lead-out and DLS Lead-in/Lead-out

DLS/Installer Lead In/Out Group	DLS/Installer Lead In/Out Programming
DLS/Installer Disabled	[308][312] - Bit 1 Installer Lead In - Off [308][312] - Bit 2 Installer Lead Out - Off [308][312] - Bit 3 DLS Lead In - Off [308][312] - Bit 4 DLS Lead Out - Off [308][312] - Bit 5 SA Lead In - Off [308][312] - Bit 6 SA Lead Out - Off

Digit 5 - DLS Connection Options

Option	Programming section	DLS connection/call back setting
1	[401] Option 1 OFF Option 3 OFF Option 4 OFF [406] 000	Double Call Disabled Call Back Disabled User Initiated Call Up Disabled Number of Rings to Answer On Disabled
2	[401] Option 1 ON Option 3 OFF Option 4 OFF [406] 008	Double Call Enabled Call Back Disabled User Initiated Call Up Disabled Number of Rings to Answer On is 8
3	[401] Option 1 ON Option 3 ON Option 4 OFF [406] 008	Double Call Enabled Call Back Enabled User Initiated Call Up Disabled Number of Rings to Answer On is 8
4	[401] Option 1 ON Option 3 OFF Option 4 ON [406] 008	Double Call Enabled Call Back Disabled User Initiated Call Up Enabled Number of Rings to Answer On is 8

After entering a valid 5-digit template programming code, the system prompts for the following data in the sequence listed:

1. Central Station Telephone Number
   1. Program the required central station phone number. Press [#] to complete your entry.

      This phone number is entered into programming section [301][001].
2. Central Station System Account Code (4 or 6-digit code)
   3. Program the system account code. All digits must be entered in order to complete your entry.

      This account code is entered into programming section [310][000].
4. Partition 1 Account Code (4 digit code)
   5. Program the partition 1 account code. All digits must be entered in order to complete your entry.

      This account code is entered into programming section [310][001].
6. DLS Access Code (6-digit code)

7. Program the required DLS access code. All 6 digits must be entered in order to complete your entry.

   This access code is entered into programming section [403].

8. Entry Delay 1 and Exit Delay

9. Enter the 3-digit entry delay 1 (in seconds) followed by the desired 3-digit exit delay (in seconds). These entries affect all partitions.

   All 3 digits must be entered in order to complete each section entry.

   These values are entered in programming sections [005][001]-[008] entry 1 and 3 respectively.

10. Installer's Code

11. Enter the 4, 6 or 8-digit installer access code (dependent on section [041]). All digits must be entered in order to complete the section entry.

    This code is entered into programming section [006][001].

    After the installer code has been programmed the system returns to the base installer programming menu.

    All template programming information defaults after performing a hardware or software panel default. The 5-digit template programming code is defaulted to 0000000.

ⓘ **Note:** Pressing the pound key (#) advances through template programming, accepting what is displayed in these locations, potentially overwriting desired programming. Depending on the option programmed, restoring the defaults using template programming may not be possible.

ASCII Characters

!	“	#	$	%	&	‘	(	)	*	+	,	-	.	/	0	1	2	3	4	5	6	7	8
33	34	35	36	37	38	39	40	41	42	43	44	45	46	47	48	49	50	51	52	53	54	55	56
9	:	;	<	=	>	?	@	A	B	C	D	E	F	G	H	I	J	K	L	M	N	O	P
57	58	59	60	61	62	63	64	65	66	67	68	69	70	71	72	73	74	75	76	77	78	79	80
Q	R	S	T	U	V	W	X	Y	Z	[	¥	]	^	_	＼	a	b	c	d	e	f	g	h
81	82	83	84	85	86	87	88	89	90	91	92	93	94	95	96	97	98	99	100	101	102	103	104
i	j	k	l	m	n	o	p	q	r	s	t	u	v	w	x	y	z	{	|	}	→	←	
105	106	107	108	109	110	111	112	113	114	115	116	117	118	119	120	121	122	123	124	125	126	127	160
□	「	」		･	ｦ	ｱ	ｲ	ｳ	ｴ	ｵ	ｶ	ｷ	ｸ	ｹ	ｺ	ｻ	ｼ	ｽ	ｾ	ｿ	ﾀ	ﾁ	ﾂ
161	162	163	164	165	166	167	168	169	170	171	172	173	174	175	176	177	178	179	180	181	182	183	184
ﾃ	ﾄ	ﾅ	ﾆ	ﾇ	ﾈ	ﾉ	ﾊ	ﾋ	ﾌ	ﾍ	ﾎ	ﾏ	ﾐ	ﾑ	ﾒ	ﾓ	ﾔ	ﾕ	ﾖ	ﾗ	ﾘ	ﾙ	ﾚ
185	186	187	188	189	190	191	192	193	194	195	196	197	198	199	200	201	202	203	204	205	206	207	208
ﾛ	ﾜ	ﾝ	?	□	α	ä	β	ε	μ	σ	ρ	ｸﾞ	√										
209	210	211	212	213	214	215	216	217	218	219	220	221	222	223	224	225	226	227	228	229	230	231	232
⊣	j	x	¢	£	ñ	Ö	p	q	θ	œ	Ω	ü	Σ	π	X	y	千	円	万	÷			
233	234	235	236	237	238	239	240	241	242	243	244	245	246	247	248	249	250	251	252	253			

Wiring diagrams

HS2016, HS2032, HS2064, HS2128 UL/ULC Wiring Diagram

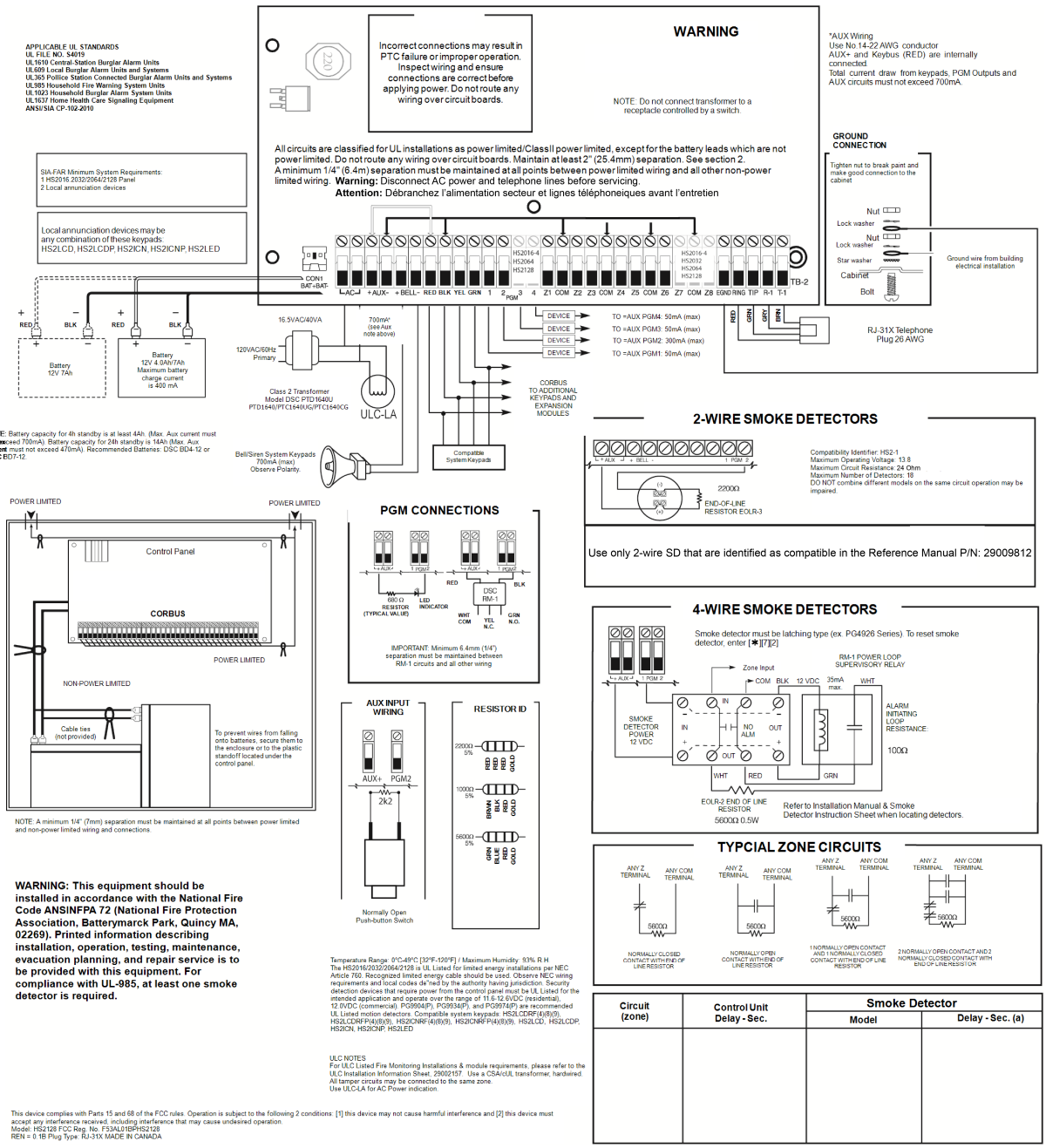

Zone Wiring

Zones can be wired for Normally Open, Normally Closed Contacts with Single-end-of-line (SEOL) resistors or Double End-of-Line (DEOL) resistors. Observe the following guidelines

For UL Listed Installations use SEOL or DEOL only.

Minimum 22 AWG wire, maximum 18 AWG

Do NOT use shielded wire

Wire run resistance shall not exceed 100Ω, refer to the chart below:

Burglary Zone Wiring Chart

Wire Guage	Maximum Wiring length to End of Line Resistor (feet/metres)
22	3000 / 914
20	4900 / 1493
19	6200 / 1889
18	7800 / 2377

Section [001] Selects Zone Definition

Section [013] Opt [1] Selects Normally Closed or EOL resistors

Section [013] Opt [2] Selects Single EOL or Double EOL resistors.

Normally Closed Loops - Do NOT use for UL Installations

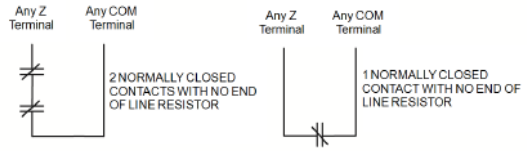

Single End-of-Line Resistor Wiring

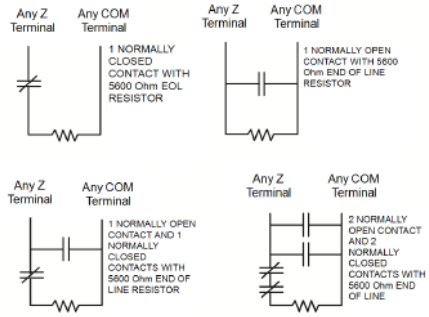

Double End-of-Line Resistor Wiring

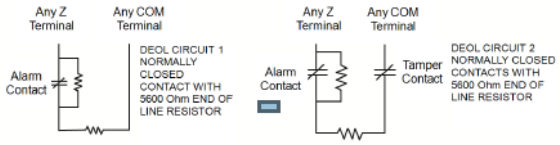

Zone Status

Loop Resistance	**Loop Status**
- 0Ω (shorted wire/loop)	Fault
- 5600Ω (contact closed)	Secure
- infinite (broken wire, open)	Tamper
- 11,200Ω (contact open)	Violated

Bell Wiring

These terminals supply 700mA of current at 12VDC for commercial installations and 10.8-12.5 VDC for residential installations (e.g.DSC SD-15 WULF). To comply with NFPA 72 Temporal Three Pattern requirements:

Program Section [013] Opt [8] ON.

The Bell output is supervised and power limited. If unused, connect a 1000Ω resistor across Bell+ and Bell- to prevent the panel from displaying a trouble. See [*][2].

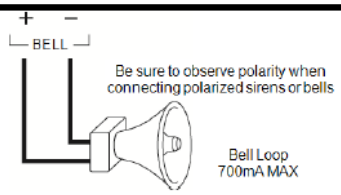

Note: Bell output is current limited by 2A PTC

Note: Steady, Pulsed and Temporal Three Pattern alarms are supported.

PGM Wiring

PGMs switch to ground when activated by control panel. Connect the positive side of the device to be activated to the AUX+ Terminal. Connect the negative terminal to the PGM. Current output is as follows:

PGM 1, 3, 4 - 50mA

PGM 2 - 300mA

For current levels greater than 300mA a UL listed RM-1 or RM-2 relay module is required.

PGM2 can also be used for 2-wire smoke detectors.

Note: Use SEOL resistors on FIRE ZONES ONLY.

2-wire Smoke Detectors Initiating Circuit

- Style B (Class B), Supervised, Power Limited
- Compatibility Identifier PC18-1
- DC Output Voltage 9.8-13.8 VDC
- Detector Load 2 mA (MAX)
- Single-end-of-line (SEOL) Resistor 2200Ω
- Loop Resistance 24Ω (MAX)
- Standby Impedance 1020Ω (NOM)
- Alarm Impedance 570Ω (MAX)
- Alarm Current 86 mA (MAX)
- Maximum number of 2-wire Smoke Detectors 18

PGM 1, LED Output with current limiting resistor and Optional Relay driver output

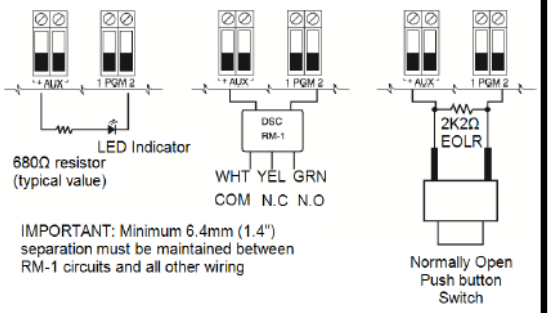

3-wire Smoke Detectors

4-wire Smoke Detectors

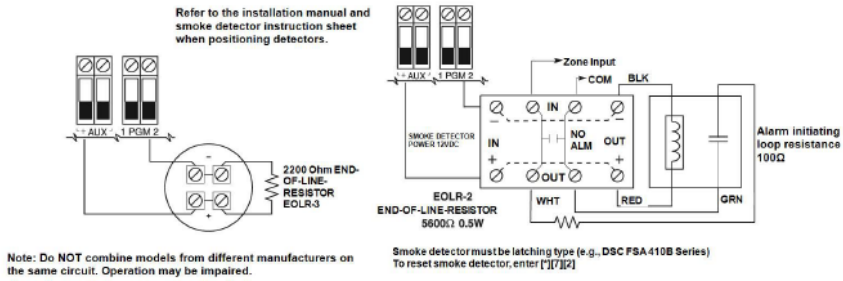

Telephone line wiring

Wire the telephone connection terminals (TIP, Ring, T-1, R-1) to an RJ-31x Connector as indicated.

For connection of multiple devices to the phone line, wire in the sequence shown.

Telephone format is programmed in section [350].

Telephone Call Directions are programmed in section [311] - [318].

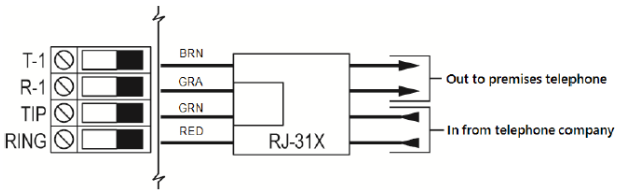

ⓘ **Note:** For ULC installations, please refer to the ULC Installation Information Sheet part #29002157.

Neo Reference Manual Feature Changes

V1.35

- When Access Code Required for [*][2] enabled, trouble beeps are silenced when the [*][2] menu has been entered and exited.
- New "Bell Silenced" message displayed after a fire or CO alarm is silenced with a user code.
- New PG devices supported.
- When [377][004] programmed with value 0445, panel generates randomized test transmission.
- Panel requests 2 images from each enrolled PIR Cam and sends to monitoring station during a system test.

V1.31

- Fixed an issue for Burglary Verification when set to Cross Zoning.
- After a burglary verification alarm was sent, subsequent alarms without burglary verification enabled were not transmitted.

V1.3

- 5-Digit Remote Reset Code: Replaces existing 4-Digit Remote Reset feature.
- Increased Proximity Tag Arming Flexibility: Proximity tag can always arm in Away Mode, or detect appropriate arming mode.
- Bell circuit damage caused by reverse polarity applied at Bell+ and Bell- : Bell circuit now accommodates reversing relay modules.
- CO Alarm followed Bell Timeout: CO Alarm now follows the Temporal CO pattern until Bell Timeout is reached, and then switches to 60s interval (Extended CO Cadence) until the alarm is acknowledged.

V1.21

- CP-01 Variant Auto-Arm in Stay Mode: CP-01 Variant now Auto Arms correctly in Away Mode.

V1.2

- Increased number of users: Allows for larger installations.
- Multi-partner integration: Allows interactive, access control and video within one intrusion platform (version 5.x of the communicator is required).
- Wireless Interconnected smoke alarms: o Triggers all wireless smoke detectors to sound when one goes into alarm.
- Global keypad support: management of multi-partition systems.
- Proximity tag control of PGM outputs.
- Toggle option to control PGM activation at beginning or end of exit delay: PGM activation can be customized to activate at the beginning or end of exit delay for hardwired integration with other devices
- Toggle option to disable door chime during quick exit: When using quick exit to leave the premise, keypads will not sound a door chime.
- Siren options for buzzer notification, door chime and trouble beep.

- HS2TCHP

  - Fixed an issue causing the Touchscreen Keypad to freeze.
  - Fixed issue where Touchscreen Keypad occasionally could not retrieve Alarm Memory.
  - Added photo mode screen saver.
  - User functions for SMS programming, late to open and authorizing update.

V1.14

- Way Audio: 2-way audio initiated by Central Station [802][603] option 8.
- Placement Test: Display 24 hour zone placement test results.
- Module supervisory Trouble: Corrected issue with module supervisory troubles being generated and restored immediately.
- Wireless Siren squawk: Wireless Siren squawk sounds arming in progress.
- Not Networked Trouble: The reporting of Not Networked Trouble will now follow the device supervisory window.
- Installer and DLS Access: Integration partner access will follow section [020] option 7.

V1.13

- Option for dialer directions for autoarm/ disarm

  - [308][202] Option 1 = Automatic Closing
  - [308][202] Option 2 = Automatic Opening

- Option to disable self-test trouble on PowerG devices

  - [308][311] Option 7 – Self Test Trouble
  - [308][311] Option 8 – Self Test Restore

- DLS support for an indication of what device types are supported by the panel.
- Option to disable AC Brownout feature

  - [024] Option 7 – AC Brownout Enable.
  - Keyswitch opening/ closing will identify the zone used for arming/ disarming

    - Keyswitch Open E4A9-ZZZ/OS-ZZZZ
    - Keyswitch Close R4A9-ZZZ/CS-ZZZZ

  - Autoarm/ disarm will report as a closing automatic and opening automatic

    - Auto Open E4A3-000/ OA-0000
    - Auto Close R4A3-000/ CA-0000

V1.12

- Fixed issue where V1.0 modules could cause the system to show a Ready LED indication with no zone activity/trouble and become unresponsive

V1.1

- Routine System Management (RSM) with DLS 5 v1.4
- Remote Firmware Upgrading using DLS 5 v 1.4

- Global keypad menu changes
- New Zone selections (Final Door Set and Push to Set)
- Support for Neo Touchscreen HS2TCHP, 2-way Audio Module HSM2955 and Alarm.com Communicators

V1.02

- Fixed Late to Close Reporting so that the correct identifier is sent

  - For Contact ID, correct identifier ‘E’ is sent instead of the incorrect ‘R’
  - For SIA, correct reporting code ‘CJ’ is sent instead of the incorrect ‘CI’

- Fixed issue where firmware upgrade of the panel caused all programming sections to be defaulted and modules to be unresponsive

V1.01

- Initial launch version of PowerSeries Neo

Regulatory Approvals

Regulatory Approvals

Regulatory Approvals

FCC COMPLIANCE STATEMENT

⚠ **CAUTION:** Changes or modifications not expressly approved by Digital Security Controls could void your authority to use this equipment.

This equipment has been tested and found to comply with the limits for a Class B digital device, pursuant to Part 15 of the FCC Rules. These limits are designed to provide reasonable protection against harmful interference in a residential installation. This equipment generates, uses and can radiate radio frequency energy and, if not installed and used in accordance with the instructions, may cause harmful interference to radio communications. However, there is no guarantee that interference will not occur in a particular installation. If this equipment does cause harmful interference to radio or television reception, which can be deter-mined by turning the equipment off and on, the user is encouraged to try to correct the interference by one or more of the following measures:

- Re-orient the receiving antenna.
- Increase the separation between the equipment and receiver.
- Connect the equipment into an outlet on a circuit different from that to which the receiver is connected.
- Consult the dealer or an experienced radio/television technician for help.

The user may find the following booklet prepared by the FCC useful: "How to Identify and Resolve Radio/Television Interference Problems". This booklet is available from the U.S. Government Printing Office, Washington D.C. 20402, Stock # 004-000-00345-4.

IMPORTANT INFORMATION

This equipment complies with Part 68 of the FCC Rules. On the side of this equipment is a label that contains, among other information, the FCC registration number and ringer equivalence number (REN) for this equipment. If requested, this number must be provided to the Telephone Company.

HS2128 Product Identifier US: F53AL01BHS2128

REN: 0.1B; USOC Jack: RJ-31X

Telephone Connection Requirements

A plug and jack used to connect this equipment to the premises wiring and telephone network must comply with the applicable FCC Part 68 rules and requirements adopted by the ACTA. A compliant telephone cord and modular plug is provided with this product. It is designed to be connected to a compatible modular jack that is also compliant. See installation instructions for details.

Ringer Equivalence Number (REN)

The REN is used to determine the number of devices that may be connected to a telephone line. Excessive RENs on a telephone line may result in the devices not ringing in response to an incoming call. In most but not all areas, the sum of RENs should not exceed five (5.0). To be certain of the number of devices that may be connected to a line, as determined by the total RENs, contact the local Telephone Company. For products approved after July 23, 2001, the REN for this product is part of the product identifier that has the format.

US: AAAEQ##TXXXX. The digits represented by ## are the REN without a decimal point (e.g., 03 is a REN of 0.3). For earlier products, the REN is separately shown on the label.

Incidence of Harm

If this equipment HS2016/HS2032/HS2064/HS2128 causes harm to the telephone network, the telephone company will notify you in advance that temporary discontinuance of service may be required. But if advance notice is not practical, the Telephone Company will notify the customer as soon as possible. Also, you will be advised of your right to file a complaint with the FCC if you believe it is necessary.

Changes in Telephone Company Equipment or Facilities

The Telephone Company may make changes in its facilities, equipment, operations or procedures that could affect the operation of the equipment. If this happens the Telephone Company will provide advance notice in order for you to make necessary modifications to maintain uninterrupted service.

Equipment Maintenance Facility

If trouble is experienced with this equipment HS2016/HS2032/HS2064/HS2128 for repair or warranty information, please contact the facility indicated below. If the equipment is causing harm to the telephone network, the Telephone Company may request that you disconnect the equipment until the problem is solved. This equipment is of a type that is not intended to be repaired by the end user. Tyco Atlanta Distribution Center 2600 West Pointe Dr. Lithia Springs, GA 30122

Additional Information

Connection to party line service is subject to state tariffs. Contact the state public utility commission, public service commission or corporation commission for information.

Alarm dialling equipment must be able to seize the telephone line and place a call in an emergency situation, even if other equipment (telephone, answering system, computer modem, etc.) already has the telephone line in use. To do so, alarm dialling equipment must be connected to a properly installed RJ-31X jack that is electrically in series with and ahead of all other equipment attached to the same telephone line. Proper installation is depicted in the figure below. Consult your telephone company or a qualified installer if you have any questions concerning these instructions or about installing the RJ-31X jack and alarm dialling equipment for you.

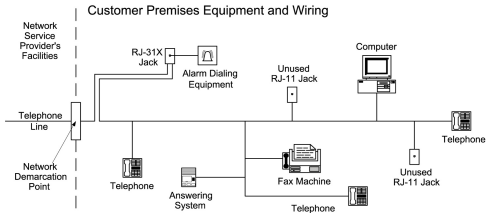

ISED STATEMENT

NOTICE: This Equipment, HS2016/HS2032/HS2064/HS2128, meets the applicable ISED Terminal Equipment Technical Specifications. This is confirmed by the registration number. The abbreviation, IC, before the registration number signifies that registration was performed based on a Declaration of Conformity indicating that ISED technical specifications were met. It does not imply that ISED approved the equipment.

NOTICE: The Ringer Equivalence Number (REN) for this terminal equipment is 0.1. The REN assigned to each terminal equipment provides an indication of the maximum number of terminals allowed to be connected to a telephone interface. The termination on an interface may consist of any combination of devices subject only to the requirement that the sum of the Ringer Equivalence Numbers of all devices does not exceed five.

Certification Number:IC: 160A-HS2128; This Class B digital apparatus complies with Canadian ICES-003.

UL/ULC Installations

This product (HS2016/HS2032/HS2064/HS2128) has been tested and found in compliance with the following standards:

- UL1610 Central-Station Burglar-Alarm Units
- UL365 Police Station Connected Burglar Alarm Units and Systems
- UL1023 Household Burglar-Alarm System Units
- UL985 Household Fire Warning System Units
- UL1635 Digital Alarm Communicator System Units
- UL1637 Home Health Care Signaling Equipment
- ULC-S304-16 Rev1 Signal Receiving Centre & Premise Burglar Alarm Control Units
- ULC-S559-13 Equipment for Fire Signal Receiving Centers and Systems
- ULC-S545-02 Residential Fire Warning System Control Units
- ORD-C1023-1974 Household Burglar-Alarm System Units

This product has also been tested and found in compliance with the ANSI/SIA CP-01-2010 Control Panel Standard – Features for False Alarm Reduction. This product is UL/ULC listed under the following categories:

- AMCX/AMCXC Central Stations Alarm Units
- APAW Police-station-connected Alarm Units
- DAYRC Central Station Fire Alarm System Units
- UTOU/UTOUC Control Units and Accessories, Household System Type
- NBSX/NBSXC Household Burglar Alarm System Units

- AMTB Control Panels, SIA False Alarm Reduction

The product is labeled with the UL and ULC listing marks along with the SIA CP-01 compliance statement (Also Classified in accordance with SIA-CP-01 Standard) as proof of compliance with the above mentioned standards. For further information on this product's listings please also refer to the official listing guides published at the UL web site (www.ul.com) under Online Directions Section.

UL/ULC Residential Fire and Burglary Installations:

For ULC Installations refer to the Standard for the Installation of Residential Fire Warning Systems, CAN/ULC-S540.

- All burglary-type zones shall be configured with SEOL or DEOL configuration. Use model EOLR-2 (refer to section [002], bit 10 or 11 shall be ON)
- Use at least one PG9936/PG9926/PG9916 Smoke Detector for Fire Installations (section [001], fire zone shall be programmed as type 025)
- The entry delay shall not exceed 45 seconds (see section [005])
- The exit delay shall not exceed 60 seconds (refer to section [005])
- The minimum Bell Time-out is 4 minutes (refer to section [005])

Note: For UL Commercial Burglary installations, minimum bell time-out is 15 min.

- Temporal Three Fire Signal shall be enabled (section [013], option 8 ON)
- Arm/Disarm Bell Squawk shall be enabled when using wireless key PG4939/PG4929/PG4949 (section [014], option 1 shall be ON)
- A code shall be required for bypassing (section [023], option 4 shall be ON)
- Trouble beeps shall be enabled (section [022], option 7 shall be ON)
- For fire and CO applications, RM-1(C) or RM-2 power loop supervision relay shall be connected to Aux power output to report wiring faults if it is used for powering fire and CO detection devices. For wiring, see manual p/n: 29009812.
- AC trouble indication LED shall be enabled (Keypad Programming, section [022], options 5 and 6 shall be ON)
- DACT Communicator shall be enabled for Supervising Station Monitoring (section [380], option 1 shall be ON)
- For UL Residential Fire and burglary installations, a code shall be required to view the [*][2] trouble menu (Section [023], option 5 shall be ON)
- A test transmission shall be sent to the monitoring station every 7 days (Section [377][003] shall be set to 007; 007 is the default setting)
- For UL residential fire applications at least one LCD keypad (model HS2LCD(P), HS2LCDRF(P)9) or touchscreen keypad (Model HS2TCHP) shall be used.
- For UL Residential Fire and burglary installations, 2 UL listed compatible keypads (e.g. HS2LCD(P), HS2LCDRFP9, HS2TCHP) shall be used, each having communication bus wiring directly connected to the RED/BLK/YEL/GRN, located on the main control panel board assembly.

- For CO alarm notification, model PG9913 or PG9933 shall be enrolled on the system (zone type is 24h CO). Both CO detectors provide T4 CO alarm signal independent of the control unit and meet the 24 hour normal standby period followed by the 12 hour alarm period requirements. The control panel provides T4 audible CO alarm for at least 5 minutes following 24 hour normal standby.
- For UL Residential Fire applications, latching troubles shall be enabled (Section [019], Option 2 is ON).
- For UL Residential Fire applications, if a repeater is required, two of the model PG9920 shall be used for proper signal routing.
- For Fire and CO applications, a RM-1(C) or RM-2 power loop supervision relay shall be connected to Aux Power Output to report wiring faults if it is used for powering fire/CO detection devices (for wiring information see manual 29009812).

ⓘ **Note:** For UL Residential Fire applications compliant with UL985 6th edition, the following guidelines shall be respected when the equipment is used as a combination alarm system for fire and burglary protection:

- Fire alarm detection devices shall not be powered from the same AUX output (control panel, zone expander, power supply) as burglary alarm initiating devices.
- Power supply wiring for Fire Alarm Detection devices (Smoke Detectors, CO Detectors) shall be connected to the control panel AUX output (located on the main control panel board assembly).
- Power supply wiring for Burglary Alarm Initiating devices (Motion detectors, magnetic contacts, glass break detectors, etc.) shall be connected to the compatible Power Supply Module AUX outputs (located on the power supply module board assembly e.g. HSM2300, HSM2204) or expander module AUX outputs located on the expander module board assembly (e.g. HSM2108, HSM2208).

  ⓘ **Note:** The DACT communicator for this product has no line security.
- For Fire and CO applications, RM-1(C) or RM-2 power loop supervision relay shall be connected to Aux Power Output to report wiring faults if it is used for powering fire/CO detection devices.
- Telephone Line Monitoring (TLM) shall be enabled (section [015], option 7 shall be ON).

  ⓘ **Note:** This product is programmed to perform 5 (min.) to 10 (max.) attempts for communication of an event to the supervising station. If unsuccessful, a Fail To Communicate (FTC) trouble is generated.
- Test transmission cycle shall be set for monthly transmission (refer to section [351]).

  ⓘ **Note:** For ULC Residential/Commercial installations set for daily test transmission.
- Section [377][004] default time is programmed for 04:45am (0445). The panel generates a random test transmission time within a +/- 60 minute window.
- Wireless Supervision window shall be set to 4 hrs for Fire Installations (Wireless Programming, section [804]>[802] shall be programmed with the value 16).
- Wireless Supervision window shall be set to 4 hrs for Burglary Installations only (Wireless Programming, section [804]>[802] shall be programmed with the value 96).
- RF Jam detection shall be enabled (refer to Wireless Programming (section [804][801], option 00 shall be OFF).
- New Alarms will Disconnect 2-way Audio (section [022], option 6 OFF).

ULC Commercial Burglary

The following wireless PowerG devices models are ULC listed under ULC-S304 requirements for use in Commercial Burg applications rated for Security Level III.

PG9914	PG9929	PG9944	PG9984
PG9905	PG9934P	PG9945	PG9984P
PG9920	PG9935	PG9949	PG9985
PG9922	PG9938	PG9974	PG9994
PG9924	PG9939	PG9974P	

The wireless supervision window shall be set to 4h for such applications and the tamper detection for removal from mounting location shall be enabled.

UL Central Station and Police Connect with Standard or Encrypted Line Security Service

- The installation must use the Models TL2803G(R)E IP/3G Interface, 3G2080(R)E 3G Interface or TL280(R)E IP Interface, which communicates over Cellular Data Network or an Ethernet network 10/100BaseT to the compatible Sur-Gard System I/II/III/IV receiver
- Polling time shall be 200 seconds and compromise detection time shall be 6 min.
- For Encrypted line security applications, the Models TL2803G(R)E IP/3G Interface, 3G2080(R)E 3G Interface or TL280(R)E IP Interface shall have the Encryption Key enabled (AES128 bit encryption algorithm is validated under NIST Certificate No.2645
- Wireless Supervision window shall be enabled (refer to Wireless Programming, sections [804]>[802])

UL Local, Central Station, Police Connect with No Line Security Service

- The installation shall use a Bell UL Listed for Mercantile local alarms (e.g., Amseco Model MBL10B bell with Model AB-12 bell housing). Connections from the control unit to the bell shall be made in conduit. (Optional for central Station)
- The bell timeout shall be programmed for 15 minutes minimum
- At least one system remote keypad with tamper switch shall be employed
- The integral DACT shall be enabled and shall be programmed to provide a low battery transmission
- The control panel shall be in a separately listed CMC-1 or PC4050CA attack resistant enclosure
- The maximum entry delay time shall not exceed 45s as a result of the attack test. The maximum exit delay time shall not exceed 60 s.
- A tamper switch shall be used to protect the enclosure cover of the control unit, and shall also be used on the keypad rear to detect removal from the wall.
- 24 h check in transmission shall be enabled
- Open/Closing acknowledgement enabled (Not Police Station).
- The Installation shall use the internal dialer (DACT) alone or in conjunction with Models TL2803G(R)E IP/3G Interface, 3G2080(R)E 3G Interface or TL280(R)E IP Interface, which communicates over Cellular Data Network or an Ethernet network 10/100BaseT to the compatible Sur-Gard System I/II/III/IV receiver

UL Home Health Care Signaling Equipment

- There must be at least two keypads, one of either one of the compatible keypads models HS2LED, HS2LCD(P), HS2ICN(P), HS2LCDRF(P)9, HS2ICNRF(P)9 and HS2TCHP .
- Each system shall be programmed to activate an audible Trouble signal within 90 seconds upon loss of microprocessor memory.
- For UL Home Health Care installations, minimum bell time-out is 5 min.
- The HS2TCHP shall be used along with another compatible model keypad in order to provide audible supervision for homehealth care or medical installations.

ULC Central Station Fire and Burglary Monitoring Installations

- For installation requirements, levels of security, communication modules and configurations (Refer to the ULC Installation Information Sheet, DSC #29002157)
- Use a CSA/cUL approved transformer (hardwired connections required for Fire Monitoring)
- All tamper circuits may be connected to the same zone

Programming

The notes in the programming sections of the PowerSeries Neo Reference Manual describing the system configurations for UL/ULC listed installations shall be implemented.

Control of the Protected Premises

In order to have a UL certificated system, the protected area shall be under the responsibility of one ownership and management (i.e., one business under one name). This may be a group of buildings attached or unattached with different addresses but under the responsibility of someone having mutual interest. The person of mutual interest is not the alarm-installing company.

ⓘ **Note:** This does not apply to strip mall applications where each independent business must have their own separate alarm system. e.g.,1: A commercial partitioned system that has an office and a warehouse area in a building where each area can be armed or disarmed independently. e.g.2: A residential system partitioned so that the garage area is armed separately from the house. Each of the above examples is under the sole responsibility of a single owner. The bell and DACT power supply must be in a protected area including partitioned systems. The bell and DACT power supply must be located where it can be heard by the person or persons responsible for maintaining the security system during the daily arming cycle.

Bell Location

The alarm sounding device (bell) shall be located where it can be heard by the person operating the security system during the daily arming and disarming cycle.

Protection of the Control Unit

The local control unit and the local power supply must be protected in one of the following ways:

- The control unit and audible alarm device must be in a protected area which is armed 24 hours a day.
- Each partition must arm the area protecting the control unit and the audible alarm device power supply. This may require duplicate protection armed by each partition. Access to this protected area, without causing an alarm, will require that all partitions be disarmed.
- In all cases described above, the protected area for the control unit must be programmed as not-bypassable.

Casual Users

The installer should caution the user not to give system information (e.g., codes, bypass methods, etc.) to casual users (e.g., service people) and to only give out One-Time Use codes.

User Information

The installer should advise the user and note in the User's Manual:

- Service organization name and telephone number
- The programmed exit and entry time
- Instructions to test system weekly
- Note that the installer code cannot arm or disarm the system

Note: For UL Residential Fire applications compliant with UL985 6th edition, the following guidelines shall be respected when the equipment is used as a combination alarm system for fire and burglary protection:

- Fire alarm detection devices shall not be powered from the same AUX output (control panel, zone expander, power supply) as burglary alarm initiating devices.
- Power supply wiring for Fire Alarm Detection devices (Smoke Detectors, CO Detectors) shall be connected to the control panel AUX output (located on the main control panel board assembly).
- Power supply wiring for Burglary Alarm Initiating devices (Motion detectors, magnetic contacts, glass break detectors, etc.) shall be connected to the compatible Power Supply Modules AUX outputs (located on the power supply module board assembly e.g. HSM2300, HSM2204) or Expander Module AUX outputs(located on the expander module board assembly, for example, HSM2108, HSM2208.)

For fire and CO applications, RM-1 (C) or RM-2 power loop supervision relay shall be connected to Aux Power Output to report wiring faults if it is used for powering fire/CO devices.

Aux Loading and Battery Selection

HS2128/ HS2064/ HS2032/ HS2016-4 Board current draw 85mA	UL Residential Burg ULC Residential Burg	UL Commercial Burg	UL Resi Fire UL Home Health Care ULC Resi Fire ULC Com Burg	ULC Fire Monitoring	EN50131 Grade 2/Class II
Max AUX (NSC) current loading	0.7A	0.7A	0.5A*	0.5A	0.5A480mA
Max BELL (Alarm) current loading	0.7A	0.7A	0.7A	0.7A (no local alarm notification allowed, only remote transmission to SRC)	0.7A

UL/ULC Listed enclosure	PC500C PC5003C	CMC-1 PC4050CAR	PC5003C	PC5003C PC4050CR (red/ transfomer mounted inside)	PC5003C Power UC1
Transformer requirements	16.5V/40VA (plug in type) PTC1640U (USA) PTC1640CG (CAN)			FTC1637 (cUL listed) 16.5V/37VA (Hardwired type, mounted inside the enclosure or outside using electrical box)	16.5V/40VA (hardwired type, mounted inside the cabinet)
Battery Capacity requirements	7Ah	7Ah	14Ah (2 x 7Ah in parallel)	14Ah (2 x 7Ah in parallel)	7Ah
Standby Time	UL: 4 hours ULC: 24 hours	4 hours	24 hours	24 hours	12 hours
Alarm time	4 minutes	15 minutes	4 min (UL resi fire) 5 min (Home Health Care and ULC Resi Fire)	5 minutes (Alarm Transmission only)	N/A
Recharging current setting	400mA, 700mA	400mA, 700mA	400mA, 700mA	400mA, 700mA	400mA, 700mA

(*) For UL Residential Fire Installations, using hardwired CO Alarm Detectors, the maximum discharge current shall be limited to 250mA to ensure 24h standby operation followed by 4 minute CO alarm notification then followed by an additional 12h of CO Alarm notification.

SIA False Alarm Reduction Installations: Quick Reference

Minimum required system consists of one control unit model HS2128 or HS2064 or HS2032 or HS2016-4 and any one of the compatible listed keypads: HS2LCDRF9, HS2LCDRFP9, HS2ICNRF9, HS2ICNRFP9, HS2LCD, HS2LCDP, HS2ICN, HS2ICNP, HS2LED HS2TCHP.

The following wireless keys can also be used in SIA compatible installations: PG9929, PG9939,PG9949.

ⓘ **Note:** For models PG9929 and PG9939, the panic/emergency key shall be disabled for SIA compliant installations.

For a list of the default values programmed when the unit is shipped from the factory, and for other programming information, refer to the following table.

The following optional subassembly modules also bear the SIA CP-01-2010 classification and may be used if desired: HSM2108 zone expander, HSM2208 PGM output module, HSM2300 auxiliary power

supply, HSM2204 output module, HSM2HOST9 2-way wireless transceiver, PG9901 indoor siren, PG9911 outdoor siren, and 3G2080(R)E/ TL2803G(R)E/ TL280(R)E cellular and PSDN communication module.

Caution

- For SIA FAR installations use only modules/devices that are listed on this page.
- Fire Alarm Verification feature (Auto Verified Fire Zone type [025]) is not supported on 2-wire smoke detectors zones. This feature may be enabled for 4-wire smoke detectors only and wireless detectors PG9936. The fire alarm delay is 60s.
- Call Waiting Cancel (Section [382], option 4) on a non-Call Waiting line will prevent successful communication to the supervising station.
- All system smoke detectors must be tested annually by conducting an Installer Walk Test. Prior to exiting Walk Test mode, a sensor reset must be done on the system, [*][7][2], to reset all latching 4-wire smoke detectors. Refer to the installation instructions supplied with the detector for details.

Notes

- Programming at installation may be subordinate to other UL requirements for the intended application.
- Cross zones have the ability to individually protect the intended area (e.g. motion detectors which overlap).
- Cross zoning is not recommended for line security Installations nor is it to be implemented on exit/entry zones.
- This control panel has a communication delay of 30 seconds. It can be removed or increased up to 45 seconds by the end user with installer consultation.
- The system shall be installed with the sounding device activated and the communicator enabled for transmission using SIA or CID format.
- ULC commercial burglary installations require DEOL resistors.

SIA quick reference table

SIA Feature Programming Section	Comments	Range/Default	Requirement
Exit Time [005]>[001], option 3	Access to Entry and Exit delays and Bell Time Out for the system.	Range:45- 255 seconds Default: 60 sec.	Required (programmable)
Exit Delay Restart [018], option 7	Opening a Delay zone door after it has already been opened and closed during an exit delay restarts the exit delay timer.	Default: Enabled	Required

Auto Stay Arm on Un-vacated Premises [001]>[001]-[128] Zone type 05, 06,09	Function key: Forces the system to arm in Stay mode if the occupant does not exit the premises after pressing the Away function key.	If no exit after full arm Default: Enabled	Required
Exit Time and Progress Annunciation/Disable or Remote Arming [861]>[001]-[005], option 4	System times and audible exit beeps can be disabled when using the wireless key to stay arm the system. When away arming, audible exit beeps can not be disabled.	Default: Enabled	Allowed
Entry delay(s) [005]>[001]-[008], options 1 and 2	Access to entry and exit delays and bell time out for the system ⓘ **Note:** Combined entry delay and communications delay (abort window) shall not exceed 60s.	Range: 30 sec. to 4 min. Default: 30 sec.	Required (programmable)
Abort Window for Non-Fire zones [002]>[001]-[128], option 7 ON	Access to zone attributes, i.e., swinger shutdown, transmission delay and cross zone. May be disabled by zone or zone type.	Default: Enabled	Required
Abort Window Time - for Non-Fire zones [377]>[002], option 1	Access to the programmable delay before communicating alarms ⓘ **Note:** Combined entry delay and communications delay (abort window) shall not exceed 60 seconds.	Range: 00 - 45 sec. Default: 30 sees	Required (programmable)
Abort Annunciation	An audible tone is generated when an alarm is aborted during the abort window.	Hard-coded ON	Required

Duress Feature [*][5]> master code> user 2-95> 5> 2	When this feature is enabled, selected user codes send a duress reporting code to the central station when used to perform any function on the system. Section [019], option [6] must be enabled.	Default: N	Required
Cancel Window [377]>[002], option 6	Access to the communications cancel window. Minimum duration must be 5 minutes.	Range: 005-255 Default: 005	
Cancel Annunciation [308]>[001], option 8	Access to the reporting code for Alarm Canceled.	A Cancel was transmitted Default: Enabled	Required
Cross Zoning [042]>Selection 3, option 002	Enables cross zoning for entire system. Zones can be enabled for cross zoning via zone attribute option 8 in sections [002][101] - [128].	Programming required Default: Disabled	Required
Burglary Verification Timer [005]>[000], option 3	Access to the programmable Cross Zone timer.	Range: 000-255 sec. Default: 60 seconds	Allowed
Swinger Shutdown for Alarms [377]>[001], option 1	Access to the swinger shutdown limit for zone alarms For all non-fire zones, shut down at 1 to 6 trips.	Default: 2 trips	Required (programmable)
Swinger Shutdown Enable [002]>[001] - [128], option 6 ON	Access to swinger shutdown, transmission delay and cross zone attributes. Zone attribute option 6 (Swinger Shutdown enabled) is ON.	Non-police response zones Default: Enabled	Allowed
24-Hr. Auto-verified Fire [001]>[001]-[128], Zone type 025 ON	Access to 24-Hr. Auto-verified Fire Activates if Not restored within the specified time.	Must choose zone type for application	Required

Call Waiting Cancel [382], option 4 OFF	Access to the dialing sequence used to disable call waiting. Call waiting string can be programmed in [304]	Depends on user phone line Default: Disabled	Required
System Test: [*][6] Master Code, option 04	The system activates all keypad sounders, bells or sirens for 2 seconds and all keypad lights turn on. Refer to user manual.		
Walk Test Mode: [*][8][Installer code] [901]	This mode is used to test each zone on the system for proper functionality.		
Walk Test Communications [382], option 2	Enables communication of zone alarms while walk test is active.	Default: Disabled	
Walk Test Start/ End Reporting Codes [308][401], options 1 and 2	Access to the reporting codes for walk test start and end times.		

EU Compliance Statement

This product meets the requirements of Class II, Grade 2 equipment as per EN50131-1: 2006+A1:2009, EN50131-3:2009, EN50131-6:2008+A1:2014 (Type A), EN50136-1-1:1997, EN50136-2-1, EN50136-2-3 (ATS2) Standards.

This device is suitable for use in systems with the following notification options.

- A (use of two warning devices and internal dialer required
- B (self-powered warning device and internal dialer required
- C (use of DSC compatible alternate communicator in back-up or redundant mode)
- D (use of DSC compatible alternate communicator with encryption enabled required.)

For EN50131 compliant installations only the intrusion portion of the alarm system has been investigated. Fire Alarm and Auxiliary (Medical) Alarm functions were not included in the evaluation of this product under the requirements of the above mentioned standards.

Additional features implemented for EN 50131 Grade 2:

- Fire alarm and CO alarm annunciation
- Auxiliary (medical) alarm annunciation
- Optional feature implemented for EN 50131 Grade 2:
- Removal from mounting tamper detection for non wire-free components

The models HS2128, HS2064, HS2032, HS2016 Control Panel has been certified by Telefication according to EN50131-1:2006 +A1:2009, EN50131-3:2009, EN50131-6:2008+A1:2017 (Type A) and EN50136-1:1997 (ATS2) for Grade 2, Class II.

Compliance labeling should be removed or adjusted if non-compliant configurations are selected.

This product (HS2128/HS2064/HS2032/HS2016) is in conformity with the Electromagnetic Compatibility Directive 2014/30/EU, the Low Voltage Directive 2014/35/EU, and the ROHS3 Directive 2011/65/EU.

The product is labelled with the CE mark as proof of compliance with the applicable European Directives. Also a CE declaration of conformity (DoC) for this product can be found at http://www.dsc.com under Agency Listings section.

Important Notes for EN50131-1 compliant systems

Important Notes for EN50131-1 compliant systems

The HS2128, HS2064, HS2032, HS2016 Control Panel has been certified by Telefication according to EN50131-1:2006 +A1:2009, EN50131-3:2009, EN50131-6:2008+A:2017 (Type A) and EN50136-1:1997 (ATS2) for Grade 2, Class II.

For EN50131 compliant installations, with alarm control panels HS2128, HS2064, HS2032 and HS2016, only the intrusion portion of the alarm system may be activated.

For EN50131 compliant installations the following functions have to be disabled:

- Fire Alarm,
- CO Alarm
- Auxiliary (Medical) Alarm functions

For EN50131 compliant installations the following zone types shall not be used:

007 – Delayed 24-Hour Fire	047 – 24-Hour Emergency
008 – Standard 24-Hour Fire	048 – 24-Hour Sprinkler
025 – Auto Verified Fire	049 – 24-Hour Flood
027 – Fire Supervisory	052 – 24-Hour Non-Alarm
040 – 24-Hour Gas	056 – 24-Hour High Temperature
041 – 24-Hour CO	057 – 24 Hour Low Temperature
045 – 24-Hour Heat	071 – Door Bell
046 – 24-Hour Medical	

In this configuration there are no non-mandatory events generated in the event buffer and compliance with minimum 250 events mandatory events storage (Grade 2) is ensured as per 8 - FTC Audible Bell.10.1 in EN50131-3. Compliance labeling should be removed or adjusted if non-compliant configurations are selected.

Australia / New Zealand Regulatory Compliance

New Zealand Telepermit Grant

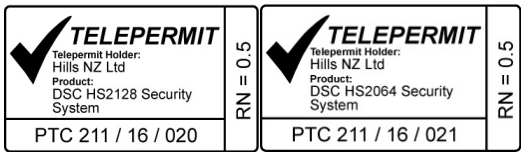

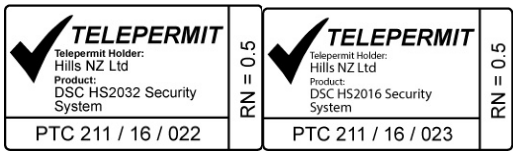

UK Compliance Statement

In the UK this product is suitable for use in systems installed to conform to PD 6662:2017 at Grade 3 and environmental class II with the following notification options: A, B, C, D, E.

Where HS3032, HS3128, and HS3248 are used with a single path signaling method (such as the Integrated Digital Dialer), please note the following limitation:

Important

Your attention is drawn to the fact that failure or compromise of single path signaling cannot be passed to the police. While the failure persists, subsequent alarms cannot be notified to the alarm receiving centre and passed to the police.

Setting Methods

The HS3032, HS3128, and HS3248 are capable of supporting the completion of the full setting procedure by the following methods:

a) push button switch, mounted outside the supervised premises; or b) protective switch (i.e., door contact) fitted to the final exit door of the alarmed premises or area. The setting procedure is a two-stage process of initiating the setting procedure within the supervised premises (e.g., using Mini Prox Tag (MPT) or user code) followed by completion of setting by one of the two methods mentioned above. Please check with the Installer which method has been enabled for your system.

Unsetting Methods

The HS3032, HS3128, and HS3248 are capable of supporting the following unsetting methods in accordance with BS8243:

6.4.2 Prevention of entry to the supervised premises before the alarm system is unset. Unsetting using remote key before entering the supervised premises causes or permits the initial entry door to be unlocked.

6.4.5 Completion of unsetting using a digital key (e.g., MPT or PG8929, PG8939, PG8949) either before entering the protected premises (use PG8929, PG8939, PG8949) or after entering the protected premises (use MPT). The entry delay is activated if the initial entry door is opened before the HS3032, HS3128, HS3248 has been unset. During the entry time, it is possible to unset the alarm system using a digital key only. Complete unsetting before programmed entry delay expires.

Important

If using a remote device to remotely set/unset your intruder alarm system, your attention is drawn to the fact that whenever a premises is unattended but its intruder alarm system(s) is (are) not fully set, any related insurance cover might be inoperative. For advice on this matter, it is recommended that you consult your insurer(s).”

Specifications For EN50131

Specifications

Zone Configuration

- 16, 32, 64, or 128 wireless zones supported and up to 8 hardwired zones available on the controller
- zone types and 14 programmable zone attributes
- Zone configurations available: normally closed, single EOL and DEOL supervised
- Hardwired zone expansion (fully supervised) available using the model HSM2108 (eight zone expander module)
- Wireless zone expansion (fully supervised) available using the HSM2Host 2-way wireless integration module operating at 915MHz (North America), 433MHz (Europe) and 868MHz (international)

Access Codes

- Up to 1002 access codes: 1000 (level 2-EN), one installer code (level 3-EN), and one maintenance code
- Programmable attributes for each user code (Access Code Attributes)
- When using 8-digit access codes, the minimum number of variations are:
  - HS2016-4: 2083333

    HS2032: 1388888

    HS2064/HS2128: 1052631

    HS2064 E: 200000

    HS2128 E: 100000

Warning Device Output

- Integral sounder capable of 85 dB @ 3m, self-powered type Z
- remote, wireless indoor/outdoor warning devices supported: models PGX901 (indoor), PGX911 (outdoor) (X=4, 8, or 9)
- Programmable as steady, pulsed or temporal three (as per ISO8201) and temporal four (CO alarm) output
- Warning device sounds alarms in the following priority: fire, CO, burg

ⓘ **Note:** For NFA2P certified systems the delay for operating the warning device shall be set to max. 10 min.

Memory

- CMOS EEPROM memory
- Retains programming and system status on AC or battery failure for 20 years min. (not verified by UL)

Power Supply - North America

Transformer: DSC PTD1640U, PTC1640U,PTC1640UG, PTC1640CG

Primary: 120V, 60Hz Class II

Secondary: 16.5VAC, 40VA Max.

Power Supply - International

- Input ratings: 220V-240Vac, 50/60Hz, 200mA
- Transformer required, mounted in the same enclosure, permanently connected
- Transformer secondary ratings: 16.5Vac, 40VA min.

ⓘ **Note:** For installations using the transformer mounted inside the cabinet, replace fuse only with the same type (20mm) rated 250V/315mA.

Regulated power supply:

- 7A regulated, supervised and integral to the control unit
- Type A as per EN50131-6 Standard

  - 700mA auxiliary supply, 12V DC
  - Positive temperature coefficient (PTC) for Bell, Aux+ and Battery terminals
  - Reverse battery detection/protection
  - Supervision for AC power and low battery
  - Normal and high current battery charge options
  - Supervised battery charging circuit

Current draw (panel):

- 85mA (nominal) 2A(Max)

Bell Output:

- 12V, 700mA supervised (1k Ohm) bell output (current limited at 2 amps)
- Steady, Pulsed, Temporal 3 fire, Temporal 4 CO alarm cadences
- Bell short detection (software + hardware)

Aux+:

- Voltage range = 9.6V - 13.8V DC
- Current = 700mA (shared with Corbus R(ed))
- Output ripple voltage: 270mVp-p max.
- Onboard programmable outputs:

  - PGM 1 - 50mA switched programmable output
  - PGM 2 - 300mA current-limited switched programmable output. 2-Wire smoke detectors (90mA current limited) are supported using this PGM
  - PGM 3 - 50mA switched programmable output
  - PGM 4 - 50mA switched programmable output
  - Hardware PGM over current protection

Battery

- 12V sealed lead acid, rechargeable
- Battery capacity:

  - hours (UL commercial burglary/residential burglary),
  - hours (EN50131),
  - hours (UL/ULC resi fire, ULC com burglary, ULC com fire monitoring - no bell load allowed) INCERT [Belgium]

  ⓘ **Note:** For T 014 compliance (INCERT certification), only 14Ah (2x7Ah) batteries were tested and are accepted for INCERT certified systems.

- Maximum standby time: 24 hours (with 14Ah battery and Aux current limited to 470mA)
- Recharging time to 80% 72 hours
- Recharging rate: 240mA (12 hours max.), 480mA (24 hour backup)
- Backup time: 24 hours (UL)
- Battery lifespan: 3-5 years
- Low battery trouble indication threshold 11.5VDC
- Battery restore voltage 12.5V
- Main board current draw (battery only):

  - HS2016-4/32/64/128 (no alternate communicator) standby 85mA DC
  - HS2016-4/32/64/128, (including alternate communicator) standby 190mA DC
  - Transmit (alternate communicator module) 195mA DC

- Resettable fuses (PTC) used on circuit board
- Supervision for loss of primary power source (AC fail), battery loss or battery low voltage (battery trouble) with indication provided on the keypad
- Internal clock locked to AC power frequency

Operating Environmental Conditions

- Temperature range: UL= 0°C to +49°C (32°F-120°F), EN= -10°C to 55°C (50°F-131°F)
- Relative humidity: <93% non condensing

Alarm Transmitter Equipment (ATE) Specification

- Digital dialer integral to the main control board
- Supports SIA and Contact ID
- Complies with TS203 021-1, -2, -3 Telecom equipment requirements and EN50136-1-1, EN50136-2-1, EN50136-2-3 ATS 2
- Optional Dual IP/Cellular communicators (3G2080(R)E/ TL2803G(R)E/ TL280(R)E) can be installed in the same enclosure and configured as primary or back-up, with AES 128-bit encryption
- Compliant with EN50136-1-1, EN50136-2-1 ATS2 requirements

System Supervision Features

The PowerSeries Neo continuously monitors a number of possible trouble conditions and provides audible and visual indication at the keypad. Trouble conditions include:

- AC power failure
- Zone trouble
- Fire trouble
- Telephone line trouble
- Communicator trouble
- Low battery condition
- RF jam
- AUX power supply fault
- Failure to communicate
- Module fault (supervisory or tamper)

Additional Features

- 2-way wireless device support
- Visual verification (images + audio)*
- Proximity tag support
- PGM scheduling
- Quick arming
- User, partition, module, zone and system labels
- Soak test*
- Programmable system loop response
- Keypad and panel software versions viewable through keypad
- Doorbell zone type
- Low battery PGM type

*Feature not evaluated by UL/ULC.

Locating Detectors and Escape Plan

About this task:
The following information is for general guidance only and it is recommended that local fire codes and regulations be consulted when locating and installing smoke and CO alarms.
Smoke Detectors
Research has shown that all hostile fires in homes generate smoke to a greater or lesser extent. Experiments with typical fires in homes indicate that detectable quantities of smoke precede detectable levels of heat in most cases. Smoke alarms should be installed outside of each sleeping area and on each storey of the home.
It is recommended that additional smoke alarms beyond those required for minimum protection be installed. Additional areas that should be protected include: the basement; bedrooms, especially where smokers sleep; dining rooms; furnace and utility rooms; and any hallways not protected by the required units. On smooth ceilings, detectors may be spaced 9.1m (30 feet) apart as a guide. Other spacing may be required depending on ceiling height, air movement, the presence of

joists, uninsulated ceilings, etc. Consult National Fire Alarm Code NFPA 72, CAN/ULC-S553 or other appropriate national standards for installation recommendations.

- Do not locate smoke detectors at the top of peaked or gabled ceilings; the dead air space in these locations may prevent the unit from detecting smoke.
- Avoid areas with turbulent air flow, such as doorways, fans or windows. Rapid air movement around the detector may prevent smoke from entering the unit.
- Do not locate detectors in areas of high humidity.
- Do not locate detectors in areas where the temperature rises above 38ºC (100ºF) or falls below 5ºC (41ºF).
- Smoke detectors should always be installed in USA in accordance with Chapter 29 of NFPA 72, the National Fire Alarm Code.

Where required by applicable laws, codes, or standards for a specific type of occupancy, approved single- and multiple-station smoke alarms shall be installed as follows:

1. In all sleeping rooms and guest rooms.
2. Outside of each separate dwelling unit sleeping area, within 6.4 m (21 ft) of any door to a sleeping room, the distance measured along a path of travel.
3. On every level of a dwelling unit, including basements.
4. On every level of a residential board and care occupancy (small facility), including basements and excluding crawl spaces and unfinished attics.
5. In the living area(s) of a guest suite.
6. In the living area(s) of a residential board and care occupancy (small facility).

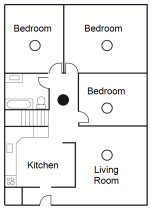

Figure 1

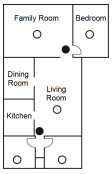

Figure 2

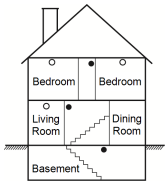

Figure 3

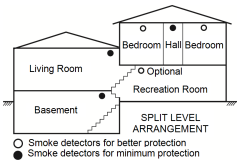

Figure 3a

Figure 4

Fire Escape Planning

There is often very little time between the detection of a fire and the time it becomes deadly. It is thus very important that a family escape plan be developed and rehearsed.

1. Every family member should participate in developing the escape plan.

2. Study the possible escape routes from each location within the house. Since many fires occur at night, special attention should be given to the escape routes from sleeping quarters.
3. Escape from a bedroom must be possible without opening the interior door.

Result

Consider the following when making your escape plans:

- Ensure all border doors and windows are easily opened. Ensure that they are not painted shut, and the locking mechanisms operate smoothly.
- If opening or using the exit is too difficult for children, the elderly or handicapped, plans for rescue should be developed. This includes making sure that those who are to perform the rescue can promptly hear the fire warning signal.
- If the exit is above the ground level, an approved fire ladder or rope should be provided as well as training in its use.
- Exits on the ground level should be kept clear. Be sure to remove snow from exterior patio doors in winter; outdoor furniture or equipment should not block exits.
- Each person should know the predetermined assembly point where everyone can be accounted for (e.g., across the street or at a neighbor's house). Once everyone is out of the building, call the fire department.
- A good plan emphasizes quick escape. Do not attempt to fight the fire, and do not gather belongings as this can waste valuable time. Once outside, do not re-enter the house. Wait for the fire department.
- Write the fire escape plan down and rehearse it frequently so that should an emergency arise, everyone will know what to do. Revise the plan as conditions change, such as the number of people in the home, or if there are changes to the building’s construction.
- Make sure your fire warning system is operational by conducting weekly tests. If you are unsure about system operation, contact your installer.
- We recommend that you contact your local fire department and request further information on fire safety and escape planning. If available, have your local fire prevention officer conduct an in-house fire safety inspection.

Carbon Monoxide Detectors

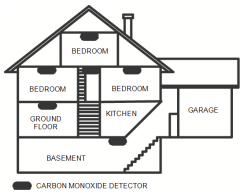

Figure 5

Carbon monoxide is colorless, odorless, tasteless, and very toxic, it also moves freely in the air. CO detectors can measure the concentration and sound a loud alarm before a potentially harmful level is reached. The human body is most vulnerable to the effects of CO gas during sleeping hours; therefore, CO detectors should be located in or as near as possible to sleeping areas of the home. For maximum protection, a CO alarm should be located outside primary sleeping areas or on each level of your home. Figure 5 indicates the suggested locations in the home.

Do NOT place the CO alarm in the following areas:

- Where the temperature may drop below -10ºC or exceed 40ºC

- Near paint thinner fumes
- Within 5 feet (1.5m) of open flame appliances such as furnaces, stoves and fireplaces
- In exhaust streams from gas engines, vents, flues or chimneys
- In close proximity to an automobile exhaust pipe; this will damage the detector

PLEASE REFER TO THE CO DETECTOR INSTALLATION AND OPERATING INSTRUCTION SHEET FOR SAFETY INSTRUCTIONS AND EMERGENCY INFORMATION.

Limited Warranty

Digital Security Controls warrants the original purchaser that for a period of twelve months from the date of purchase, the product shall be free of defects in materials and workmanship under normal use. During the warranty period, Digital Security Controls shall, at its option, repair or replace any defective product upon return of the product to its factory, at no charge for labour and materials. Any replacement and/or repaired parts are warranted for the remainder of the original warranty or ninety (90) days, whichever is longer. The original purchaser must promptly notify Digital Security Controls in writing that there is defect in material or workmanship, such written notice to be received in all events prior to expiration of the warranty period. There is absolutely no warranty on software and all software products are sold as a user license under the terms of the software license agreement included with the product. The Customer assumes all responsibility for the proper selection, installation, operation and maintenance of any products purchased from DSC. Custom products are only warranted to the extent that they do not function upon delivery. In such cases, DSC can replace or credit at its option.

International Warranty

The warranty for international customers is the same as for any customer within Canada and the United States, with the exception that Digital Security Controls shall not be responsible for any customs fees, taxes, or VAT that may be due.

Warranty Procedure

To obtain service under this warranty, please return the item(s) in question to the point of purchase. All authorized distributors and dealers have a warranty program. Anyone returning goods to Digital Security Controls must first obtain an authorization number. Digital Security Controls will not accept any shipment whatsoever for which prior authorization has not been obtained.

Conditions to Void Warranty

This warranty applies only to defects in parts and workmanship relating to normal use. It does not cover:

- damage incurred in shipping or handling;
- damage caused by disaster such as fire, flood, wind, earthquake or lightning;
- damage due to causes beyond the control of Digital Security Controls such as excessive voltage, mechanical shock or water damage;
- damage caused by unauthorized attachment, alterations, modifications or foreign objects;
- damage caused by peripherals (unless such peripherals were supplied by DSC.);
- defects caused by failure to provide a suitable installation environment for the products;
- damage caused by use of the products for purposes other than those for which it was designed;
- damage from improper maintenance;

- damage arising out of any other abuse, mishandling or improper application of the products.

Items Not Covered by Warranty

In addition to the items which void the Warranty, the following items shall not be covered by Warranty: (i) freight cost to the repair centre; (ii) products which are not identified with DSC's product label and lot number or serial number; (iii) products disassembled or repaired in such a manner as to adversely affect performance or prevent adequate inspection or testing to verify any warranty claim. Access cards or tags returned for replacement under warranty will be credited or replaced at DSC's option. Products not covered by this warranty, or otherwise out of warranty due to age, misuse, or damage shall be evaluated, and a repair estimate shall be provided. No repair work will be performed until a valid purchase order is received from the Customer and a Return Merchandise Authorization number (RMA) is issued by DSC's Customer Service.

Digital Security Controls Ltd.'s liability for failure to repair the product under this warranty after a reasonable number of attempts will be limited to a replacement of the product, as the exclusive remedy for breach of warranty. Under no circumstances shall Digital Security Controls be liable for any special, incidental, or consequential damages based upon breach of warranty, breach of contract, negligence, strict liability, or any other legal theory. Such damages include, but are not limited to, loss of profits, loss of the product or any associated equipment, cost of capital, cost of substitute or replacement equipment, facilities or services, down time, purchaser's time, the claims of third parties, including customers, and injury to property. The laws of some jurisdictions limit or do not allow the disclaimer of consequential damages. If the laws of such a jurisdiction apply to any claim by or against DSC, the limitations and disclaimers contained here shall be to the greatest extent permitted by law. Some states do not allow the exclusion or limitation of incidental or consequential damages, so that the above may not apply to you.

Disclaimer of Warranties

This warranty contains the entire warranty and shall be in lieu of any and all other warranties, whether expressed or implied (including all implied warranties of merchantability or fitness for a particular purpose) and of all other obligations or liabilities on the part of Digital Security Controls. Digital Security Controls neither assumes responsibility for, nor authorizes any other person purporting to act on its behalf to modify or to change this warranty, nor to assume for it any other warranty or liability concerning this product. This disclaimer of warranties and limited warranty are governed by the laws of the province of Ontario, Canada.

⚠ **WARNING:** Digital Security Controls recommends that the entire system be completely tested on a regular basis. However, despite frequent testing, and due to, but not limited to, criminal tampering or electrical disruption, it is possible for this product to fail to perform as expected.

Out of Warranty Repairs

Digital Security Controls will at its option repair or replace out-of-warranty products which are returned to its factory according to the following conditions. Anyone returning goods to Digital Security Controls must first obtain an authorization number. Digital Security Controls will not accept any shipment whatsoever for which prior authorization has not been obtained.

Products which Digital Security Controls determines to be repairable will be repaired and returned. A set fee which Digital Security Controls has predetermined and which may be revised from time to time, will be charged for each unit repaired. Products which Digital Security Controls determines not to be repairable will be replaced by the nearest equivalent product available at that time. The current market price of the replacement product will be charged for each replacement unit.

WARNING - READ CAREFULLY - Note to Installers

This warning contains vital information. As the only individual in contact with system users, it is your responsibility to bring each item in this warning to the attention of the users of this system.

System Failures

This system has been carefully designed to be as effective as possible. There are circumstances, however, involving fire, burglary, or other types of emergencies where it may not provide protection. Any alarm system of any type may be compromised deliberately or may fail to operate as expected for a variety of reasons. Some but not all of these reasons may be:

Inadequate Installation

A security system must be installed properly in order to provide adequate protection. Every installation should be evaluated by a security professional to ensure that all access points and areas are covered. Locks and latches on windows and doors must be secure and operate as intended. Windows, doors, walls, ceilings and other building materials must be of sufficient strength and construction to provide the level of protection expected. A reevaluation must be done during and after any construction activity. An evaluation by the fire and/or police department is highly recommended if this service is available.

Criminal Knowledge

This system contains security features which were known to be effective at the time of manufacture. It is possible for persons with criminal intent to develop techniques which reduce the effectiveness of these features. It is important that a security system be reviewed periodically to ensure that its features remain effective and that it be updated or replaced if it is found that it does not provide the protection expected.

Access by Intruders

Intruders may enter through an unprotected access point, circumvent a sensing device, evade detection by moving through an area of insufficient coverage, disconnect a warning device, or interfere with or prevent the proper operation of the system.

Power Failure

Control units, intrusion detectors, smoke detectors and many other security devices require an adequate power supply for proper operation. If a device operates from batteries, it is possible for the batteries to fail. Even if the batteries have not failed, they must be charged, in good condition and installed correctly. If a device operates only by AC power, any interruption, however brief, will render that device inoperative while it does not have power. Power interruptions of any length are often accompanied by voltage fluctuations which may damage electronic equipment such as a security system. After a power interruption has occurred, immediately conduct a complete system test to ensure that the system operates as intended.

Failure of Replaceable Batteries

This system’s wireless transmitters have been designed to provide several years of battery life under normal conditions. The expected battery life is a function of the device environment, usage and type. Ambient conditions such as high humidity, high or low temperatures, or large temperature fluctuations may reduce the expected battery life. While each transmitting device has a low battery monitor which identifies when the batteries need to be replaced, this monitor may fail to operate as expected. Regular testing and maintenance will keep the system in good operating condition.

Compromise of Radio Frequency (Wireless) Devices

Signals may not reach the receiver under all circumstances which could include metal objects placed on or near the radio path or deliberate jamming or other inadvertent radio signal interference.

System Users

A user may not be able to operate a panic or emergency switch possibly due to permanent or temporary physical disability, inability to reach the device in time, or unfamiliarity with the correct operation. It is important that all system users be trained in the correct operation of the alarm system and that they know how to respond when the system indicates an alarm.

Smoke Detectors

Smoke detectors that are a part of this system may not properly alert occupants of a fire for a number of reasons, some of which follow. The smoke detectors may have been improperly installed or positioned. Smoke may not be able to reach the smoke detectors, such as when the fire is in a chimney, walls or roofs, or on the other side of closed doors. Smoke detectors may not detect smoke from fires on another level of the residence or building.

Every fire is different in the amount of smoke produced and the rate of burning. Smoke detectors cannot sense all types of fires equally well. Smoke detectors may not provide timely warning of fires caused by carelessness or safety hazards such as smoking in bed, violent explosions, escaping gas, improper storage of flammable materials, overloaded electrical circuits, children playing with matches or arson.

Even if the smoke detector operates as intended, there may be circumstances when there is insufficient warning to allow all occupants to escape in time to avoid injury or death.

Motion Detectors

Motion detectors can only detect motion within the designated areas as shown in their respective installation instructions. They cannot discriminate between intruders and intended occupants. Motion detectors do not provide volumetric area protection. They have multiple beams of detection and motion can only be detected in unobstructed areas covered by these beams. They cannot detect motion which occurs behind walls, ceilings, floor, closed doors, glass partitions, glass doors or windows. Any type of tampering whether intentional or unintentional such as masking, painting, or spraying of any material on the lenses, mirrors, windows or any other part of the detection system will impair its proper operation.

Passive infrared motion detectors operate by sensing changes in temperature. However their effectiveness can be reduced when the ambient temperature rises near or above body temperature or if there are intentional or unintentional sources of heat in or near the detection area. Some of these heat sources could be heaters, radiators, stoves, barbeques, fireplaces, sunlight, steam vents, lighting and so on.

Warning Devices

Warning devices such as sirens, bells, horns, or strobes may not warn people or waken someone sleeping if there is an intervening wall or door. If warning devices are located on a different level of the residence or premise, then it is less likely that the occupants will be alerted or awakened. Audible warning devices may be interfered with by other noise sources such as stereos, radios, televisions, air conditioners or other appliances, or passing traffic. Audible warning devices, however loud, may not be heard by a hearing-impaired person.

Telephone Lines

If telephone lines are used to transmit alarms, they may be out of service or busy for certain periods of time. Also an intruder may cut the telephone line or defeat its operation by more sophisticated means which may be difficult to detect.

Insufficient Time

There may be circumstances when the system will operate as intended, yet the occupants will not be protected from the emergency due to their inability to respond to the warnings in a timely manner. If the system is monitored, the response may not occur in time to protect the occupants or their belongings.

Component Failure

Although every effort has been made to make this system as reliable as possible, the system may fail to function as intended due to the failure of a component.

Inadequate Testing

Most problems that would prevent an alarm system from operating as intended can be found by regular testing and maintenance. The complete system should be tested weekly and immediately after a break-in, an attempted break-in, a fire, a storm, an earthquake, an accident, or any kind of

construction activity inside or outside the premises. The testing should include all sensing devices, keypads, consoles, alarm indicating devices and any other operational devices that are part of the system.

Security and Insurance

Regardless of its capabilities, an alarm system is not a substitute for property or life insurance. An alarm system also is not a substitute for property owners, renters, or other occupants to act prudently to prevent or minimize the harmful effects of an emergency situation.

Software Product License (EULA)

The SOFTWARE PRODUCT is protected by copyright laws and international copyright treaties, as well as other intellectual property laws and treaties. The SOFTWARE PRODUCT is licensed, not sold.

1. GRANT OF LICENSE This EULA grants You the following rights:

(a) Software Installation and Use - For each license You acquire, You may have only one copy of the SOFTWARE PRODUCT installed.

(b) Storage/Network Use - The SOFTWARE PRODUCT may not be installed, accessed, displayed, run, shared or used concurrently on or from different computers, including a workstation, terminal or other digital electronic device (“Device”). In other words, if You have several workstations, You will have to acquire a license for each workstation where the SOFTWARE will be used.

(c) Backup Copy - You may make back-up copies of the SOFTWARE PRODUCT, but You may only have one copy per license installed at any given time. You may use the back-up copy solely for archival purposes. Except as expressly provided in this EULA, You may not otherwise make copies of the SOFTWARE PRODUCT, including the printed materials accompanying the SOFTWARE.

2. DESCRIPTION OF OTHER RIGHTS AND LIMITATIONS

(a) Limitations on Reverse Engineering, Decompilation and Disassembly - You may not reverse engineer, decompile, or disassemble the SOFTWARE PRODUCT, except and only to the extent that such activity is expressly permitted by applicable law notwithstanding this limitation. You may not make any changes or modifications to the Software, without the written permission of an officer of DSC. You may not remove any proprietary notices, marks or labels from the Software Product. You shall institute reasonable measures to ensure compliance with the terms and conditions of this EULA.

(b) Separation of Components - The SOFTWARE PRODUCT is licensed as a single product. Its component parts may not be separated for use on more than one HARDWARE unit.

(c) Single INTEGRATED PRODUCT - If You acquired this SOFTWARE with HARDWARE, then the SOFTWARE PRODUCT is licensed with the HARDWARE as a single integrated product. In this case, the SOFTWARE PRODUCT may only be used with the HARDWARE as set forth in this EULA.

(d) Rental - You may not rent, lease or lend the SOFTWARE PRODUCT. You may not make it available to others or post it on a server or web site.

(e) Software Product Transfer - You may transfer all of Your rights under this EULA only as part of a permanent sale or transfer of the HARDWARE, provided You retain no copies, You transfer all of the SOFTWARE PRODUCT (including all component parts, the media and printed materials, any upgrades and this EULA), and provided the recipient agrees to the terms of this EULA. If the SOFTWARE PRODUCT is an upgrade, any transfer must also include all prior versions of the SOFTWARE PRODUCT.

(f) Termination - Without prejudice to any other rights, DSC may terminate this EULA if You fail to comply with the terms and conditions of this EULA. In such event, You must destroy all copies of the SOFTWARE PRODUCT and all of its component parts.

(g) Trademarks - This EULA does not grant You any rights in connection with any trademarks or service marks of DSC or its suppliers.

3. COPYRIGHT - All title and intellectual property rights in and to the SOFTWARE PRODUCT (including but not limited to any images, photographs, and text incorporated into the SOFTWARE PRODUCT), the accompanying printed materials, and any copies of the SOFTWARE PRODUCT, are owned by DSC or its suppliers. You may not copy the printed materials accompanying the SOFTWARE PRODUCT. All title and intellectual property rights in and to the content which may be accessed through use of the SOFTWARE PRODUCT are the property of the respective content owner and may be protected by applicable copyright or other intellectual property laws and treaties. This EULA grants You no rights to use such content. All rights not expressly granted under this EULA are reserved by DSC and its suppliers.

4. EXPORT RESTRICTIONS - You agree that You will not export or re-export the SOFTWARE PRODUCT to any country, person, or entity subject to Canadian export restrictions.

5. CHOICE OF LAW - This Software License Agreement is governed by the laws of the Province of Ontario, Canada.

6. ARBITRATION - All disputes arising in connection with this Agreement shall be determined by final and binding arbitration in accordance with the Arbitration Act, and the parties agree to be bound by the arbitrator's decision. The place of arbitration shall be Toronto, Canada, and the installation manual of the arbitration shall be English.

7. LIMITED WARRANTY

(a) NO WARRANTY - DSC PROVIDES THE SOFTWARE "AS IS" WITHOUT WARRANTY. DSC DOES NOT WARRANT THAT THE SOFTWARE WILL MEET YOUR REQUIREMENTS OR THAT OPERATION OF THE SOFTWARE WILL BE UNINTERRUPTED OR ERROR-FREE.

(b) CHANGES IN OPERATING ENVIRONMENT - DSC shall not be responsible for problems caused by changes in the operating characteristics of the HARDWARE, or for problems in the interaction of the SOFTWARE PRODUCT with non-DSC-SOFTWARE or HARDWARE PRODUCTS.

(c) LIMITATION OF LIABILITY; WARRANTY REFLECTS ALLOCATION OF RISK - IN ANY EVENT, IF ANY STATUTE IMPLIES WARRANTIES OR CONDITIONS NOT STATED IN THIS LICENSE AGREEMENT, DSC'S ENTIRE LIABILITY UNDER ANY PROVISION OF THIS LICENSE AGREEMENT SHALL BE LIMITED TO THE GREATER OF THE AMOUNT ACTUALLY PAID BY YOU TO LICENSE THE SOFTWARE PRODUCT AND FIVE CANADIAN DOLLARS (CAD$5.00). BECAUSE SOME JURISDICTIONS DO NOT ALLOW THE EXCLUSION OR LIMITATION OF LIABILITY FOR CONSEQUENTIAL OR INCIDENTAL DAMAGES, THE ABOVE LIMITATION MAY NOT APPLY TO YOU.

(d) DISCLAIMER OF WARRANTIES - THIS WARRANTY CONTAINS THE ENTIRE WARRANTY AND SHALL BE IN LIEU OF ANY AND ALL OTHER WARRANTIES, WHETHER EXPRESSED OR IMPLIED (INCLUDING ALL IMPLIED WARRANTIES OF MERCHANTABILITY OR FITNESS FOR A PARTICULAR PURPOSE) AND OF ALL OTHER OBLIGATIONS OR LIABILITIES ON THE PART OF DSC. DSC MAKES NO OTHER WARRANTIES. DSC NEITHER ASSUMES NOR AUTHORIZES ANY OTHER PERSON PURPORTING TO ACT ON ITS BEHALF TO MODIFY OR TO CHANGE THIS WARRANTY, NOR TO ASSUME FOR IT ANY OTHER WARRANTY OR LIABILITY CONCERNING THIS SOFTWARE PRODUCT.

(e) EXCLUSIVE REMEDY AND LIMITATION OF WARRANTY - UNDER NO CIRCUMSTANCES SHALL DSC BE LIABLE FOR ANY SPECIAL, INCIDENTAL, CONSEQUENTIAL OR INDIRECT DAMAGES BASED UPON BREACH OF WARRANTY, BREACH OF CONTRACT, NEGLIGENCE, STRICT LIABILITY, OR ANY OTHER LEGAL THEORY. SUCH DAMAGES INCLUDE, BUT ARE NOT LIMITED TO, LOSS OF PROFITS, LOSS OF THE SOFTWARE PRODUCT OR ANY ASSOCIATED EQUIPMENT, COST OF CAPITAL, COST OF SUBSTITUTE OR REPLACEMENT EQUIPMENT, FACILITIES OR SERVICES, DOWN TIME, PURCHASERS TIME, THE CLAIMS OF THIRD PARTIES, INCLUDING CUSTOMERS, AND INJURY TO PROPERTY.