WARNING

This manual contains information on limitations regarding product use and function and information on the limitations as to liability of the manufacturer. The entire manual should be carefully read.

Installation Manual

DSC®

Classic

PC585

Software Version 2.3 / DLS-1 v6.7 and up

See Back Cover for New Features in Version 2.3

WARNING Please Read Carefully

Note to Installers

This warning contains vital information. As the only individual in contact with system users, it is your responsibility to bring each item in this warning to the attention of the users of this system.

System Failures

This system has been carefully designed to be as effective as possible. There are circumstances, however, involving fire, burglary, or other types of emergencies where it may not provide protection. Any alarm system of any type may be compromised deliberately or may fail to operate as expected for a variety of reasons. Some but not all of these reasons may be:

■ Inadequate Installation

A security system must be installed properly in order to provide adequate protection. Every installation should be evaluated by a security professional to ensure that all access points and areas are covered. Locks and latches on windows and doors must be secure and operate as intended. Windows, doors, walls, ceilings and other building materials must be of sufficient strength and construction to provide the level of protection expected. A reevaluation must be done during and after any construction activity. An evaluation by the fire and/or police department is highly recommended if this service is available.

■ Criminal Knowledge

This system contains security features which were known to be effective at the time of manufacture. It is possible for persons with criminal intent to develop techniques which reduce the effectiveness of these features. It is important that a security system be reviewed periodically to ensure that its features remain effective and that it be updated or replaced if it is found that it does not provide the protection expected.

■ Access by Intruders

Intruders may enter through an unprotected access point, circumvent a sensing device, evade detection by moving through an area of insufficient coverage, disconnect a warning device, or interfere with or prevent the proper operation of the system.

■ Power Failure

Control units, intrusion detectors, smoke detectors and many other security devices require an adequate power supply for proper operation. If a device operates from batteries, it is possible for the batteries to fail. Even if the batteries have not failed, they must be charged, in good condition and installed correctly. If a device operates only by AC power, any interruption, however brief, will render that device inoperative while it does not have power. Power interruptions of any length are often accompanied by voltage fluctuations which may damage electronic equipment such as a security system. After a power interruption has occurred, immediately conduct a complete system test to ensure that the system operates as intended.

■ Failure of Replaceable Batteries

This system's wireless transmitters have been designed to provide several years of battery life under normal conditions. The expected battery life is a function of the device environment, usage and type. Ambient conditions such as high humidity, high or low temperatures, or large temperature fluctuations may reduce the expected battery life. While each transmitting device has a low battery monitor which identifies when the batteries need to be replaced, this monitor may fail to operate as expected. Regular testing and maintenance will keep the system in good operating condition.

■ Compromise of Radio Frequency (Wireless) Devices

Signals may not reach the receiver under all circumstances which could include metal objects placed on or near the radio path or deliberate jamming or other inadvertent radio signal interference.

■ System Users

A user may not be able to operate a panic or emergency switch possibly due to permanent or temporary physical disability, inability to reach the device in time, or unfamiliarity with the correct operation. It is important that all system users be trained in the correct operation of the alarm system and that they know how to respond when the system indicates an alarm.

■ Smoke Detectors

Smoke detectors that are a part of this system may not properly alert occupants of a fire for a number of reasons, some of which follow. The smoke detectors may have been improperly installed or positioned. Smoke may not be able to reach the smoke detectors, such as when the fire is in a chimney, walls or roofs, or on the other side of closed doors. Smoke detectors may not detect smoke from fires on another level of the residence or building.

Every fire is different in the amount of smoke produced and the rate of burning. Smoke detectors cannot sense all types of fires equally well. Smoke detectors may not provide timely warning of fires caused by carelessness or safety hazards such as smoking in bed, violent explosions, escaping gas, improper storage of flammable materials, overloaded electrical circuits, children playing with matches or arson.

Even if the smoke detector operates as intended, there may be circumstances when there is insufficient warning to allow all occupants to escape in time to avoid injury or death.

■ Motion Detectors

Motion detectors can only detect motion within the designated areas as shown in their respective installation instructions. They cannot discriminate between intruders and intended occupants. Motion detectors do not provide volumetric area protection. They have multiple beams of detection and motion can only be detected in unobstructed areas covered by these beams. They cannot detect motion which occurs behind walls, ceilings, floor, closed doors, glass partitions, glass doors or windows. Any type of tampering whether intentional or unintentional such as masking, painting, or spraying of any material on the lenses, mirrors, windows or any other part of the detection system will impair its proper operation.

Passive infrared motion detectors operate by sensing changes in temperature. However their effectiveness can be reduced when the ambient temperature rises near or above body temperature or if there are intentional or unintentional sources of heat in or near the detection area. Some of these heat sources could be heaters, radiators, stoves, barbeques, fireplaces, sunlight, steam vents, lighting and so on.

■ Warning Devices

Warning devices such as sirens, bells, horns, or strobes may not warn people or waken someone sleeping if there is an intervening wall or door. If warning devices are located on a different level of the residence or premise, then it is less likely that the occupants will be alerted or awakened. Audible warning devices may be interfered with by other noise sources such as stereos, radios, televisions, air conditioners or other appliances, or passing traffic. Audible warning devices, however loud, may not be heard by a hearing-impaired person.

■ Telephone Lines

If telephone lines are used to transmit alarms, they may be out of service or busy for certain periods of time. Also an intruder may cut the telephone line or defeat its operation by more sophisticated means which may be difficult to detect.

■ Insufficient Time

There may be circumstances when the system will operate as intended, yet the occupants will not be protected from the emergency due to their inability to respond to the warnings in a timely manner. If the system is monitored, the response may not occur in time to protect the occupants or their belongings.

■ Component Failure

Although every effort has been made to make this system as reliable as possible, the system may fail to function as intended due to the failure of a component.

■ Inadequate Testing

Most problems that would prevent an alarm system from operating as intended can be found by regular testing and maintenance. The complete system should be tested weekly and immediately after a break-in, an attempted break-in, a fire, a storm, an earthquake, an accident, or any kind of construction activity inside or outside the premises. The testing should include all sensing devices, keypads, consoles, alarm indicating devices and any other operational devices that are part of the system.

■ Security and Insurance

Regardless of its capabilities, an alarm system is not a substitute for property or life insurance. An alarm system also is not a substitute for property owners, renters, or other occupants to act prudently to prevent or minimize the harmful effects of an emergency situation.

Limited Warranty

Digital Security Controls Ltd. warrants the original purchaser that for a period of twelve months from the date of purchase, the product shall be free of defects in materials and workmanship under normal use. During the warranty period, Digital Security Controls Ltd. shall, at its option, repair or replace any defective product upon return of the product to its factory, at no charge for labour and materials. Any replacement and/or repaired parts are warranted for the remainder of the original warranty or ninety (90) days, whichever is longer. The original owner must promptly notify Digital Security Controls Ltd. in writing that there is defect in material or workmanship, such written notice to be received in all events prior to expiration of the warranty period.

International Warranty

The warranty for international customers is the same as for any customer within Canada and the United States, with the exception that Digital Security Controls Ltd. shall not be responsible for any customs fees, taxes, or VAT that may be due.

Warranty Procedure

To obtain service under this warranty, please return the item(s) in question to the point of purchase. All authorized distributors and dealers have a warranty program. Anyone returning goods to Digital Security Controls Ltd. must first obtain an authorization number. Digital Security Controls Ltd. will not accept any shipment whatsoever for which prior authorization has not been obtained.

Conditions to Void Warranty

This warranty applies only to defects in parts and workmanship relating to normal use. It does not cover:

- damage incurred in shipping or handling;
- damage caused by disaster such as fire, flood, wind, earthquake or lightning;
- damage due to causes beyond the control of Digital Security Controls Ltd. such as excessive voltage, mechanical shock or water damage;
- damage caused by unauthorized attachment, alterations, modifications or foreign objects;
- damage caused by peripherals (unless such peripherals were supplied by Digital Security Controls Ltd.);
- defects caused by failure to provide a suitable installation environment for the products;
- damage caused by use of the products for purposes other than those for which it was designed;
- damage from improper maintenance;
- damage arising out of any other abuse, mishandling or improper application of the products.

Digital Security Controls Ltd.'s liability for failure to repair the product under this warranty after a reasonable number of attempts will be limited to a replacement of the product, as the exclusive remedy for breach of warranty. Under no circumstances shall Digital Security Controls Ltd. be liable for any special, incidental, or consequential damages based upon breach of warranty, breach of contract, negligence, strict liability, or any other legal theory. Such damages include, but are not limited to, loss of profits, loss of the product or any associated equipment, cost of capital, cost of substitute or replacement equipment, facilities or services, down time, purchaser's time, the claims of third parties, including customers, and injury to property.

Disclaimer of Warranties

This warranty contains the entire warranty and shall be in lieu of any and all other warranties, whether expressed or implied (including all implied warranties of merchantability or fitness for a particular purpose) And of all other obligations or liabilities on the part of Digital Security Controls Ltd. Digital Security Controls Ltd. neither assumes nor authorizes any other person purporting to act on its behalf to modify or to change this warranty, nor to assume for it any other warranty or liability concerning this product.

This disclaimer of warranties and limited warranty are governed by the laws of the province of Ontario, Canada.

WARNING: Digital Security Controls Ltd. recommends that the entire system be completely tested on a regular basis. However, despite frequent testing, and due to, but not limited to, criminal tampering or electrical disruption, it is possible for this product to fail to perform as expected.

Installer's Lockout

Any products returned to DSC which have the Installer's Lockout option enabled and exhibit no other problems will be subject to a service charge.

Out of Warranty Repairs

Digital Security Controls Ltd. will at its option repair or replace out-of-warranty products which are returned to its factory according to the following conditions. Anyone returning goods to Digital Security Controls Ltd. must first obtain an authorization number. Digital Security Controls Ltd. will not accept any shipment whatsoever for which prior authorization has not been obtained.

Products which Digital Security Controls Ltd. determines to be repairable will be repaired and returned. A set fee which Digital Security Controls Ltd. has predetermined and which may be revised from time to time, will be charged for each unit repaired.

Products which Digital Security Controls Ltd. determines not to be repairable will be replaced by the nearest equivalent product available at that time. The current market price of the replacement product will be charged for each replacement unit.

Table of Contents

Section 1: System Introduction 1
1.1 Specifications 1
1.2 Additional Devices 2
1.3 Out of the Box 2

Section 2: Getting Started 3
2.1 Installation Steps 3
2.2 Terminal Descriptions 3
2.3 Keybus Operation and Wiring 4
2.4 Current Ratings – Modules and Accessories 4
2.5 Keypad Assignment 4
2.6 Supervision 5
2.7 Removing Modules 5
2.8 Zone Wiring 5
2.9 Fire Zone Wiring 6
2.10 LINKS Zone Wiring 6
2.11 Keypad Zones 6

Section 3: Keypad Commands 8
3.1 Arming and Disarming 8
3.2 Auto Bypass – Stay Arming 8
3.3 Automatic Arming 8
3.4 [*] Commands 8
3.5 Function Keys 11
3.6 Features Available for the LCD5500Z 12

Section 4: How to Program 13
4.1 Installer's Programming 13
4.2 Programming Decimal Data 13
4.3 Programming HEX Data 13
4.4 Programming Toggle Option Sections 14
4.5 Viewing Programming 14

Section 5: Program Descriptions 15
5.1 Programming Security Codes 15
5.2 Zone Programming 15
5.3 Zone Attributes 16
5.4 Assigning Keypad Zones 17
5.5 Communicator – Dialing 17
5.6 Communicator – Account Numbers 17
5.7 Communicator – Telephone Numbers 17
5.8 Communicator – Reporting Codes 18
5.9 Communicator – Reporting Formats 19
5.10 Downloading 20
5.11 PGM Output Options 21
5.12 Telephone Line Monitor (TLM) 23
5.13 Bell 23
5.14 Test Transmission 23
5.15 Transmission Delay 23
5.16 Fire, Auxiliary and Panic Keys 23
5.17 Arming/Disarming Options 24
5.18 Entry/Exit Delay Options 24
5.19 Swinger Shutdown 25
5.20 Event Buffer 25
5.21 Keypad Lockout Options 25
5.22 Keypad Blanking 25
5.23 Keypad Backlighting 25
5.24 Loop Response 25
5.25 Keypad Tampers 26
5.26 LINKS1000 Cellular Communicator 26
5.27 Additional System Modules 26
5.28 Clock Adjust 26
5.29 Timebase 27
5.30 Resetting Factory Defaults 27
5.31 Installer's Lockout 27
5.32 Walk Test (Installer) 27

Section 6: Programming Worksheets 28

Appendix A: Reporting Codes 43

Appendix B: Programming LCD Keypads 45

PC585 Wiring Diagram

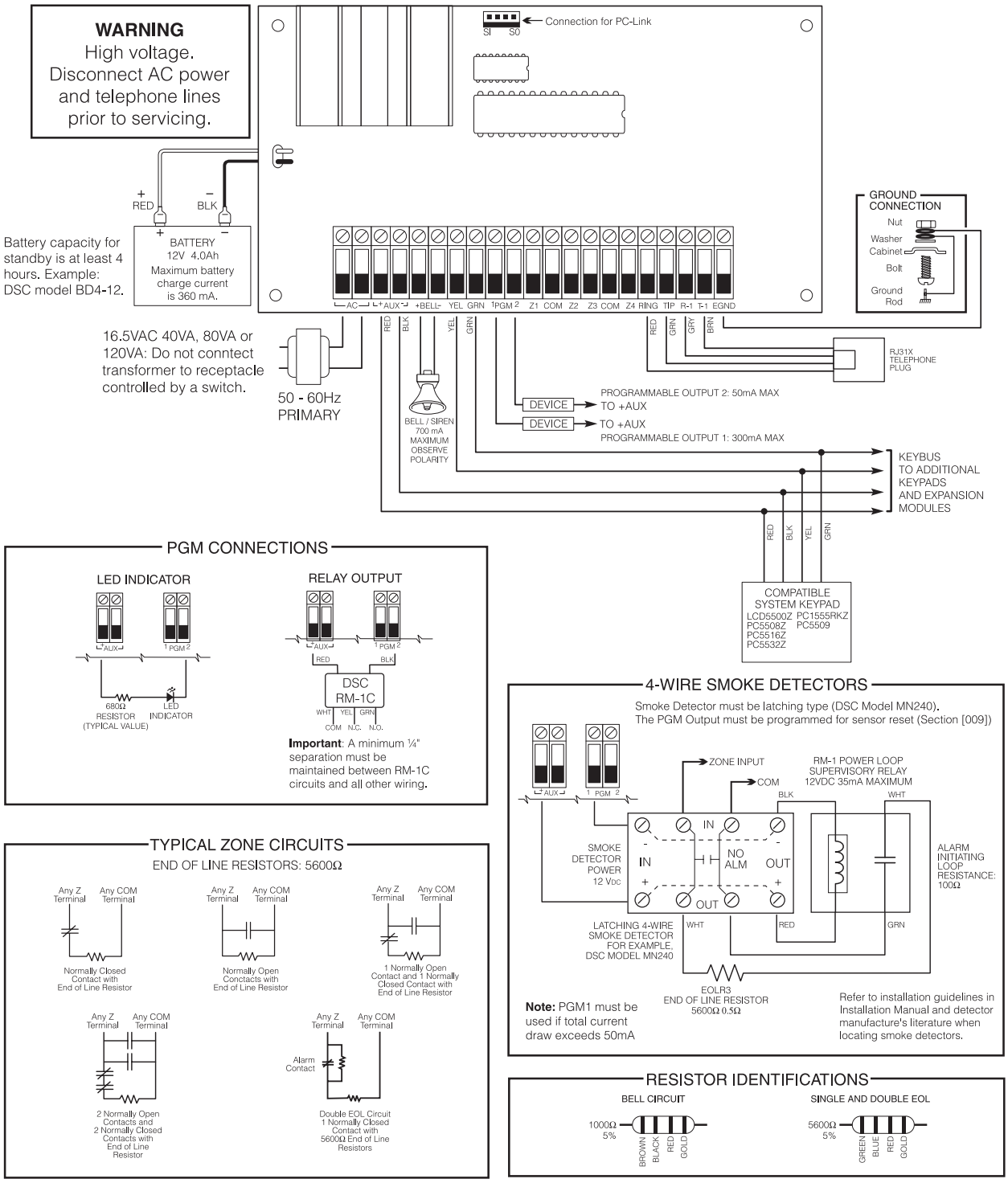

This device complies with Parts 15 and 68 of the FCC rules. Operation is subject to the following two conditions: (1) this device may not cause harmful interference, and (2) this device must accept any interference received, including interference that may cause undesired operation.

FCC Reg. No.: F53CAN-32394-AL-E REN = 0.0B Plug Type: RJ31X

INDUSTRY CANADA: REN = 0.1

MADE IN CANADA

WARNING: Not to be removed by anyone except occupant.

Section 1: System Introduction

1.1 Specifications

Downloading Software Support
- PC585 v2.3 uses DLS-1 v6.7 and up.

Flexible Zone Configuration
- Four fully programmable zones
- System expandable to 32 zones using:
  - up to 8 keypad zone inputs and/or
  - up to 32 wireless zones with the PC5132 wireless expansion module
- 38 access codes: one master code, one maintenance code, two duress codes, two supervision codes and 32 general access codes
- 27 zone types; 8 programmable zone attributes
- Normally closed, single EOL and double EOL zone wiring

Audible Alarm Output
- 700mA Supervised Bell Output (current limited at 3 amps), 12VDC
- Steady or Pulsed Output

EEPROM Memory
- Does not lose programming or system status on complete AC and Battery failure

Programmable Outputs
- Two programmable outputs; 18 programmable options
- PGM1 = 300mA; PGM2 = 50mA

Powerful 1.5 Amp Regulated Power Supply
- 550 mA Auxiliary Supply, 12 VDC
- Positive Temperature Coefficient (PTC) components replace fuses
- Supervision for loss of AC power, low battery
- Internal clock locked to AC power frequency

Power Requirements
- Transformer = 16.5 VAC, 40VA
- Battery = 12 volt 4 Ah minimum rechargeable sealed lead acid battery

Remote Keypad Specifications
- Keypads available:
  - PC5509 eight zone LED keypad
  - PC1555RKZ eight zone LED keypad with zone input
  - PC5508Z eight zone LED keypad with zone input
  - PC5516Z sixteen zone LED keypad with zone input
  - PC5532Z thirty-two zone LED keypad with zone input
  - LCD5500Z Alphanumeric keypad with zone input
- All keypads (except PC5509) have five programmable function keys
- Connect up to eight keypads
- 4-wire (Quad) connection to Keybus
- Built in piezoelectric buzzer

Digital Communicator Specifications
- Supports major communication formats including SIA and Contact ID
- Event-initiated personal paging
- Three programmable telephone numbers
- Two account numbers
- Supports LINKS1000 cellular communication
- Supports LINKS2X50 long range radio transmitter
- DTMF and pulse dialing
- DPDT line seizure
- Anti-jam feature
- Split reporting of selected transmissions to each telephone number

System Supervision Features

The PC585 continuously monitors a number of possible trouble conditions including:
- AC power failure
- Fault by zone
- Tamper by zone
- Fire trouble
- Failure to communicate
- AUX Power Supply Trouble
- Loss of internal clock
- Bell output trouble
- Telephone line trouble
- Low battery condition (panel)
- Low battery by zone (wireless)
- Module fault (supervisory or tamper)

False Alarm Prevention Features
- Audible Exit Delay
- Audible Exit Fault
- Communication Delay
- Urgency on Entry Delay
- Quick Exit
- Cross Zone Burglary Alarm
- Rotating Keypress Buffer
- One Restart of Exit Delay

Additional Features
- Auto Arm at specified time
- Keypad-activated alarm output and communicator test
- All modules connect to the system via a four wire Keybus up to 1000'/305m from main panel
- An event buffer which records the past 128 events with both the time and date at which they occurred; buffer can be printed using PC5400 serial interface module, or viewed with the LCD5500Z keypad and DLS-1 software
- Supports the addition of the PC5132 wireless receiver for integration of wireless devices
- Uploading and downloading capability
- Local downloading capability through the use of the PC-LINK adaptor
- Added Keybus fault protection: clock and data outputs have been programmed to withstand shorts to +12v to prevent control panel damage

1.2 Additional Devices

In addition to the information below, see the back cover for a DSC module compatibility table.

PC5132 Wireless Receiver

The PC5132 Wireless Receiver can be used to connect up to 32 wireless devices to the system. All devices are spread spectrum, 900 MHz, fully supervised devices which use standard 'AAA' or 'AA' alkaline batteries.

Seven devices are available. They are as follows:

WLS904 Wireless Motion Detector: Adds wireless space protection to your system

WLS905 Wireless Universal Transmitter: Adds wireless door or window contacts to your system.

WLS906 Wireless Smoke Detector: Adds smoke detection to your system.

WLS907 Wireless Slimline Universal Transmitter: A smaller wireless door or window contact.

WLS908 Wireless Panic Pendant: Adds personal protection to the system. When used, the unit will indicate a non-medical emergency to the central station.

WLS909 Wireless Key : Adds a simple and mobile method of arming and disarming to the system, as well as one-button access to several programmable functions.

WLS910 Wireless Handheld Keypad: A portable keypad which allows arming and disarming from anywhere on the premises.

PC5400 Printer Module

The PC5400 Printer Module allows the panel to print out all events that occur on the system to any serial printer. The printout will contain the time, date and the event that occurred.

LINKS1000 Cellular Communicator

The LINKS1000 Cellular Communicator can be used three different ways: as the sole communicator for the panel, as a backup for either or both telephone numbers or as a redundant backup to the land line communicator where the panel will call both the land line and via the LINKS.

LINKS2X50

Either the LINKS2150 or LINKS2450 may be used to transmit alarm information over a long range radio network.

Cabinets

Several different cabinets are available for the PC585 modules. They are as follows:

PC5003C Cabinet

Main control cabinet for the PC585 main panel. Dimensions 288mm x 298mm x 78mm / 11.3" x 11.7" x 3" approximately.

PC500 Cabinet

Main control cabinet for the PC585 main panel. Dimensions 213mm x 235mm x 78mm / 8.4" x 9.25" x 3" approximately.

PC5004C Cabinet

Cabinet to house the PC5400 Printer Module. Dimensions 229mm x 178mm x 65mm / 9" x 7" x 2.6" approximately.

1.3 Out of the Box

Please verify that the following components are included in your system:

- one PC5003C main control cabinet
- one PC585 main control circuit board
- one PC1555RKZ keypad with zone input
- one Installation Manual with programming worksheets
- one Instruction Manual for the end user
- one hardware pack consisting of:
  - one mylar cabinet label
  - four plastic circuit board standoffs
  - ten 5600Ω (5.6K) resistors
  - one 2200Ω (2.2K) resistor
  - one 1000Ω (1K) resistor
  - ground connection assembly
  - one cabinet door plug

Section 2: Getting Started

The following sections provide a thorough description of how to wire and configure devices and zones.

2.1 Installation Steps

Read this section completely before you begin. Once you have an overall understanding of the installation process, carefully work through each step.

Step 1: Create a Layout

Draw a rough sketch of the building to get an idea of where all alarm detection devices, keypads and other modules are to be located.

Step 2: Mounting the Panel

Mount the panel in a dry area close to an unswitched AC power source and the incoming telephone line. Before attaching the cabinet to the wall, be sure to press the four circuit board mounting studs into the cabinet from the back. After you have attached the cabinet to the wall, stick the provided DSC logo sticker on the front of the cabinet.

NOTE: *You must complete all wiring before connecting the battery, or applying AC to the panel.*

Step 3: Wiring the Keybus (Section 2.3)

Wire the Keybus to each of the modules following the guidelines provided in Section 2.3 of this manual.

Step 4: Zone Wiring (Section 2.8)

You must power down the control panel to complete all zone wiring. Please refer to 2.8 *"Zone Wiring"* on page 5 when connecting zones using normally closed loops, single EOL resistors, double EOL resistors, Fire zones and Keyswitch Arming zones.

Step 5: Complete Wiring (Section 2.2)

Complete all other wiring including bells or sirens, telephone line connections, and ground connections following the guidelines provided in Section 2.2 ("Terminal Descriptions").

Step 6: Power up the Control

Once all zone and Keybus wiring is complete, power up the control panel. First, connect the red battery lead to the positive terminal and the black lead to negative. Then, connect the AC.

NOTE: *Connect the battery before connecting the AC. You must apply AC power to the panel for at least 10 seconds, or the panel will not function. The panel will not power up on the battery connection alone.*

Step 7: Keypad Assignment (Section 2.5)

In order for keypads to be properly supervised, each must be assigned to a different slot. Please follow the guidelines provided in Section 2.5 when assigning keypads.

Step 8: Supervision (Section 2.6)

The supervision of each module by the panel is automatically enabled upon power up. Please verify that all modules appear on the system according to the instructions in Section 2.6.

Step 9: Programming the System (Sections 4 & 5)

Section 4 explains how to program the panel. Section 5 contains a complete description of the various programmable features, which options are available and how they function. Fill out the Programming Worksheets completely before attempting to program the system.

Step 10: Testing the System

Test the panel thoroughly to ensure that all features and functions are operating as programmed.

2.2 Terminal Descriptions

Battery Connection

A 12V 4Ah rechargeable battery is used as a backup source of power in the event of an AC power failure. The battery also provides additional current when the panel's demands exceed the power output of the transformer, such as when the panel is in alarm.

The **High Current Charge/Standard Battery Charge** option (section [701], option [7]) allows you to choose between a high current battery charge and the standard battery charge rate.

High Current/Standard Battery Charge . . . .Section [701]: [7]

NOTE: *Do not connect the battery until all other wiring is complete. Connect the battery before connecting the AC.*

Connect the RED battery lead to the positive battery terminal; connect the BLACK lead to negative.

AC Terminals – AC

The panel requires a 16.5VAC, 40VA transformer. Connect the transformer to an unswitched AC source and connect the transformer to these terminals.

The panel can be programmed to accept a power line frequency of either 50Hz AC or 60Hz AC in programming section [701], option [1].

NOTE: *Do not connect the transformer until all other wiring is complete.*

Auxiliary Power Terminals – AUX+ and AUX-

These terminals provide up to 550 mA of additional current at 12 VDC for devices requiring power. Connect the positive side of any device requiring power to the AUX+ terminal, the negative side to AUX- (ground). The AUX output is protected. This means that if too much current is drawn from these terminals (such as a wiring short), the panel will temporarily shut off the output until the problem is corrected.

Bell Output Terminals – BELL+ and BELL-

These terminals provide up to 700 mA of continuous current at 12 VDC for powering bells, sirens, strobes or other warning-type equipment. Connect the positive side of any alarm warning device to BELL+, the negative side to BELL–. Please note that the Bell output is protected: if too much current is drawn from these terminals (such as a wiring short), the Bell PTC will open. Three amps can be drawn for short periods only.

The Bell output is supervised. If no alarm warning devices are in use, connect a 1000Ω resistor across BELL+ and BELL– to prevent the panel from displaying a trouble condition. For more information, please refer to *"[*][2] Trouble Display"* on page 9).

Keybus Terminals – AUX+, AUX-, YEL, GRN

The Keybus is used by the panel to communicate with modules and vice versa. Each module has four Keybus terminals that must be connected to the four Keybus terminals on the panel. For more information, see section 2.3 *"Keybus Operation and Wiring"* on page 4.

Programmable Output Terminals – PGM1 and PGM2
Each PGM output is designed so that when activated by the panel, the terminal will switch to ground

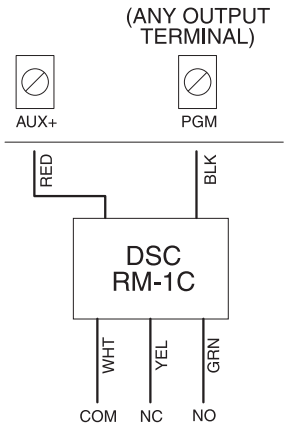

PGM1 can sink up to 300mA of current. Connect the positive side of the LED or buzzer to AUX+, the negative side to PGM1. If more than 300 mA of current are required, a relay must be used. PGM2 operates similarly to PGM1. However, PGM2 can only sink up to 50mA of current.

Please study PGM wiring in the accompanying diagram.

For a list of the programmable output options, please see section 5.11 *"PGM Output Options"* on page 21.

Zone Input Terminals – Z1 to Z4
Each detection device must be connected to a zone on the control panel. We suggest that one detection device be connected to each zone; wiring multiple detection devices to a single zone, however, is possible. For zone wiring specifics, please see section 2.8 *"Zone Wiring"* on page 5.

Telephone Connection Terminals – TIP, RING, T-1, R-1
If a telephone line is required for central station communication or downloading, connect an RJ-31X telephone jack in the following manner:

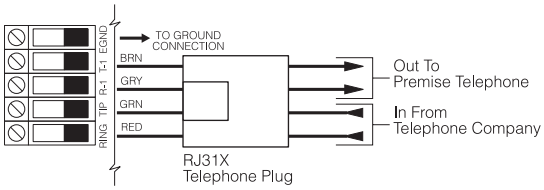

NOTE:*Please ensure that all plugs and jacks meet the dimension, tolerance and metallic plating requirements of 47 C.F.R. Part 68, SubPart F. For proper operation, no other telephone equipment should be connected between the control panel and the telephone company facilities. Do not connect the alarm panel communicator to telephone lines intended for use with a fax machine. These lines may incorporate a voice filter which disconnects the line if anything other than fax signals are detected, resulting in incomplete transmissions.*

2.3 Keybus Operation and Wiring

The Keybus is used by the panel to communicate with all connected modules and vice versa. The red (AUX+) and black (AUX-) terminals are used to provide power, while the yellow (YEL) and green (GRN) terminals are clock and data respectively.

NOTE: *The four Keybus terminals of the panel must be connected to the four Keybus terminals or wires of all modules.*

The following restrictions apply to Keybus wiring:

- Keybus should be run in minimum 22 gauge quad (0.5mm); two pair twist is preferred.
- The modules should be home-run to the panel but can be connected in series or T-tapped.
- Any module can be connected anywhere along the Keybus. You do not need to run a separate Keybus wire for keypads, etc.
- No module can be more than 1,000'/305m (in wire length) from the panel.
- Shielded wire should not be used.

Example of Keybus Wiring

NOTE:

Module (A) is correctly wired within 1,000'/305m of wire from the panel.

Module (B) is correctly wired within 1,000'/305m of wire from the panel.

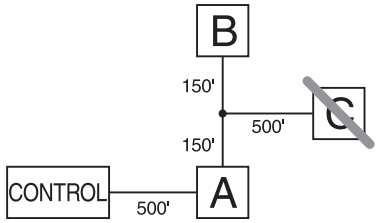

Module (C) is NOT wired correctly as it is further than 1,000'/305m from the panel, in wire distance.

2.4 Current Ratings – Modules and Accessories

In order for the PC585 system to operate properly, the power output capabilities of the main control and the expansion devices must not be exceeded. Use the data presented below to ensure that no part of the system is overloaded and cannot function properly.

PC585 (12 VDC)

AUX+: .....550mA: Subtract the listed rating for each keypad, expansion module and accessory connected to AUX+ or Keybus.

BELL: .....700mA continuous rating; 3.0A short term. Available only with standby battery connected.

PC585 Device Ratings (at 12 VDC)

- LCD5500Z Keypad: 85mA max.
- PC1555RKZ Keypad: 85mA max.
- PC5508Z, PC5516Z, PC5532Z Keypads: 85mA max.
- PC5509 Keypad: 85mA max.
- PC5400 Serial Module: 65mA
- PC5132 Wireless Receiver: 125mA

Other Devices

Please read the manufacturer's literature carefully to determine the maximum current requirements for each device—during activation or alarm—and include the proper values for loading calculations. Connected devices must not exceed system capabilities during any possible operational mode.

2.5 Keypad Assignment

There are eight available slots for keypads. LED keypads by default are always assigned to slot 1. LCD5500Z keypads are always assigned to slot 8. You will need to assign each keypad to its own slot (1 to 8). Keypad assignment is required, as it tells the panel which slots are occupied. The panel can then generate a fault when a keypad supervisory is not present.

NOTE: *One LCD keypad must be assigned to slot 8 in order to upload keypad programming using DLS-1 software.*

NOTE: *PC5509 keypads are always assigned to slot 1. They cannot be reprogrammed.*

How to Assign Keypads

Do the following at each keypad installed on the system:

1. Enter [*][8][installer's code] to go to installer programming
2. Enter [000] for Keypad Programming

3. Enter [0] for Slot Assignment
4. Enter a two digit number (11-18) to specify which supervisory slot the keypad will occupy.
5. Press [#] twice to exit installer programming.

After assigning all keypads, perform a supervisory reset by entering section [902] in installer's programming. The panel will now supervise all assigned keypads and enrolled modules on the system.

How to Program Function Keys

By default, the 5 function keys on each keypad are programmed as Stay Arm (03), Away Arm (04), Chime (06), Sensor Reset (14) and Quick Exit (16). You can change the function of each key on every keypad:

1. Go to the keypad where you want to change the function key programming and enter Installer Programming.
2. Press [000] for Keypad Programming.
3. Enter [1] to [5] to select a function key to program.
4. Enter the 2 digit number, [00] to [17] to select the feature you want the function key to have. For a complete list of Function Key options see section 3.5 *"Function Keys"* on page 11.
5. Continue from step 3 until all function keys are programmed.
6. To exit Installer Programming, press [#] twice.

2.6 Supervision

By default, all modules are supervised upon installation. Supervision is enabled at all times so that the panel can indicate a trouble if a module is removed from the system.

To check which modules are currently connected and supervised, enter programming section [903] from installer's programming. The LCD keypad will allow you to scroll through the display of connected modules. A connected module which does not show as being present will appear as a trouble condition and the Trouble light on the keypad will turn ON. This condition may be due to one or more of the following reasons:

- the module is not connected to the Keybus
- there is a Keybus wiring problem
- the module is more than 1,000'/305m from the panel
- the module does not have enough power

For more information regarding module supervision troubles, please refer to *"[*][2] Trouble Display"* on page 9.

2.7 Removing Modules

The panel must be instructed to no longer supervise a module being removed from the system. To remove the module, disconnect it from the Keybus and reset the supervision field by entering [902] in the installer's programming. The panel will be reset to recognize and supervise all existing modules on the system.

2.8 Zone Wiring

For a complete description of the operation of all zone types, please refer to 5.2 *"Zone Programming"* on page 15.

There are several different ways in which zones may be wired, depending on which programming options have been selected. The panel can be programmed to supervise normally closed, End of Line, or Double End of Line loops. Please refer to the following diagrams to study each type of individually supervised zone wiring.

NOTE:*Any zone programmed for Fire or 24 Hour Supervisory must be wired with a single End of Line (EOL) resistor regardless of the type of zone wiring supervision selected for the panel (section [013]: [1] -[2]). See 5.2 "Zone Programming" on page 15.*

NOTE:*If you change the zone supervision options from DEOL to EOL or from NC to DEOL (section [013], options [1] or [2]), you should power down the system completely, and then power it back up. If you do not, the zones may not work correctly.*

Normally Closed (NC) Loops

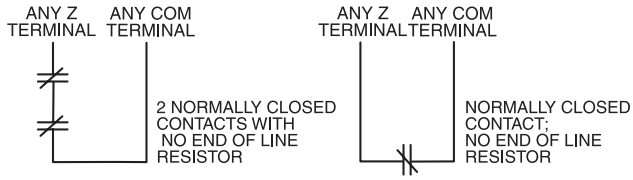

To enable normally closed loops, programming section [013], option [1] must be ON.

NOTE:*This option should only be selected if Normally Closed (NC) detection devices or contacts are being used.*

Single End Of Line (EOL) Resistors (5600Ω)

To enable panel detection of single end of line resistors, programming section [013], options [1] and [2] must be OFF.

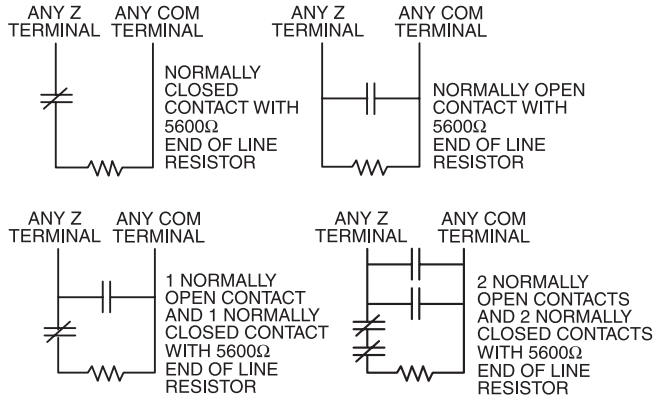

NOTE:*This option should be selected if either Normally Closed (NC) or Normally Open (NO) detection devices or contacts are being used.*

Double End of Line (DEOL) Resistors

Double End of Line resistors allow the panel to determine if the zone is in alarm, tampered or faulted.

To enable panel detection of double end of line resistors, programming section [013], option [1] must be OFF and option [2] must be ON.

NOTE: *If the Double EOL supervision option is enabled, all hardwire zones on the main panel must be wired for Double EOL resistors, except for Fire and 24 Hour Supervisory zones.*

NOTE:*Do not wire DEOL resistors on keypad zones.*

NOTE: *Do not use DEOL resistors for Fire zones or 24 Hour Supervisory zones. Do not wire Fire zones to keypad zone terminals if the DEOL supervision option is selected.*

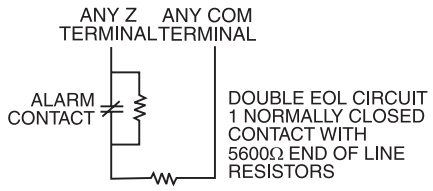

NOTE: *This option can only be selected if Normally Closed (NC) detection devices or contacts are being used.*

NOTE:*Only one NC contact can be connected to each zone. Wiring multiple detection devices or contacts on a single loop is not allowed.*

The following chart shows zone status under certain conditions:

Loop Resistance	Loop Status
0Ω (shorted wire, loop shorted)	Fault
5600Ω (contact closed)	Secure
Infinite (broken wire, loop open)	Tamper
11200Ω (contact open)	Violated

End of Line Resistors. . . . . .Section [013]: [1]
Double End of Line Resistors . . . . . .Section [013]: [2]

2.9 Fire Zone Wiring

NOTE:*4-Wire Smoke Detectors*

All fire zones must be wired according to the following diagram:

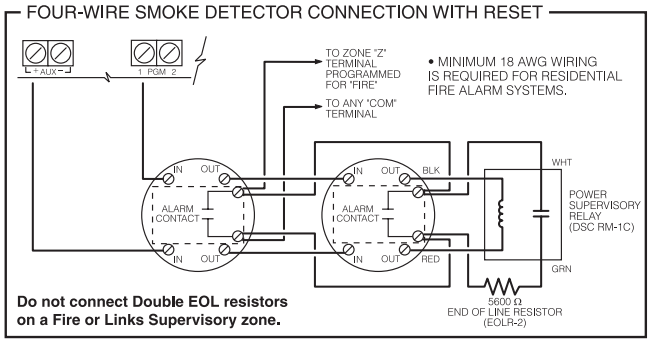

2.10 LINKS Zone Wiring

LINKS Support

When using the LINKS1000 cellular communicator, connect the LINKS to the main panel according to the following diagram:

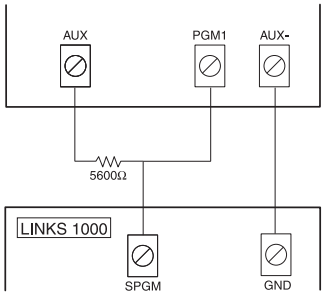

LINKS Supervision (24 Hour Supervisory)

When using the LINKS1000 cellular communicator, any main board zone may be configured for LINKS Supervision. Program this zone as zone type [09], 24 Hour Supervisory in section [001].

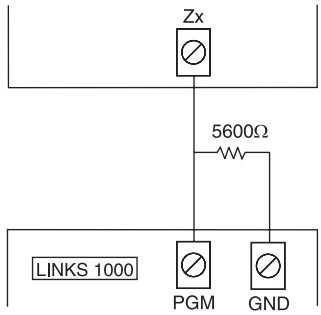

With a LINKS Supervisory zone, if the LINKS1000 experiences a trouble, the zone will be violated, causing the panel to report the event to the central station. This type of zone always requires a single EOL resistor (5600Ω).

Wire this zone according to the above diagram.

LINKS Answer

When using the LINKS1000 cellular communicator, any main board zone may be configured for LINKS Answer.

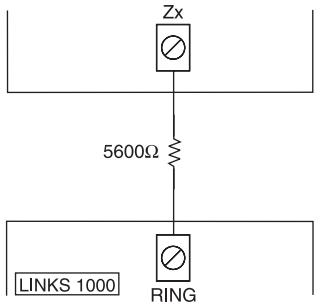

A zone configured for LINKS Answer allows downloading to be performed in the event of telephone line failure. When the LINKS receives a telephone call, it will activate the RING terminal on the LINKS circuit board. The zone programmed as LINKS Answer always requires a single EOL resistor (5600Ω).

Wire the LINKS Answer zone according to the above diagram.

NOTE: *The LINKS Answer zone is only required for downloading to the panel via the LINKS.*

NOTE: *When using the LINKS, Busy Tone Detection must not be used.*

NOTE: *Keypad zones cannot be used for 24 Hour Supervisory or LINKS Answer.*

2.11 Keypad Zones

Each “z” keypad on the system has a zone input to which a device - such as a door contact - can be connected. This eliminates the need to run wires back to the control panel for every device.

To install the keypad, open the keypad plastic by removing the screw at the bottom of the unit. Locate the five terminals on the keypad circuit board. Connect the four Keybus wires from the control panel: the red wire to R, the black to B, the yellow to Y and the green to G.

To connect the zone, run one wire to the Z terminal and the other to B. For powered devices, use red and black to supply power to the device. Run the red wire to the R (positive) terminal and the black wire to the B (negative) terminal.

When using end of line supervision, connect the zone according to one of the configurations outlined in section *2.8 “Zone*

Wiring". End of line resistors must be placed on the device end of the loop, not at the keypad.

***NOTE:** Keypad zones do not support DEOL resistors.*

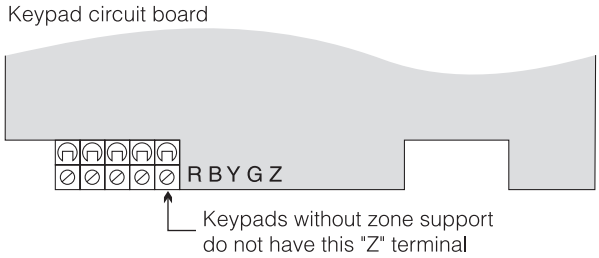

Assigning Keypad Zones

When using keypad zone inputs, each input used must be assigned a zone number in Installer's Programming.

First, ensure that you have enrolled all installed keypads into the desired slots. (See 2.5 *"Keypad Assignment"* on page 4.)

Next, enter programming section [020] to assign the zones. There are eight programming locations in this section, one for each keypad slot. Enter a 2-digit zone number for each of the keypad zones. This number must be entered in the location corresponding to the keypad to which each zone is connected.

Example: The zone on an LCD5500Z keypad in slot 8 is to be assigned zone 3. In section [020], scroll to option [8] and enter (03).

***NOTE:**Keypad zones 1-4 will replace zone terminals Z1-Z4 on the control panel.*

***NOTE:** Once the keypad zones are assigned, you must also program zone definitions and zone attributes. (See also 5.4 "Assigning Keypad Zones" on page 17).*

Section 3: Keypad Commands

Use any system keypad to enter commands and/or program the PC585 security system. The LED keypad uses function and zone indicator lights to represent alarm functions and status. If you have a PC1555RKZ keypad, the System light acts as a Trouble, Memory, Program and Bypass indicator. Unlike other LED keypads, these conditions will only be represented by the System light.

The LCD keypad provides a written description on the liquid crystal display and uses function indicator lights to communicate alarm status to the user.

The PC585 Instruction Manual provides basic directions for arming and disarming the system, bypassing zones and performing user functions from the keypads. The following sections provide additional details on these functions.

3.1 Arming and Disarming

For a description of basic arming and disarming, please see the PC585 Instruction Manual. For other methods of arming, please refer to *"[*][0] Quick Arm"*, *"[*][9] Arming Without Entry Delay"* and 3.5 *"Function Keys"* on page 11.

***NOTE:** The event buffer will log "Armed in Stay Mode" or "Armed in Away Mode" whenever the system is armed.*

In an attempt to prevent false alarms, the **Audible Exit Fault** will notify the user of an improper exit when they arm their system. If a non force-arming Delay 1 or Delay 2 type zone is left open at the end of the exit delay, the entry delay will begin immediately and the bell or siren will sound a steady alarm for the entry delay period. At the end of the entry delay period, if the system has not been disarmed it will go into alarm. This feature can be turned OFF in programming section [013], option [6]. (See 5.17 *"Arming/Disarming Options"* on page 24.)

3.2 Auto Bypass – Stay Arming

Stay arming allows the user to arm the system without leaving the premises. All zones programmed as stay/away will be bypassed when the user stay arms the system, so that the user does not have to bypass interior zones manually. (See 5.2 *"Zone Programming"* on page 15.)

When the system is armed using a valid access code, if any zones on the system have been programmed as stay/away zones, the Bypass light will turn ON. The panel will then monitor all zones programmed as Delay 1 and Delay 2 zones, such as designated entry/exit doors. If a delay zone is not violated by the end of the exit delay, the panel will bypass all stay/away zones. The Bypass light will remain on to inform the user that the interior zones have been automatically bypassed by the panel. If a delay zone is violated during the exit delay, the system will arm in Away mode and all stay/away zones will be active after the exit delay expires.

The user can arm the stay/away zones at any time by entering the [*][1] keypad command. (See *"[*][1] Bypassing and Activating Stay/Away Zones"* on page 8.)

Stay arming can also be initiated by pressing and holding the Stay function key for two seconds on the PC5508Z and LCD5500Z keypads, if programmed by the installer. For more information regarding Stay arming, please see 3.5 *"Function Keys"* on page 11.

3.3 Automatic Arming

The system can be programmed to Auto-Arm at a specific time every day if it is in the disarmed condition. In order for the Auto-Arm function to work properly, you must program the correct Time of Day. For programming the clock and auto-arm times, see *"[*][6] User Functions"* on page 10.

When the system's internal clock matches the Auto-Arm Time, the panel will check the system status. If the system is armed, the panel will do nothing until the next day at the auto-arm time, when it will check the system again. If the system is disarmed at the auto-arm time, the panel will sound the buzzer of all keypads for one minute. If the **Bell Squawk During Auto Arm** option is enabled (section [014], option [2]), the bell will squawk once every 10 seconds while the system is auto-arming. If a valid access code is entered, auto-arming will be aborted.

***NOTE:** If auto-arm is cancelled, the number of the user who cancelled the auto-arm will be logged in the event buffer.*

If no code is entered, the panel will auto-arm. If a zone is violated, the panel will transmit a Partial Closing Reporting Code – if programmed – to indicate to the central station that the system is not secure. If the zone is restored, the panel will add the zone back into the system.

***NOTE:** Auto arming can only be cancelled by entering a valid access code at any keypad.*

3.4 [*] Commands

The [*] key commands provide an easy way for the user to access basic system programming – such as programming access codes or bypassing zones. The user can also use the [*] key commands to check on the system's status, including viewing trouble conditions and displaying the event buffer on the LCD keypad.

The [*] key commands can be performed from both LCD and LED keypads. The LED keypad uses the zone indicator lights to display command information. The LCD display provides written information, guiding the user through each command. The commands in this section are explained as viewed from an LED keypad. When using an LCD keypad, use the arrow keys (< >) to scroll through information provided. Otherwise, the functions remain the same for both keypad types.

[*][1] Bypassing and Activating Stay/Away Zones

Use the [*][1] keypad command to bypass individual zones. A bypassed zone will not cause an alarm.

***NOTE:** Zones can only be bypassed when the system is not armed.*

If the **Code Required for Bypass** option is enabled (section [015], option [5]), only access codes with the bypass attribute enabled will be able to bypass zones. (See 5.1 *"Programming Security Codes"* on page 15.)

If the **Bypass Status Displayed While Armed** option is chosen, the Bypass (or System) light will be ON while the system is armed to indicate any bypassed zones. (See 5.17 *"Arming/Disarming Options"* on page 24.)

***NOTE:** When you disarm the system, all manually-bypassed zones will be unbypassed.*

Activate Stay/Away Zones

If the system is armed in stay mode, the [*][1] command can be used to activate the stay/away zones.

[*][2] Trouble Display

The panel constantly monitors itself for several different trouble conditions. If a trouble condition is present, the Trouble (or System) light will be on and the keypad will beep twice every 10 seconds. The trouble beep can be silenced by pressing any key on any keypad. If **Bell Squawk on Trouble** is enabled (section [014], option [5]), the bell will squawk every 10 seconds when a trouble condition is present.

To view trouble conditions from an LED keypad:

1. Press [*][2].
2. The keypad will flash the Trouble (or System) light. The zone indicator lights corresponding to the present trouble conditions will be ON.

When using an LCD keypad, the trouble conditions will be listed on the display. Use the arrow (< >) keys to scroll through the list of present trouble conditions.

NOTE:*Troubles can be viewed while armed using the LCD keypad, provided the keypad is version 2.0 or later. Older keypads will incorrectly display "Fire Trouble". If using older LCD keypads, programming section [013], option [3] as OFF will ensure troubles are displayed correctly.*

The various troubles are described below:

Light	Trouble
1	**Service Required:** Press [1] to determine the specific trouble. Lights 1 - 5 will light up to indicate the trouble: • Light [1] Low Battery: Main panel backup battery charge is low (below 11.5 volts under load).Trouble is restored when the battery charges over 12.5 volts. • Light [2] Bell Circuit Trouble: The bell circuit is open (see section 5.13 *"Bell"* on page 23). • Light [3] General System Trouble: The printer connected to the PC5400 Printer module has a fault and is off-line. • Light [4] General System Tamper: Tamper has been detected in a module. • Light [5] General System Supervisory: The panel has lost communication with a module connected to the Keybus (see section 2.6 *"Supervision"* on page 5). The event buffer will log the event. ***NOTE:*** *All tamper conditions must be physically restored before the trouble condition will clear.* ***NOTE:***Lights [6-8] – Not used
2	**AC Failure:** AC power is no longer being supplied to the control panel. The Trouble (or System) light will flash if an AC Failure is present, if the Trouble Light Flashes if AC Fails option is programmed (section [016], option [2]). This trouble will not be displayed if the AC Trouble Displayed option is disabled (section [016], option [1]). See section 5.8 *"Communicator – Reporting Codes"* on page 18 for information on AC trouble reporting.
3	**Telephone Line Monitoring Trouble (TLM):** There is a problem with the telephone line (See section 5.12 *"Telephone Line Monitor (TLM)"* on page 23.)
4	**Failure to Communicate (FTC):** The communicator failed to communicate with any of the programmed telephone numbers (see section 5.5 *"Communicator – Dialing"* on page 17).
5	**Zone Fault (including Fire Zone):** A zone on the system is experiencing trouble, meaning that a zone could not provide an alarm to the panel if required to do so (e.g. a fire zone is open, or there is a short on a DEOL zone, or a supervisory fault on a wireless zone). When a zone fault trouble condition occurs, the keypad(s) on the system will start to beep. Press [5] while in Trouble mode to view the affected zones. ***NOTE:*** *A Fire zone trouble will be generated and displayed in the armed state.*
6	**Zone Tamper:** A zone configured for Double End Of Line resistor supervision has a tamper condition, or the tamper switch is open on a wireless device. When a tamper condition occurs, the keypad(s) will start to beep. Press [6] while in the Trouble mode to view the affected zones. If a zone is tampered or faulted, it must be fully restored to clear the trouble. ***NOTE:*** *By enabling* Tampers/Faults Do Not Show as Open *in section [013], option [4], Faults and Tampers will not show as open on the keypad, and will be hidden from the end user. If the option is disabled, Faults and Tampers will be displayed on the keypad* ***NOTE:****Once a zone is tampered or faulted, it must be completely restored before the trouble condition will clear.*
7	**Device Low Battery:** A wireless device has a low battery condition. Press [7] one, two, or three times to view which devices are experiencing battery failure. An LED keypad will indicate battery failure using zone lights 1 to 8. The following will occur: Keypad beeps: Keypad displays: Press [7] 1 Zones with low batteries (LED keypad - zone lights 1 to 32) Press [7] again 2 Handheld keypads with low batteries (LED keypad - zone lights 1 to 4) Press [7] again 3 Wireless keys with low batteries (LED keypad - zone lights 1 to 8) *To view the battery conditions of wireless keys 9 through 16, you must use an LCD keypad.*
8	**Loss of System Time:** When the panel is powered up, the internal clock needs to be set to the correct time. This trouble is cleared when an attempt is made to reset the clock.

[*][3] Alarm Memory

The Memory (or System) light will be on if any alarm occurred during the last armed period or – in the case of 24 hour zones – if an alarm occurred while the panel was disarmed.

To view alarm memory, press [*][3]. The keypad will flash the Memory (or System) light and the zone indicator lights corresponding to the alarm or tamper conditions which occurred during or since the last armed period. To clear the Memory (or System) light, arm and disarm the system.

[*][4] Door Chime On/Off

The door chime feature is used to sound a tone from the keypad whenever a zone programmed as a chime zone is activated. (See 5.3 *"Zone Attributes"* on page 16.) If the door chime feature is enabled, the keypad will emit five short beeps whenever a chime zone is activated. Designated entry/exit doors are often defined as chime zones. The feature can be turned on or off while the system is armed or disarmed.

[*][5] Programming Access Codes

There are 37 access codes available to the user. They are:

Access code (40) ..... One master code

Access codes (01)-(32)..... 32 general access codes

Access codes (33)-(34)..... Two duress codes

Access codes (41)-(42)..... Two supervisor codes

All access codes have the ability to arm or disarm the system and can activate the PGM Outputs using the [*][7] commands. Access codes can be either four or six digits (See 5.1 *"Programming Security Codes"* on page 15.)

For a description of how to program access codes from LCD or LED keypads, see the PC585 Instruction Manual.

Master Code – Access Code (40)

This code can be used to program all access codes. The Master code has all Access Code Attributes enabled by default, so that the Master code can be used to perform any keypad function. Master code attributes cannot be changed. If the **Master Code Not Changeable** option is enabled, (section [015], option [6]) the Master Code can only be changed by the Installer.

General Access Codes – Access Codes (01) to (32)

General access codes can arm and disarm the system. When the **Code Required for Bypassing** option is enabled, users will need to enter a valid access code when bypassing zones. Individual access codes can have the Zone Bypassing attribute disabled under Access Code Attribute programming.

For more information regarding access code options, please see 5.1 *"Programming Security Codes"* on page 15.

Duress Code – Access Code (33) and (34)

Duress codes will send a duress reporting code to the central station when entered.

NOTE: *If a duress code is programmed, when it is used, the panel will always send a reporting code to the central station, even if the attributes of the duress code are turned off.*

Supervisor Codes – Access Code (41) and (42)

These codes can be used to program general access and duress codes. The two supervisor codes have all attributes on by default. These settings can be changed.

Access Code Attributes

There are three access code attributes which can be programmed for each code.

To program each attribute, enter [*][5][Master Code][9] to enter the attribute programming mode. Then enter the code number [01-32,33,34,41,42]. Enter the attribute number:

Attribute [1]..... User enabled for arming, disarming, alarm reset, [*][7][1-2] options, auto arm cancellation

Attribute [2]..... Not used

Attribute [3]..... Zone bypassing enabled

Attribute [4]-[6] .... Not used

Attribute [7]..... Bell squawk on access code entry

Example: You can use the arm/disarm bell squawk attribute to have wireless key access codes squawk the bell, while other codes are silent. To do this, enable attribute [7] on all access codes associated with wireless keys.

NOTE: *If you enable the Bell Squawk on Arming/Disarming (section [014], option [1]), the bell will sound arm/disarm bell squawks for all access codes, regardless of the programming for attribute [7]. See 5.17 "Arming/Disarming Options" on page 24.*

NOTE: *Master code attributes cannot be changed.*

[*][6] User Functions

This command can be used to program several different functions:

To program User Functions:

1. Press [*][6][Master Code]. The Program (or System) light will flash.
2. Press the number [1] to [6] for the item to be programmed.

- [1] – Time and Date
  The time and date must be accurate for the auto-arm or test transmission functions to work properly and for the event buffer to time and date stamp all events.
  - Enter the time (hour and minute) using 24hr format [HH MM] from 00:00 to 23:59.
  - Enter the date by month, day and year [MM DD YY].
- [2] – Auto-Arm Enable/Disable
  To enable or disable auto-arming, press [2]. The keypad will sound three short beeps when auto-arm is enabled and one long beep when disabled. For more information, see 3.3 *"Automatic Arming"* on page 8.
- [3] – Auto-Arm Time
  The system can be programmed to arm automatically at a pre-set time. When programming the auto-arm time, enter the time (hour and minute) using 24hr format [HH MM]. For more information, see 3.3 *"Automatic Arming"* on page 8.
- [4] – System Test
  When [4] is pressed the panel will test the bell output, keypad lights and the communicator for two seconds. The panel will also send a System Test Reporting code, if programmed. (See 5.8 *"Communicator – Reporting Codes"* on page 18.)
- [5] – Enable DLS (Downloading)
  When [5] is pressed, the panel will enable the downloading option for one hour or six hours depending on the option selected in programming section [702]: [7]. During this time, the panel will answer incoming downloading calls. (See 5.10 *"Downloading"* on page 20.)
- [6] – User Initiated Call-Up
  When [6] is pressed, the panel will initiate a call to the downloading computer.

Additional Features Available from the LCD Keypad

Additional features, including access to the event buffer, are available using the LCD keypad. Use the arrow keys (< >) to scroll through the [*][6] menu and press the [*] key to select the following commands:

Viewing the Event Buffer from an LCD Keypad

Select "View Event Buffer" from the [*][6] menu. The keypad will display the event, event number, time and date along with the zone number and access code, if applicable. Press [*] to toggle between this information and the event itself. Use the arrow keys (<>) to scroll through the events in the buffer. When you have finished viewing the event buffer, press [#] to exit.

Brightness Control

You can select from 10 different backlighting levels. Use the arrow keys (< >) to scroll to the desired backlighting level. Press [#] to exit.

Contrast Control

You can select from 10 different display contrast levels. Use the arrow keys (< >) to scroll to the desired contrast level. Press [#] to exit.

Keypad Sounder Control

You can select from 21 different keypad tones. Use the arrow keys (< >) to scroll to the desired keypad sound level and press [#] to exit. This feature can be accessed on LED keypads by pressing and holding the [*] key.

[*][7] Command Output Functions

The user can activate programmable output functions using the [*][7][1-2] commands. The outputs may be activated when the system is either armed or disarmed.

[*] [7] [1] – Command Output Option #1:

Press [*] [7] [1] [Access Code, if required] to activate outputs programmed as PGM output option [19]. This output can be used for operating devices such a garage door opener, lighting or door strikes.

[*][7][2] – Command Output Option #2:

Press [*][7][2][Access Code, if required] to activate all outputs programmed as one of PGM output options [03] or [20].

Special Note: Traditionally, [*][7][2] has been reserved for resetting smoke detectors. Smoke detectors should now be programmed as output [03] "Sensor Reset" . If using output option [03], do not program [20] Command Output Option #2. Please see 5.11 *"PGM Output Options"* on page 21 for more information.

[*][8] Installer's Programming

Enter [*][8] followed by the Installer's Code to access Installer's Programming. See sections 4 and 5 for more information.

[*][9] Arming Without Entry Delay

When the system is armed with the [*][9] command, the panel will cancel the entry delay. Delay 1 and Delay 2 type zones will be instant and Stay/Away zones will be bypassed as soon as the exit delay has ended (see section 5.2 *"Zone Programming"* on page 15). The user must enter a valid access code after pressing [*][9].

[*][0] Quick Arm

If the **Quick Arm** option is enabled (section [015], option [4]), enter [*][0] to arm the panel without an access code. (See 5.17 *"Arming/Disarming Options"* on page 24.) If the Quick Arm option is disabled, users will need to enter an access code after pressing a function key.

NOTE: *Quick Arm cannot be used to cancel auto arm.*

[*][0] Quick Exit

The Quick Exit function, if enabled, will allow someone to leave an armed premises through a Delay type zone without having to disarm and re-arm the system. (See 5.17 *"Arming/Disarming Options"* on page 24.)

When [*][0] is entered, the panel will provide a two minute window for the user to exit the premises. During this time, the panel will ignore only one activation of a Delay zone. When the Delay zone is secured, the panel will end the two minute quick exit delay.

If a second Delay zone is tripped, or if the zone is not restored after two minutes, the panel will begin entry delay 1.

NOTE: *If the Exit Delay is in progress, performing a Quick Exit will not extend the Exit Delay.*

3.5 Function Keys

There are five function keys on each keypad labelled Stay, Away, Chime, Reset and Exit. Each of these keys is programmed by default to perform one of the functions described below. Press and hold the appropriate key for two seconds to activate a function.

If the **Quick Arm** option is disabled (section [015], option [4]), users will need to enter an access code after pressing a function key.

NOTE:*On the PC1555RKZ keypad, use number keys 1 - 5 for the function keys.*

"Stay" – (03) Stay Arm

The system will arm in the Stay mode (see 3.2 *"Auto Bypass – Stay Arming"* on page 8). Enable the Quick Arm feature (programming section [015], option [4]) to have this key function without the need to enter an access code. If Quick Arm is not enabled, the user will have to enter an access code before the system will stay arm.

"Away" – (04) Away Arm

The system will arm in the Away mode (see 3.2 *"Auto Bypass – Stay Arming"* on page 8). Enable the Quick Arm feature (programming section [015], option [4]) to have this key function without the need to enter an access code. If Quick Arm is not enabled, the user will have to enter an access code before the system will away arm.

When the panel is being Away armed, users can restart the exit delay once, by pressing the Away button before the exit delay expires. This will not work if the panel is being Stay armed.

"Chime" – (06) Door Chime On / Off

The Door Chime feature will turn ON or OFF. (See *"[*][4] Door Chime On/Off"* on page 9.)

"Reset" – (14) Sensor Reset or [*][7][2]

The panel will activate all PGM outputs programmed as option [03] Sensor Reset or [20] Command Output Option #2. (See "[*][7] Command Output Functions" .)

"Exit" – (16) Activate Quick Exit

The panel will activate the Quick Exit feature (See *"[*][0] Quick Exit"* on page 11.)

Additional Function Key Options

The programming of any function key on any keypad may be changed to one of the options listed below. (See 2.5 *"Keypad Assignment"* on page 4 for instructions on changing function key programming.) Each option is listed according to the programming code, followed by the corresponding [*] key command. For more information regarding each function, please refer to the appropriate part of Section 3.4, "[*] Commands".

NOTE: *The PC5509 function keys cannot be changed from the defaults listed above.*

[00] **Null Key:** The key is not used and will perform no function when pressed.

[01]-[02] For future use

[03] **Stay Arm:** As described above.

[04] **Away Arm:** As described above.

[05] **[*][9] No-Entry Delay Arm:** A valid access code must also be entered.

[06] **[*][4] Door Chime On / Off:** As described above.

[07] **[*][6][----][4] System Test:** A valid master code must also be entered.

[08] **[*][1] Bypass Mode:** A valid access code may need to be entered.

[09] **[*][2] Trouble Display**

[10] **[*][3] Alarm Memory**

[11] **[*][5] Programming Access Codes:** A valid master code must also be entered.

[12] **[*][6] User Functions:** A valid master code must also be entered.

[13] **[*][7][1] Command Output Option #1:** A valid access code may need to be entered.

[14] **[*][7][2] Reset (Command Output Option #2):** As described above.

[15] **For future use**

[16] **[*][0] Quick Exit:** As described above.

[17] **[*][1] Reactivate Stay/Away Zones**

[18] - [20] For future use

3.6 Features Available for the LCD5500Z

These features are only available for LCD5500Z keypads with zone inputs:

Automatic Scrolling of Alarms in Memory

The LCD5500Z keypad allows automatic scrolling through alarms in memory while the keypad is idle. This feature, if enabled, will override the clock display. This option can be programmed in LCD programming section [66], option [4].

24 Hour Time Display Option

The LCD5500Z can be programmed to display time using a 24- hour clock, instead of a 12-hour, am/pm clock. This option can be programmed in LCD programming section [66], option [3].

Keypad Zones

See 2.11 *"Keypad Zones"* on page 6.

Viewing Troubles While Armed

See *"[*][2] Trouble Display"* on page 9 for information on how to view troubles.

Backlighting Boost

The LCD5500Z, PC55XXZ and PC1555RKZ zone input keypads will provide extra number pad lighting when any key is pressed. The backlighting boost will last for an additional 30 seconds after the last keypress.

Section 4: How to Program

The following section of the manual describes the Installer's Programming function and how to program the various sections.

***NOTE:** Read the following section of the manual very carefully before you begin programming. We also recommend filling out the Programming Worksheets section before you program the panel.*

For your reference, the corresponding programming sections for the functions listed are highlighted in text boxes such as this one.

4.1 Installer's Programming

Installer's Programming is used to program all communicator and panel options. The Installer's Code is [5555] by default but should be changed to prevent unauthorized access to programming.

Installer's Code. . . . . Section [006]

From an LED Keypad:

1. Enter [*][8][Installer's Code].
   The Program light (or System light on the PC1555RKZ) will flash to indicate that you are in programming mode.
   The Armed light will turn on to indicate that the panel is waiting for the three-digit programming section number.
2. Enter the three-digit section number corresponding to the section you wish to program.
   The Armed light will turn off.
   The Ready light will turn on to indicate that the panel is waiting for the information required to complete programming the selected section.
3. Enter the information required to complete section programming (i.e.: numbers, HEX data, or ON/OFF options).

***NOTE:** If the three-digit section number entered is invalid, or if the module which pertains to the section is not present, the keypad will sound a two second error tone.*

From an LCD Keypad:

1. From any keypad, enter [*][8][Installer's Code]. The Keypad will display 'Enter Section' followed by three dashes.
2. Enter the three-digit number corresponding to the programming section number you wish to program. The keypad will now display the information required to complete programming the selected section.
3. Enter the information required to complete section programming (i.e.: numbers, HEX data, or ON/OFF options).

If you enter information into a section and make a mistake, press the [#] key to exit the section. Select that section again and re-enter the information correctly.

***NOTE:** There must be one digit in each box in the programming section in order for the change to be valid.*

4.2 Programming Decimal Data

A set number of programming boxes are allotted for each section requiring decimal data (e.g.: codes, telephone numbers). If a digit is entered for each program box, the panel will automatically exit from the selected programming section. The Ready light will turn OFF and the Armed light will turn ON.

On the PC1555RKZ and PC5508Z keypads, you can also press the [#] key to exit a programming section without entering data for every box. This is handy if you only need to change digits in the first few programming boxes. All other digits in the programming section will remain unchanged.

4.3 Programming HEX Data

On occasion, hexadecimal (HEX) digits may be required. To program a HEX digit press the [*] key. The panel will enter HEX programming and Ready light will begin to flash.

The following are the numbers which should be pressed to enter the appropriate HEX digit:

1 = A 2 = B 3 = C 4 = D 5 = E 6 = F

Once the correct HEX digit has been entered, the Ready light will continue to flash. If another HEX digit is required, press the corresponding number. If a decimal digit is required, press the [*] key again. The Ready light will turn on and the panel will return to regular decimal programming.

Example:

To enter 'C1' for a closing by user 1, you would enter:

[*][3][*], [1]:

- [*] to enter Hexadecimal mode (Ready light flashes)
- [3] to enter C
- [*] to return to decimal mode (Ready light is solid)
- [1] to enter digit 1

***NOTE:** If Ready light is flashing, any number you enter will be programmed as the HEX equivalent.*

If you are using a pulse communications format, a decimal zero [0] does not transmit. Programming a zero [0] tells the panel not to send any pulses for that digit. Decimal zero [0] is a filler digit. To transmit a zero [0], it must be programmed as a Hexadecimal 'A'.

Example:

For the three digit account number '403', you would enter:

[4], [*][1][*][3], [0]:

- [4] to enter the digit 4
- [*] to enter Hexadecimal mode (Ready light flashes)
- [1] to enter A
- [*] to return to decimal mode (Ready light is solid)
- [3] to enter the digit 3
- [0] to enter the digit 0 as a filler digit.

4.4 Programming Toggle Option Sections

Some programming sections contain several toggle options. The panel will use zone lights 1 through 8 to indicate if the different options are enabled or disabled. Press the number corresponding to the option to turn it ON or OFF. Once all the toggle options have been selected correctly, press the [#] key to exit the section and save the changes. The Ready light will turn OFF and the Armed light will turn ON.

Refer to the Programming Worksheets in this manual to determine what each option represents and whether the light should be ON or OFF for your application.

4.5 Viewing Programming

LED Keypads

Any programming section can be viewed from an LED keypad. When a programming section is entered, the keypad will immediately display the first digit of information programmed in that section.

The keypad displays the information using a binary format, according to the following chart:

See Hex data entry instructions

Value	0	1	2	3	4	5	6	7	8	9	A	B	C	D	E	F
Zone 1	☐	■	☐	■	☐	■	☐	■	☐	■	☐	■	☐	■	☐	■
Zone 2	☐	☐	■	■	☐	☐	■	■	☐	☐	■	■	☐	☐	■	■
Zone 3	☐	☐	☐	☐	■	■	■	■	☐	☐	☐	☐	■	■	■	■
Zone 4	☐	☐	☐	☐	☐	☐	☐	☐	■	■	■	■	■	■	■	■

☐ Zone Light OFF
■ Zone Light ON

Press any of the Emergency Keys (Fire, Auxiliary or Panic) to advance to the next digit. When all the digits in a section have been viewed, the panel will exit the section; the Ready Light will turn OFF and the Armed light will turn ON, waiting for the next three-digit programming section number to be entered. Press the [#] key to exit the section

LCD Keypad

When a programming section is entered, the keypad will immediately display all the information programmed in that section. Use the arrow keys (< >) to scroll through the data being displayed. Scroll past the end of the data displayed or press the [#] key to exit the section.

Section 5: Program Descriptions

The following section explains the operation of all programmable features and options and provides a summary of all corresponding programming locations.

5.1 Programming Security Codes

There are three codes which can be programmed by the installer in the Installer's Programming function: the **Master code**, the **Installer's code**, and a **Maintenance code**. All other access codes can be programmed through the [*][5] command. (See *"[*][5] Programming Access Codes"* on page 10.)

The master code can also be programmed by the user as access code (40). If the **Master Code Not Changeable** option is enabled, the system master code can only be changed by the installer.

The Maintenance code can only be used to arm and disarm the system. The Maintenance code cannot bypass zones, use [*][9] to arm the system, cancel autoarming, or perform [*][7] command functions. There will be no arm/disarm bell squawks when the Maintenance code is used.

General access codes can arm and disarm the system. When the **Code Required for Bypassing** option is enabled, users will need to enter a valid access code when bypassing zones. Individual access codes can have the Zone Bypassing attribute disabled under Access Code Attribute programming. (See *"[*][5] Programming Access Codes"* on page 10.)

If the **6-Digit User Access Codes** option is enabled, all the access codes may be programmed with six digits instead of four, with the exception of the Panel ID code and the Downloading Access Code.

Installer's Code	Section [006]
Master Code	Section [007]
Maintenance Code	Section [008]
Master Code Not Changeable	Section [015]: [6]
Code Required for Bypassing	Section [015]: [5]
6-digit User Access Codes	Section [701]: [5]

5.2 Zone Programming

Zones 1-8 are enabled by default. Disable unused zones, or enable additional zones in programming sections [202] - [205].

The zone definitions describe how each of the zones you use will operate. Program a two-digit code describing the zone definition in sections [001] - [004]. Select a definition from the list below.

In addition, each zone has eight different attributes which may be programmed in sections [101] to [108]. (See 5.3 *"Zone Attributes"* on page 16.)

Zone Definitions

[00] Null Zone

The zone is vacant. Unused zones should be programmed as Null zones.

[01] Delay 1 Zone

This zone type, normally used for entry/exit doors, can be violated during the exit delay time without causing an alarm. Once the exit delay has expired, opening the zone will start the entry delay timer. During the entry delay time, the keypad buzzer will sound steadily to advise the user that the system should be disarmed. If the panel is disarmed before the entry time expires, no alarm will be generated.

[02] Delay 2 Zone

The Delay 2 entry delay time can be set independently of Delay 1 in programming section [005] (System Times).

[03] Instant Zone

This zone type will cause an instant alarm if it is violated when the panel is armed. Typically, this zone is used for windows, patio doors or other perimeter zones, and glass break detectors.

[04] Interior Zone

This zone will not cause an alarm if violated during the entry delay. If the zone is violated before the entry delay has begun, it will cause an instant alarm. Typically, this zone is used for interior protection devices, such as motion detectors.

[05] Interior Stay/Away Zone

This zone type works similarly to the Interior zone type, except that it will be automatically bypassed under the following conditions:

- When the panel is armed in the Stay Mode. (See 3.5 *"Function Keys"* on page 11.)
- When the panel is armed without entry delay. (See *"[*][9] Arming Without Entry Delay"* on page 11.)
- When the panel is armed with an access code and a Delay type zone is NOT tripped during the exit delay.

The automatic bypass prevents the user from having to manually bypass interior type zones when arming at home. This zone is typically used for interior protection devices, such as motion detectors.

[06] Delay Stay/Away Zone

This zone type will operate similarly to Interior Stay/Away zones, except that it will always provide an entry delay. Typically, this zone is used for interior protection devices, such as motion detectors. This zone option will help prevent false alarms since it always provides an entry delay time for the user to turn off the panel.

NOTE: *Hardwire motion detectors covering entry/exit doors that are using wireless transmitters must be programmed as Delay Stay/Away. If not, the panel may see the motion detector violation before the entry/exit transmitter has time to transmit to the receiver, causing a false alarm.*

[07] Delayed 24 Hour Fire Zone

NOTE:*Do not wire Fire zones on keypad zone terminals if the DEOL supervision option is enabled for the panel (section [013], option [2]).*

When this zone is violated, the alarm output will be immediately activated (pre-alert) but the communicator will be delayed for 30 seconds. If the user presses any key on any keypad during this delay, the alarm output and the communicator will be delayed an additional 90 seconds, giving the user time to correct the problem. If the zone is still violated after the 90 second delay, the panel will sound the alarm output and delay the communicator for 30 seconds.

If the user does not press a key during the 30 second pre-alert, the alarm output will latch and the panel will communicate the alarm to the central station. The alarm will sound until

the Bell Cutoff time expires (Section [005] "System Times"), or until a code is entered. (See 5.13 *"Bell"* on page 23.)

NOTE:*If a second Fire type zone is violated or if the Fire keys are pressed during the delay period, the panel will latch the alarm output and will immediately communicate the alarm.*

A violated Fire zone will be displayed on all keypads and can be delayed at any keypad. Typically this zone is used for latching smoke detectors.

[08] Standard 24 Hour Fire Zone

NOTE:*Do not wire Fire zones on keypad zone terminals if the DEOL supervision option is enabled for the panel (section [013], option [2]).*

When this zone is violated, the panel will immediately latch the alarm output and communicate to the central station. The alarm will sound until the Bell Cutoff time expires (Section [005] "System Times"), or until a code is entered. (See 5.13 *"Bell"* on page 23.)

A violated Fire zone will be displayed on all keypads. Typically this zone is used for pull stations.

[09] 24 Hour Supervisory Zone

If this zone is violated when the system is either armed or disarmed, the panel will report to the central station, and will log the zone alarm to the event buffer. This zone gives a silent alarm by default.

NOTE:*Do not wire 24-Hour Supervisory zones on keypad zone terminals.*

[10] 24 Hour Supervisory Buzzer Zone

If this zone is violated when the system is either armed or disarmed, the panel will immediately latch the keypad buzzer until a valid access code is entered and will immediately communicate to the central station.

[11] 24 Hour Burglary Zone

If this zone is violated when the system is either armed or disarmed, the panel will immediately latch the alarm output and communicate to the central station. The alarm will sound until the Bell Cutoff time expires (Section [005] "System Times"), or until a code is entered. (See 5.13 *"Bell"* on page 23.)

[12] - [20]

The following zone definitions operate similar to the 24 Hour Burglary except for the System Event output type and the SIA identifier:

[12] 24 Hour Holdup Zone - This zone gives a silent alarm by default.

[13] 24 Hour Gas Zone

[14] 24 Hour Heating Zone

[15] 24 Hour Medical Zone

[16] 24 Hour Panic Zone

[17] 24 Hour Non-Medical Emergency Zone

[18] 24 Hour Sprinkler Zone

[19] 24 Hour Water Flow Zone

[20] 24 Hour Freezer Zone

[21] 24 Hour Latching Tamper

If this zone is violated, the installer must enter Installer's Programming before the system can be armed.

NOTE: *Wireless zones should not be programmed as zone types [22] - [24].*

[22] Momentary Keyswitch Arm Zone

Momentary violation of this zone will alternately arm/disarm the system.

[23] Maintained Keyswitch Arm Zone

When this zone is violated, the system will arm. When this zone is secured, the system will disarm.

[24] LINKS Answer Zone

Downloading can be performed via the LINKS1000 Cellular Communicator (if used) when the conventional telephone line is disconnected. If this operation is desired, connect the RING terminal of the LINKS1000 to a LINKS Answer zone. (See 2.10 *"LINKS Zone Wiring"* on page 6.) Refer to the LINKS1000 Installation Manual for more information.

NOTE:*Do not wire LINKS Answer zones on keypad zone terminals.*

[25] Interior Delay Zone

This zone type is normally used with motion detectors and has a standard exit delay time.

If the panel is Away armed (a delay zone is violated during the exit delay, or the Away function key is used), the Interior Delay zone will work the same as the Interior zone [04].

If the panel is Stay armed (a delay zone is NOT violated during the exit delay, the Stay key is used, or [*][9] is used for arming), a violation of the zone will initiate Entry Delay 1.

[87] Delayed 24 Hour Fire (Wireless)

This zone type operates the same as [07] Delayed 24 Hour Fire Zone and must be used if the smoke detector is wireless.

[88] Standard 24 Hour Fire (Wireless)

This zone type operates the same as [08] Standard 24 Hour Fire Zone and must be used if the smoke detector is wireless.

Zone Definitions . . . . . [001]
Zone Assignments . . . . . [202]

5.3 Zone Attributes

NOTE: *All zones, with the exception of 24 Hour and Fire, will provide an exit delay.*

NOTE: *Do not change the attributes for Fire Zones from the default settings.*

Additional zone attributes can be programmed to customize the operation of a zone for a specific application. The following attributes are programmable for each zone:

- **Audible / Silent** – This attribute determines whether or not the zone will activate the alarm output.
- **Pulsed / Steady** – This attribute determines whether the alarm output will be steady or will pulse on and off every second.
- **Activate Chime** – This attribute determines whether or not the zone will activate the chime feature. (See *"[*][4] Door Chime On/Off"* on page 9.)
- **Bypass Enable** – This attribute determines whether or not the zone can be manually bypassed. (See *"[*][1] Bypassing and Activating Stay/Away Zones"* on page 8.)
- **Force Arm Enable** – This attribute determines whether or not the system can be armed while a zone is violated. At the end of the exit delay, if this type of zone is violated, it will be ignored by the panel. Once the zone is secured, it will be monitored by the system. This zone attribute, for example, will allow the user to arm the system with the garage door open. Later, when the door is closed, it will be armed along with the rest of the system. **Do not program this attribute for 24Hr zones.**
- **Swinger Shutdown Enable** – This attribute determines whether or not the panel will shut down the communicator

and bell for a zone once its swinger limit has been reached. (See 5.19 *"Swinger Shutdown"* on page 25.)

- ***Transmission Delay Enable*** – This attribute determines whether or not the panel will delay communicating the alarm reporting code for the programmed Transmission Delay Period. (See 5.15 *"Transmission Delay"* on page 23.)
- **Wireless Zone** – This attribute determines which zones are to have wireless devices. This allows the panel to generate a low battery trouble and zone supervisories for the wireless zones.

NOTE: *Any zone with the wireless attribute enabled will not cause an alarm for a fault condition when armed (or any time for 24-hour zones).*

Zone Attributes . . . . . Sections [101] - [108]: [1] - [8]

5.4 Assigning Keypad Zones

"Z" keypads have zone inputs to which devices—such as door contacts—can be connected. (See 2.11 *"Keypad Zones"* on page 6 for wiring information.)

Once the keypad zones are installed, assign the zone in programming section [020] **Keypad Zone Assignments**.

Enter the 2 digit zone designated for each keypad (slot) from 01-08.

Keypad Zone Assignments . . . . . [020]

5.5 Communicator – Dialing

If the **Communicator Disable** option is selected, the panel will not attempt to call central station. If communication is enabled, the panel will attempt to call central station when an event with a valid reporting code occurs. (See 5.8 *"Communicator – Reporting Codes"* on page 18.)

The **Communicator Call Direction** options are used to select which telephone number the panel will dial when an event occurs.

If the **DTMF Dialing** option is enabled, the panel will dial using DTMF (touch tone). If the **Switch to Pulse Dial** option is enabled, the panel will switch to pulse dialing on the fifth attempt to call the central station. When this option is disabled, the panel will always dial using DTMF. If DTMF Dialing is disabled, the panel will always pulse dial.

When the **Force Dialing** option is enabled, the panel will dial out regardless of the presence of dial tone. Each dialing attempt will follow this pattern:

a) the panel picks up the telephone line and searches for dial tone for 5 seconds
b) if no dial tone is found, the panel hangs up and waits for 20 seconds
c) the panel picks up the telephone line again and searches for a dial tone for 5 seconds
d) the panel will then dial regardless of the presence of dial tone

If there is no initial handshake recognized within 40 seconds the panel will then hang up the line.

If the Force Dialing option is disabled, each attempt will still follow the above pattern, except that the panel will not dial in step d if no dial tone is detected.

The **Delay Between Dialing Attempts** timer adds a delay before the next call is dialed.

If the **Busy Tone Detection** option is enabled, the panel will hang up after detecting busy tone for 5 seconds and will redial after the amount of time programmed in the Delay Between Dialing Attempts section.

Maximum Dialing Attempts determines the maximum number of attempts the panel will make to send a signal to the central station before indicating a Failure to Communicate (FTC) trouble condition. The 3rd Telephone Number can be used to back up the 1st in this situation. (See 5.7 *"Communicator – Telephone Numbers"* on page 17.) If a later communication attempt is successful, the FTC reporting code(s) programmed in section [351] will be transmitted along with the unreported events from an earlier unsuccessful communication.

When **Bell on FTC when Armed** is enabled in programming section [702], option [8], an FTC during the armed period will sound an Audible Alarm for the length of Bell time-out or until the system is disarmed. If FTC Trouble Only when Armed is enabled, only the keypad buzzer will sound trouble beeps every 10 seconds until a key is pressed.

Post Dial Wait for Handshake determines the amount of time the panel will wait for a valid handshake from the receiver. If the panel does not hear the handshake it will consider the call a failed attempt, hang up and try again.

The **Pulse Dialing Make/Break Ratio** option can change the Make/Break ratio to 33/67 from the North American ratio of 40/60.

With **ID Tone Enabled** the panel will pulse a tone on the telephone line to indicate that the panel is on the line.

The **2100Hz/1300Hz ID Tone** option selects the frequency of the ID tone that is pulsed on the line.

NOTE:*Contact your local telephone company to confirm which settings should be used.*

DTMF or Pulse Dialing . . . . . Section [380]: [3]
Switch to Pulse Dialing on Fifth Attempt . . . Section [380]: [4]
Communicator Enable/Disable . . . . . Section [380]: [1]
Communicator Call Direction Options . . . Section [361]-[368]
Force Dialing . . . . . Section [702]: [2]
Delay Between Dialing Attempts . . . . . Section [703]
Busy Tone Detection . . . . . Section [701]: [6]
Maximum Dialing Attempts . . . . . Section [160]
Post Dial Wait for Handshake . . . . . Section [161]
Pulse Dialing Make/Break Ratio. . . . . Section [702]: [1]
ID Tone Enabled . . . . . Section [702]: [5]
2100Hz/1300Hz ID Tone . . . . . Section [702]: [6]
Bell on FTC/Trouble Only . . . . . Section [702]: [8]

5.6 Communicator – Account Numbers

The account number is used by the central station to distinguish between panels. There are two account numbers programmable for the PC585.

First Account Code (4 digits). . . . . Section [310]
Second Account Code (4 digits) . . . . . Section [311]

5.7 Communicator – Telephone Numbers

The panel can use three different telephone numbers for communicating with the central station. The **First Telephone Number** is the primary number, the **Second Telephone Number** is the secondary number and the **Third Telephone Number** will back up the First telephone number if enabled.

NOTE:*The Third Telephone Number will NOT back up the Second Telephone Number.*

***NOTE:** If you enter a telephone number section (sections [301] - [303]) at an LED keypad, pressing [#] will delete the programmed telephone number and change all the digits to [F].*

If the **Alternate Dial** option is enabled, the panel will alternate between the first and third telephone numbers when attempting to call the central station. If the option is disabled, the panel will only attempt to call the Third telephone number after failing to communicate with the first telephone number.

***NOTE:**To use the Third Telephone Number, you must enable it in section [380], option [5], and program it in section [303].*

***NOTE:**Telephone numbers can be up to 32 digits. This allows you to add special digits if required. To program the telephone number, enter the numbers 0 through 9 as required. The following is a list of programmable HEX digits and the functions they perform:*

HEX (B) - simulates the [*] key on a touch tone telephone
HEX (C) - simulates the [#] key on a touch tone telephone
HEX (D) - forces the panel to search for dial tone
HEX (E) - forces the panel to pause for 2 seconds
HEX (F) - marks the end of the telephone number

***NOTE:**The first digit of all telephone numbers must be the HEX digit 'D' for dial tone search, or HEX digit 'E' for a two-second pause.*

First Telephone Number . . . . . Section [301]
Second Telephone Number. . . . . Section [302]
Third Telephone Number. . . . . Section [303]
Third Telephone Number Enable. . . . . .Section [380]: [5]
Alternate Dial. . . . . .Section [380]: [6]

5.8 Communicator – Reporting Codes

The panel can be programmed to report events to the central station by sending the **Reporting Code** programmed for a particular event.

Reporting codes can be one or two digits and can use HEX digits (A through F). For a complete description of reporting codes which can be programmed and lists of automatic Contact ID and SIA format codes, please see Appendix A: *"Reporting Codes"* on page 43.

***NOTE:**Do not use the digit C in a reporting code when using Pager Format. In most cases, the digit C will be interpreted as a [#], which will terminate the page before it has finished.*

Reporting Codes . . . . . Section [320] to [353]

Cross Zone Police Reporting Code

The **Cross Zone Police Code Alarm** will be sent when two different alarms occur during any armed-to-armed period. When an alarm occurs while the panel is armed and a second alarm occurs on a different zone during the same armed period, or after the system is disarmed, this code will be sent. All zone types contribute to this alarm. The cross zone police code will be transmitted immediately unless either or both zones have the **Transmission Delay** attribute enabled. If so, the code will be delayed for the programmed transmission delay time.

Cross Zone Police Code Alarm . . . . . Section [328]

Zone Restorals

If the **Restoral on Bell Time-out** option is selected, the panel will send the **Zone Restoral Reporting Code** for the zone if the bell cut-off time has expired and the zone is secured. If the zone is not secured when the bell cut-off time expires, the panel will send the restoral immediately once the zone is secured, or when the system is disarmed. If the Restoral on Bell Time-out option is not selected, the panel will immediately send the Zone Restoral Reporting Code when the zone is secured, regardless of whether or not the alarm output is active.

***NOTE:**24 Hour type zones will report the restoral immediately when the zone is secured.*

Restoral on Bell Time-out . . . . . Section [380]: [2]

Closings (Arming Codes)

If the **Closing Confirmation** option is enabled, once the exit delay expires, the keypad will sound a series of eight beeps to confirm to the user that the closing code was sent and received by the central station.

Closing Confirmation . . . . . Section [381]: [4]

Openings/Closings by Wireless Key

If you are using a PC5132 v3.0 or higher, wireless keys with access codes may be identified when they are used to arm or disarm the system: the panel will log and transmit opening or closing by access code (the same as if an access code had been used to arm/disarm the system). If wireless keys with no access code are used, the event will be logged and transmitted as opening or closing by keyswitch.

The **Function Keys Require Code** option must be selected (section [015], option 4 OFF) in order for wireless keys to be identified for arming. Disarming will always be logged by access code, if one is programmed for the Key, regardless of this option.

AC Failure Trouble Alarm Code

To prevent the panel from transmitting an **AC Failure Trouble Alarm** reporting code during short power outages, the panel will not send the signal unless AC power is lost for the amount of minutes programmed for the AC Failure Communication Delay. The AC Failure Trouble Restoral reporting code follows the AC failure communication delay as well.

***NOTE:**If AC Failure Communications Delay is programmed as "000," then the AC failure transmission will be immediate.*

AC Failure Communication Delay. . . . . Section [370]

Wireless Maintenance

The panel will transmit a **Wireless Device Low Battery Alarm** reporting code if a low battery condition is indicated by a detector. The transmission of the trouble will be delayed by the number of days programmed for **Zone Low Battery Transmission Delay**. The Wireless Device Low Battery Restoral reporting code will be transmitted when the problem is corrected. The specific zone that caused the trouble will be recorded in the event buffer.

***NOTE:** The restoral will not be transmitted until all detectors indicate good battery conditions.*

Wireless Maintenance Reporting Codes . . . . . Section [353]
Wireless Device Battery Transmission Delay . . Section [370]

Arming and Activity Delinquency

When **Delinquency Follows Arming (Days)** is selected, the Delinquency reporting code is sent whenever the panel is not armed within the number of days programmed for the **Delinquency Transmission Cycle.**

NOTE: *If the Delinquency Transmission Cycle is set for one day, there must be 24 hours of no arming or disarming before the Delinquency Code will be sent. After a Delinquency Code has been transmitted, it will not be sent again until the system has been armed and disarmed.*

When **Delinquency Follows Zone Activity (hours)** is enabled, if there is no activity on zones in the system, the **Delinquency Transmission Cycle Timer** in Section [370] will begin counting in hours. When the counter reaches the programmed time, the panel will communicate the Delinquency reporting code to the central station, if programmed. If there is a closing or zone activity present on the system at any time, the counter will be reset.

NOTE:*Activity Delinquency will not be reported while the panel is armed in Away mode.*

NOTE:*Activity on manually bypassed zones will not reset the timer.*

NOTE:*This timer is reset when the panel is armed, or if Installer Programming is entered.*

NOTE:*When using the SIA FSK communication format with Activity Delinquency, the Closing Delinquency identifier is transmitted.*

Miscellaneous Maintenance Reporting Codes Section [351]
Delinquency Follows Zone Activity. . . . . [380]: [8]
Delinquency Transmission Cycle . . . . . [370]

5.9 Communicator – Reporting Formats

Each communication telephone number can be programmed to report using any one of eight formats available. Two 20 BPS pulse formats and two 10 BPS formats are supported, in addition to Contact ID, SIA, Pager and Residential Dial formats.

The **Communicator Call Direction** options can be used to disable the reporting of events such as Openings and Closings.

NOTE: *Do not program the 2nd telephone number to use Contact ID or SIA reporting code formats (section [360]) if Automatic reporting codes are selected for either Contact ID or SIA (section [381]).*

Communicator Format Options . . . . . Section [360]
Communicator Call Directions . . . . . .Section [361] to [368]

The following is a description of each reporting format:

Pulse Formats

Depending on which pulse format is selected, the panel will communicate using the following specifications:

- 3/1, 3/2, 4/1 or 4/2
- 1400 or 2300 Hz handshake
- 10 or 20 bits per second
- non-extended

With the **1600Hz Handshake** option enabled, the communicator will respond to 1600Hz handshakes when using the reporting Communication Formats 01 and 02 only. When the Standard Handshake option is enabled, the communicator will respond to the handshake specified by the BPS format (1400Hz or 2300Hz).

Additional Notes on Pulse Formats

1. The digit ‘0’ will send no pulses and is used as a filler digit.
2. When programming account numbers, enter four digits. When programming a three digit account number, the fourth digit must be programmed as ‘0’.
   3 digit account number [123] - program [1230]
3. If an account number has a ‘0’ in it, substitute a HEX digit ‘A’ for the ‘0’. For example:
   3 digit account number [502] - program [5A20]
   4 digit account number [4079] - program [4A79]
4. Reporting codes are two digits. When programming single-digit Reporting Codes, the second digit must be programmed as a ‘0’. If a ‘0’ is to be transmitted, substitute HEX digit ‘A’. For example:
   1 digit Reporting Code [3] - program [30]
   2 digit Reporting Code [30] - program [3A]
5. To prevent the panel from reporting an event, the reporting code should be programmed as [00] or [FF].

1600Hz/Standard Handshake . . . . . .Section [702]: [4]

Contact ID

Contact ID is a specialized format that will communicate information using tones rather than pulses. This format allows more information to be sent faster than other formats. For example, in addition to reporting an alarm in zone one, the Contact ID format will also report the type of alarm, such as an Entry/Exit alarm.

If the **Contact ID uses Programmed Reporting Codes** option is enabled, a two digit number from Appendix A must be entered in programming sections [320] to [353] for each event to be transmitted. The two digit number determines the type of alarm. The panel will automatically generate all other information, including the zone number.

If the **Contact ID uses Automatic Reporting Codes** option is enabled, the panel will operate as follows:

1. If an event’s reporting code is programmed as [00], the panel will not attempt to call the central station.
2. If the reporting code for an event is programmed as anything from [01] to [FF], the panel will automatically generate the zone or access code number. See Appendix A for a list of the codes which will be transmitted.

NOTE:*If the Automatic Contact ID option is selected, the panel will automatically generate all zone and access code numbers, eliminating the need to program these items.*

If the **Contact ID uses Programmed Reporting Codes** option is enabled, the panel will operate as follows:

1. If an event’s reporting code is programmed as [00] or [FF], the panel will not attempt to call central station.
2. If the reporting code for an event is programmed as anything from [01] to [FE], the panel will send the programmed reporting code.

Additional Notes on Contact ID

1. Account numbers must be four digits.
2. All reporting codes must be two digits.
3. Substitute the HEX digit ‘A’ for the ‘0’.

4. To prevent the panel from reporting an event, the reporting code should be programmed as [00].

Please refer to *Appendix A: "Reporting Codes"* for a list of Contact ID Identifiers.

Contact ID Uses Programmed/Automatic Codes . . [381]: [7]

SIA

SIA is a specialized format that will communicate information quickly using Frequency Shift Keying (FSK) rather than pulses. The SIA format will automatically generate the type of signal being transmitted, such as Burglary, Fire, Panic etc. The two digit reporting code is used to identify the zone or access code number.

NOTE: *If the Automatic SIA option is selected, the panel will automatically generate all zone and access code numbers, eliminating the need to program these items.*

If the **SIA Sends Automatic Reporting Codes** option is enabled, the panel will operate as follows:

1. If an event's reporting code is programmed as [00], the panel will not attempt to call the central station.
2. If the reporting code for an event is programmed as anything from [01] to [FF], the panel will automatically generate the zone or access code number.

If the **SIA Sends Programmed Reporting Codes** option is enabled, the panel will operate as follows:

1. If an event's reporting code is programmed as [00] or [FF], the panel will not attempt to call central station.
2. If the reporting code for an event is programmed as anything from [01] to [FE], the panel will send the programmed reporting code.

Please refer to *Appendix A: "Reporting Codes"* for a list of SIA identifiers.

SIA Sends Automatic Reporting Codes . . .Section [381]: [3]

Pager Format

The Communicator Format option for either telephone number can be programmed as Pager format. If an event occurs and the **Communicator Call Direction** options direct the call to a telephone number with the Pager Format selected, the panel will attempt to page.

When calling a pager, extra digits will be required in order for the format to function properly. The following is a list of Hex digits and the functions they perform:

Hex [B] - simulates the [*] key on a touch tone telephone

Hex [C] - simulates the [#] key on a touch tone telephone

Hex [D] - forces the panel to search for dial tone

Hex [E] - two second pause

Hex [F] - marks the end of the telephone number

The panel will attempt to call the pager once. Once the appropriate telephone number is dialed, the panel will send the account number and Reporting Code followed by the [#] key (Hex [C]).

The panel has no way of confirming if the pager was called successfully. A Failure To Communicate trouble will only be generated if the panel detects a busy tone on all dialing attempts, or if no dial tone is detected on all dialing attempts.

The pager format will not cause any form of ringback.

NOTE: *The Pager Format cannot be used with the LINKS1000 cellular communicator.*

NOTE: *Do not use the digit C in a reporting code when using Pager Format. In most cases, the digit C will be interpreted as a [#], which will terminate the page before it has finished.*

NOTE: *If the panel detects a busy signal, it will attempt to page again. It will make the maximum number of attempts programmed in section [160].*

NOTE: *Force dialing should be disabled when using Pager format.*

NOTE: *When using Pager format, you must program two hex digit E's at the end of the telephone number*

Residential Dial

If Residential Dial is programmed, and an event occurs that is programmed to communicate, the panel will seize the line and dial the appropriate telephone number(s). Once the dialing is complete, the panel will emit an ID tone and wait for a handshake (press a 1, 2, 4, 5, 7, 8, 0, ✶ or # key from any touch-tone telephone). It will wait for this handshake for the duration of **Post Dial Wait for Handshake** timer. Once the panel receives the handshake, it will emit an alarm tone over the telephone line for 20 seconds. If several alarms occur at the same time, only one call will be made to each telephone number the panel is programmed to call.

NOTE: *The keys 3, 6 and 9 are not valid handshakes.*

Post Dial Wait for Handshake Timer . . . . . Section [161]

5.10 Downloading

The required downloading software is DLS-1 v6.7 and up.

Downloading allows you to program the entire control panel via a computer, a modem and a telephone line. All functions, features, their changes and status – such as trouble conditions and open zones – can be viewed or programmed through downloading.

NOTE: *Downloading is always enabled for six hours each time the panel is powered up, unless the User Can Enable DLS Window option is disabled*

The panel will answer calls for downloading when the programmed **Number of Rings** is heard by the panel.

If the **Answering Machine/Double Call** option is enabled (or during the first six hours after power up), the panel will answer incoming calls for downloading in the following manner:

1. The panel hears one or two rings then misses a ring.
2. At this point the panel will start a the double-call timer.
3. If the panel hears another ring before the **Answering Machine Double-Call Timer** expires, it will answer on the first ring of the second call.

The panel will immediately go on line and begin downloading.

If the **Call-Back** option is enabled, the panel and the computer will both hang up. The panel will then call the **Downloading Computer's Telephone Number** and wait for the computer to answer. Once the computer answers, downloading will begin.

If the **User Enabled DLS Window** option is ON, the user can activate the downloading feature for a set period of time by entering [*][6][Master Code][5].

If the **Full 6-hour User Enabled DLS Window** option is enabled, when the user opens the DLS window with [*][6][Master code][5], the DLS window will remain open for six hours. The DLS window will remain open after a successful hang-up from a downloading call. If the **One Time 1-hour**

User Enabled DLS Window option is enabled, when the user opens the DLS window with [*][6][Master code][5], the DLS window will stay open for one hour, and will close after a successful hang-up from a downloading call.

After six hours, the panel will not answer incoming calls unless the **Answering Machine/Double Call** option is enabled, or the Number of Rings is programmed to be more than [0].

If the **User Initiated Call-Up** option is enabled, the user can have the panel initiate a call to the downloading computer by pressing [*][6][Master Code][6].

The **Download Access Code** and **Panel Identifier Code** are for security and proper identification. Both the panel and the computer file should contain the same information programmed before attempting to download.

The time to complete a successful download can be significantly reduced with the use of the PC-LINK. This adaptor makes it possible to perform on-site downloading. To **Initiate Local Downloading via the PC-LINK**, enter [*][8][Installer's Code][499][Installer's Code][499]. All keypads will be busy for the duration of the PC-LINK connection. The status LEDs will display the current system status on the keypad where the PC-LINK was initiated. For more information on connecting the PC-LINK, refer to your "PC-LINK Download Kit Instruction Sheet".

NOTE: *When a zone status upload is performed through PC-LINK, the information uploaded may not be accurate. For more information, refer to your DLS-1 manual.*

Downloading can also be performed through the LINKS1000 cellular communicator if the telephone line is disconnected. If using the LINKS1000 with call back, you need to program the **LINKS1000 Preamble** with the downloading telephone number in order for the panel to call the computer correctly.

NOTE:*When uploading labels from LCD keypads, only labels from the LCD keypad assigned to slot 8 will be uploaded.*

Answering Machine/Double Call	Section [401]: [1]
User Enable DLS Window	Section [401]: [2]
Call-Back	Section [401]: [3]
User-initiated Call-up enabled/disabled	Section [401]: [4]
One/Six Hour User-enabled DLS Window	Section [702]: [7]
Downloading Computer's Telephone Number	Section [402]
Downloading Access Code	Section [403]
Panel Identification Code	Section [404]
Answering Machine Double Call Timer	Section [405]
Number of Rings to Answer On	Section [406]
LINKS1000 Preamble (Downloading)	Section [490]
Initiate Local Downloading (PC-LINK)	Section [499]

5.11 PGM Output Options

Program the programmable outputs PGM1 and PGM2 on the main board by selecting one of the output options listed below (exceptions noted).

Main Board PGM Outputs	Section [009]

NOTE: *PGM outputs cannot be completely disabled in installer's programming. To disable a PGM output completely, you must remove all wiring from the output.*

[01] Burglary and Fire Bell Output

The output will activate when the alarm output is active and will deactivate when the alarm output is silenced. If the alarm output is pulsing, the PGM output will pulse as well. This output will follow the activation of the alarm output (pre-alert) for delayed fire zones.

[02] For future use

[03] Sensor Reset ([*][7][2])

NOTE:*This output will normally be active (switched to ground).*

This option is used to reset power for latching smoke detectors. The output will deactivate for five seconds when the [*][7][2] command is entered. (See *"[*][7] Command Output Functions"* on page 11.) The keypad buzzer will not sound for the five second period.

Please refer to the Control Panel Wiring Diagram in this manual for wiring instructions.

NOTE:*Only ONE of options [03] Sensor Reset and [20] [*][7][2] Command Output Option #2 may be programmed on the same system.*

[04] For future use

[05] Armed Status

When the system is armed, the PGM output will activate at the beginning of the exit delay. The output deactivates when the system is disarmed.

[06] Ready To Arm

The PGM will be active as long as the system is ready to arm and all non-force armable zones on the system are restored. Once an access code is entered to arm the system and the exit delay begins, the PGM output is deactivated.

[07] Keypad Buzzer Follower Mode

The PGM will activate when any of the following events occur and will remain active for as long as the keypad buzzer is active:

- Door Chime
- Entry Delay
- Auto-Arm Prealert
- Audible Exit Delay
- 24 Hour Supervisory Buzzer Zone

[08] Courtesy Pulse

Upon arming, the PGM output will activate for the duration of the exit delay plus an additional two minutes. Upon disarming, the PGM output will activate for the duration of the entry delay plus an additional two minutes.

[09] System Trouble Output

The PGM output will activate when any of the selected trouble conditions are present. It will deactivate when all the selected trouble conditions are cleared.

The PGM attributes for this option, programmed in Sections [141] to [142], differ from the standard selection of attributes. Program which trouble conditions will activate the output by selecting some or all of the following attributes:

Attribute

[1]**.....Service Required** (battery, bell, general trouble, general tamper, general supervisory)
[2]**.....AC Failure**
[3]**.....Telephone Line Trouble**
[4]**.....Failure to Communicate**
[5]**.....Fire Trouble / Zone Fault**
[6]**.....Zone Tamper**
[7]**.....Zone Low Battery**
[8]**.....Loss of Clock**

[10] System Event (Strobe Output)

The output activates when any of the selected system events (alarms) occur on the system.

NOTE:*This output will activate for silent and audible alarms or medical conditions only. It will not activate during pre-alert or delays.*

If attribute [8] is turned ON, the output will activate for the number of seconds programmed in the **PGM output timer** (section [164]).

If attribute [8] is turned OFF, in the armed state, the output will deactivate only once the system is disarmed. If an alarm activates this output in the disarmed state, the output will deactivate if a user enters a valid access code while the Bell Cut-off timer is counting down. The output will also deactivate if someone arms the system after the Bell Cut-off has expired.

This output can be used to indicate that an alarm has occurred before entering the premises.

The PGM attributes for this option, programmed in Sections [141] to [142], differ from the standard selection of attributes. Program which events will activate the output by selecting some or all of the following attributes:

Attribute

[1]..... **Burglary** (Delay, Instant, Interior, Stay/Away and 24 Hour Burglary Zones)

[2]..... **Fire** (Fire Keys, Fire Zones)

[3]..... **Panic** (Panic Keys and Panic Zones)

[4]..... **Medical** (Auxiliary Keys, Medical and Emergency Zones)

[5]..... **Supervisory** (Supervisory, Freezer and Water Zones)

[6]..... **Priority** (Gas, Heat, Sprinkler and 24 Hour Latching Zones)

[7]..... **Holdup** (Holdup zones)

[8]..... **Output Follows Timer** (output will activate for the number of seconds programmed in the **PGM Output Timer**) **/ Output Latched**

NOTE:*If attribute [8] is turned ON, attributes [1-7] must also be turned ON.*

PGM Output Timer. . . . . Section [164]

[11] System Tamper (All Sources)

The PGM output will activate when any tamper condition is present and will deactivate when all tampers are restored.

[12] TLM and Alarm

The PGM output activates when the system experiences both a telephone line trouble and an alarm. When the system is armed, the output will deactivate only if an access code is entered or if the telephone line is restored.

If an alarm activates this output in the disarmed state, the output will deactivate if a user enters a valid access code while the Bell Cut-off timer is counting down, or if the telephone line is restored. The output will also deactivate if someone arms the system after the Bell Cut-off has expired.

NOTE:*This output will activate for all silent and audible alarms except the Duress alarm.*

[13] Kissoff Output

The output will activate for two seconds after the control panel receives the kissoff transmission from the central station.

[14] Ground Start Pulse

The PGM Output will activate for two seconds to obtain a dial tone on Ground Start telephone equipment before the panel attempts to dial. Insert two 2-second pauses at the beginning of the telephone number when using this option.

[15] Remote Operation (DLS-1 Support)

This output can be activated and deactivated remotely using the DLS software.

[16] LINKS1000 Support (PGM1 Only)

The PGM output will be used as a data wire to communicate telephone number information for the LINKS1000 cellular unit.

[17] Away Armed Status

When the system is armed in the Away mode, the PGM output will activate at the beginning of the exit delay. The output deactivates when the panel is disarmed.

[18] Stay Armed Status

When the system is armed in the Stay mode, the PGM output will activate at the beginning of the exit delay. The output deactivates when the panel is disarmed.

[19] [*][7][1] Command Output Option #1

[20] [*][7][2] Command Output Option #2

These outputs are user-initiated by entering [*][7][1-2] at any keypad. When any output is activated, three acknowledgment beeps are sounded.

NOTES on Option [20] [*][7][2]:

Press [*][7][2][Access Code, if required] to activate any output programmed as one of PGM output option [03] or [20].

Traditionally, [*][7][2] has been reserved for resetting smoke detectors. Smoke detectors should now be programmed as output [03] “Sensor Reset”.

NOTE:*Only ONE of options [03] Sensor Reset and [20] [*][7][2] Command Output Option #2 may be programmed on the same system.*

[21]-[24] For future use

PGM Output Attributes

In addition to programming the output type, you must also program the PGM output attributes for each output.

PGM output options [09] “System Trouble” and [10] “System Event” have their own unique set of attributes listed below the description of each output type.

PGM output options [01], [03], [05]-[08], [11]-[20] have the following attributes:

Attribute ....ON OFF

[1] .....PGM Enable PGM Disable

[3] .....True Output Inverted Output

Attribute ON: the output energizes when activated
Attribute OFF: the output de-energizes when activated

[4] .....Output Pulsed Output ON/OFF

Attribute ON: the output will activate once for the amount of time programmed in section [164] when initiated by the user
Attribute OFF: the output will toggle ON or OFF when initiated by the user.
(Only applicable to options [19]-[20].)

[5] .....Access Code Req. No code Req.

Attribute ON: the output requires a code for activation.
Attribute OFF: no code required.
(only applicable to keypad-activated outputs)

PGM attributes return to their default settings when you change PGM output options. Please see the programming worksheets for a list of the default settings for each PGM output type.

Be careful when selecting the normal and active states of each PGM output to ensure that an undesirable output state does not occur after a loss and restore of AC power.

NOTE: *Attribute [3] must be ON (default) for PGM output option [16].*

NOTE: *If you program more than one PGM output as the same output type (e.g. if PGM1 and PGM2 are both programmed as [19] Command Output 1), the settings for output attributes [1], [2] and [5] must be the same. This does not apply to outputs programmed as types [09] and [10].*

PGM Output Attributes . . . . . Section [141]-[142]

5.12 Telephone Line Monitor (TLM)

When the **TLM Enable** option is selected, the panel will supervise the telephone line and will indicate a trouble condition if the telephone line is disconnected.

If the TLM Enable option is ON, the panel will check the telephone line every 10 seconds. If the telephone line voltage is below 3V for the number of checks programmed in the **TLM Trouble Delay** section, the panel will report a TLM trouble. The default number of checks is 3. Enter a number from [003] to [255] in the TLM Trouble Delay section to change the number of checks before the TLM trouble is reported. Programming a delay means that a momentary interruption of the telephone line will not cause a trouble condition.

If the **TLM Trouble Beeps When Armed** option is enabled, the panel will indicate a TLM trouble at the keypad while the system is armed. To activate the bell output in the case of a TLM trouble while the system is armed, the **TLM Audible (Bell) When Armed** option must be selected.

When the trouble condition is restored, the panel can send a **TLM Restoral** reporting code. Any events which occur while the telephone line is down will also be communicated.

If the LINKS1000 Cellular Communicator, or LINKS2X50 is being used, the panel can be programmed to report a **TLM Trouble** Reporting Code.

TLM Enable/Disable . . . . . Section [015]: [7]
TLM Trouble Beeps When Armed or
TLM Audible (Bell) When Armed . . . . . Section [015]: [8]
TLM Trouble Reporting Code . . . . . Section [349]
TLM Restoral Reporting Code . . . . . Section [350]
TLM Trouble Delay . . . . . Section [370]

5.13 Bell

The bell will silence after the number of minutes programmed for the **Bell Cut-off** time have passed.

The panel supervises the Bell output. If an open condition is detected, the panel will immediately indicate a trouble condition by beeping the keypad twice every 10 seconds to alert the owner of the problem. The panel can send a **Bell Circuit Trouble** and **Trouble Restoral** reporting codes to indicate the situation (See 5.8 *"Communicator – Reporting Codes"* on page 18.)

If the **Temporal Three Fire Signal** option is enabled, all Fire signals (on zone types [07], [08], [87], [88]) will follow the Temporal Three Pattern as described in NFPA 72. If turned OFF all Fire signals will sound a one second on, one second off cadence.

If **Fire Bell Continuous** is enabled, the alarm output will sound until a code is entered. If disabled, the alarm will sound until a code is entered or the bell cut-off time has expired.

Bell Cut-off . . . . . Section [005]
Bell Circuit Trouble Reporting Code . . . . . Section [349]
Bell Circuit Trouble Restoral Reporting Code . . Section [350]
Temporal Three Fire Signal Enable/Disable.Section [013]: [8]
Fire Bell Continuous. . . . . .Section [014]: [8]

5.14 Test Transmission

To ensure that the communication link with the central station is functioning properly, program the panel to send a test transmission signal on a regular basis.

The panel can send a **Periodic Test Transmission** Reporting Code at the programmed **Test Transmission Time of Day**. The **Test Transmission Cycle** determines the period of time between tests. The option **Land Line Test Transmission in Minutes/Days** allows you to select whether the Land Line Test Transmission cycle will be counted in minutes or days. If you have selected the test transmission cycle to be in minutes, the Test Transmission Time of Day counter will not apply.

NOTE:*If you have selected the Land Line Test Transmission in Minutes option, do not program the test transmission cycle to be less than 10 minutes.*

NOTE:*The LINKS Test Transmission can only be programmed in days.*

If you program the test transmission cycle for a longer period of time than it was programmed for previously, the system will wait the original time period before the next test transmission is sent, and then begin reporting with the new interval.

The panel can also send a test for the LINKS1000 Cellular Communicator, if used. If the **LINKS1000 Test Transmission Code** is programmed, the panel will send a cellular test at the interval programmed in the **LINKS Test Transmission Cycle**.

Users can also generate a communicator test. If the **System Test Reporting Code** is programmed, the panel will send the signal when the System Test keypad command is entered. (See *"[*][6] User Functions"* on page 10.)

Test Transmission Reporting Codes . . . . . Section [352]
Test Transmission Time of Day . . . . . Section [371]
Test Transmission Cycles. . . . . Section [370]
Land Line Test Transmission M/D . . . . . .Section [702]: [3]

5.15 Transmission Delay

If the transmission delay zone attribute is selected for a given zone, the panel will delay reporting an alarm for that zone for the number of seconds programmed for the **Transmission Delay Time**. If the panel is disarmed before the delay time expires, the panel will not report the event.

Transmission Delay Time . . . . . Section [370]

5.16 Fire, Auxiliary and Panic Keys

The emergency keys are available on all keypads. These keys must be pressed and held for two seconds before they will activate. This two second delay is designed to help prevent accidental activation.

If the **[F] / 🔥 Key** option is enabled, when the Fire keys are pressed and held for two seconds, the panel will activate the alarm output following the option programmed in section

[013]: [8] (see section 5.13 *"Bell"* on page 23). The alarm output will sound until a code is entered or until the bell cut-off time expires. Communication of the signal to central station is immediate.

If the [A] / ⚠ Key is pressed and held for two seconds, the panel will sound the keypad beeps three times to verify activation. The panel will beep the keypad ten times rapidly when a kissoff is received, to verify communication to the central station.

If the [P] / ☗ Key is pressed and held for two seconds, the panel will immediately communicate the signal to central station.

If **[P] Key Audible Bell and Buzzer** option is enabled, when a user presses the [P] / ☗ key, the keypad will beep three times and the panel will activate the alarm output until an access code is entered or the bell cut-off expires. If the option is disabled, the Panic alarm will be completely silent.

Each LCD keypad may be programmed to have the [F], [A], & [P] keys enabled or disabled. Please refer to Appendix B: *"Programming LCD Keypads"* on page 45.

NOTE:*The Fire, Auxiliary, Panic keys will operate even if Keypad Blanking is active (See 5.22 "Keypad Blanking" on page 25.)*

[F] Key Enable . . . . . Section [015]: [1]
[P] Key Audible Bell and Buzzer . . . . . Section [015]: [2]

5.17 Arming/Disarming Options

If the **Quick Arm** option is enabled, the panel can be armed without an access code by entering [*][0] or by pressing the Stay or Away function key. If the Quick Arm option is disabled, users will need to enter an access code after pressing a function key.

The **Quick Exit** option, if enabled, will allow someone to leave an armed premises through a Delay type zone without having to disarm and re-arm the system. See *"[*][0] Quick Exit"* on page 11.

Enable the **Arm/Disarm Bell Squawk** option to have the panel squawk the alarm output once upon arming and twice upon disarming. If an alarm is in memory, when the panel is disarmed the bell will sound three pairs of disarm squawks.

NOTE: *If you enable the Bell Squawk on Arming/Disarming (section [014], option [1]), the bell will sound arm/disarm bell squawks for all access codes, regardless of the programming for attribute [7]. See "[*][5] Programming Access Codes" on page 10.*

Enable both the **Squawk on Away Arming/Disarming Only** and the **Arm/Disarm Bell Squawk** options to have the panel squawk the bell only when the system is away armed or disarmed.

The **Opening After Alarm Keypad Ringback** option will cause the keypad to beep 8 times rapidly after the Opening After Alarm reporting code has been successfully transmitted to the central station. The **Opening After Alarm Bell Ringback** option will cause the panel to squawk the bell 8 times rapidly after the Opening After Alarm reporting code has been successfully transmitted to the central station.

NOTE:*If the panel is armed using the Stay function key, or by entering [*][9][access code], there will be no bell squawks during entry and exit delays, except for the arm/disarm bell squawks.*

Closing Confirmation, if enabled, will cause the keypad to beep 8 times rapidly after the closing reporting code has been successfully transmitted to central station.

If the **Bypass Status Displayed While Armed** option is chosen, the Bypass light will be ON while the system is armed to indicate that there are bypassed zones.

If the **AC/DC Inhibit Arming** option is enabled, the panel will not arm if there is an AC or DC (battery) trouble present on the system. Arming will not be allowed until the AC or battery trouble is cleared. If no AC or battery trouble is currently present, when a user attempts to arm the system, the panel will do an automatic battery test of the main panel and modules that support a backup battery. If the battery is good, the system will arm. If the battery is bad, the system will not arm.

If the AC/DC Inhibit Arming option is disabled, the panel will not do an automatic battery test when arming is attempted and the user will not be prevented from arming the system when there is an AC or battery trouble.

If you enable the **WLS Key Does Not Use Access Codes** option, the disarm button *will* work on wireless keys which have not been assigned access codes. Wireless keys can only be assigned access codes when used with PC5132 v3.0 or higher.

To prevent disarming by wireless keys which don't have access codes, *disable* this option. (Please see your PC5132 manual for more information on programming wireless keys.)

NOTE: *This option must be enabled when using a PC5132 v2.1 or earlier.*

Quick Arm Enable . . . . . Section [015]: [4]
Quick Exit Enable . . . . . Section [015]: [3]
Arm/Disarm Bell Squawk . . . . . Section [014]: [1]
Squawk on Away Arm/Disarm Only . . . . . Section [017]: [8]
Closing Confirmation . . . . . Section [381]: [4]
Opening After Alarm Keypad Ringback . . . Section [381]: [1]
Opening After Alarm Bell Ringback . . . . . Section [381]: [2]
Bypass Status Displayed While Armed . . . Section [016]: [7]
AC/DC Inhibit Arming . . . . . Section [701]: [3]
Unident. Wkey Disarm Enabled . . . . . Section [017]: [1]

5.18 Entry/Exit Delay Options

Two different **Entry Delays** can be programmed: the first entry delay will be enabled for Delay 1 type zones and the second for Delay 2 type zones. Only one **Exit Delay** can be programmed.

NOTE:*When the panel is armed, the entry delay will follow the entry delay time programmed for the delay zone which is violated first.*

Users can restart the exit delay by pressing the Away key while it is counting down. The system will not log the user who re-started the exit delay, unless the **Quick Arming Disabled/ Function Keys Require Code** option is turned on (section [015], option [4]).

NOTE: *If the system has been Stay armed or armed with no entry delay ([*][9]) pressing the Away key will not start an exit delay.*

Upon arming, the panel will begin the exit delay. If the **Audible Exit Delay with Urgency** option is enabled, the keypad will beep at one second intervals until the exit delay expires. The keypad will beep rapidly for the last 10 seconds of exit delay to warn the user that the system is about to arm. If this option is disabled, the keypad will not beep during the exit delay.

The **Audible Exit Fault**, as explained in Section 3.1, will notify the user if they failed to secure the premises upon arming. This option can be enabled or disabled according to the user's needs.

For commercial applications, the **Bell Squawk on Exit Delay** option may be enabled. The panel will squawk the alarm output once every second when the exit delay is initiated and three times per second for the last 10 seconds until the exit delay expires.

Upon entry, if a Delay type zone is violated, the panel will begin the entry delay. The keypad will emit a steady tone. The keypad will pulse the keypad sounder during the last 10 seconds to warn the user the system is about to go into alarm. If there was an alarm during the armed period, the keypad will pulse for the entire entry delay to warn the user of the previous alarm.

For commercial applications **Bell Squawk on Entry Delay** may be enabled. The panel will squawk the alarm output once every second until the entry delay expires or the system is disarmed.

If the **Bell Squawk During Auto Arm** option is enabled, the bell will squawk once every 10 seconds for one minute during the Auto-arm pre-alert. This will notify anyone on the premises that the system is being armed.

If the **Exit Delay Termination** option is enabled, the panel will monitor the Delay 1 zones during exit delay. During the exit delay, if a Delay 1 type zone is violated and then secured, the exit delay will be terminated and the panel will be armed immediately.

Entry Delay 1 and 2 (System Times) . . . . . Section [005]
Exit Delay (System Times) . . . . . Section [005]
Audible Exit Delay with Urgency . . . . . Section [014]: [6]
Audible Exit Fault Enabled/ Disabled. . . . . Section [013]: [6]
Bell Squawk Options . . . . . Section [014]: [2] - [4]
Exit Delay Termination . . . . . Section [014]: [7]

5.19 Swinger Shutdown

The swinger shutdown feature is designed to prevent a "runaway" communicator from tying up the central station. After the panel has communicated the programmed number of transmissions for an event, it will no longer report that event until the swinger shutdown is reset. Different swinger shutdown levels can be set for zone alarms, zone tampers and maintenance signals.

By default, each **Swinger Shutdown** limit is set to [003]. The panel will not send more than three signals for each zone until the swinger shutdown is reset.

The Bell output will not be activated for alarms on zones that have exceeded the limit of alarms set in the Swinger Shutdown counter.

Swinger shutdown will be reset every day at midnight or when the panel is armed. Once reset, the panel will again communicate normally.

Swinger Shutdown . . . . . Section[370]

5.20 Event Buffer

The panel will store the last 128 events which occurred on the system. The **Event Buffer** will contain the name, time and date of each event, along with the zone number, access code number or any other information pertaining to the event.

If the **Event Buffer Follows Swinger Shutdown** option is enabled, the event buffer will not store events after the Swinger Shutdown level has been reached. This will prevent the panel from overwriting the entire buffer if a problem exists.

The event buffer can be viewed in three different ways: from an LCD keypad (see *"[*][6] User Functions"* on page 10) printed on-site using the PC5400 printer module, or it can be uploaded using DLS software.

Event Buffer Follows
Swinger Shutdown. . . . . .Section [013]: [7]

5.21 Keypad Lockout Options

The panel can be programmed to "lock out" keypads if a series of incorrect access codes are entered. Once the **Number of Invalid Codes Before Lockout** limit has been reached, the panel will lock out all keypads for the Lockout Duration and log the event to the event buffer. For the duration of the lockout, the panel will sound an error tone when any key is pressed.

***NOTE:** The Invalid Code Counter will be reset every hour.*

To disable the keypad lockout option, program the Number of Invalid Codes Before Lockout as [000].

***NOTE:** If Keypad Lockout is active, the panel CANNOT be armed / disarmed with a keyswitch.*

Keypad Lockout Options. . . . . .Section [012]

5.22 Keypad Blanking

If the **Blank Keypad When Not in Use** option is enabled, the panel will turn off all lights and LCDs on the keypads when no keys are pressed for 30 seconds. The keys, however, will remain backlit.

The panel will turn the lights and LCDs back on if entry delay begins or an audible alarm occurs. The lights and LCDs will also come on if a key is pressed or, if a valid access code is entered when the **Code Required to Restore Blanking** option is enabled.

***NOTE:**If using a PC5132 v3.0 or greater, and wireless keys, do not enable the Code Required to Restore Blanking option, as the keys will not function correctly.*

If the **Power Save Mode** option is enabled the panel will blank all keypad lights including backlighting when AC power fails, in order to conserve the back up battery.

Blank Keypad when not in use . . . . . Section [016]: [3]
Code Required to Restore Blanking . . . . . Section [016]: [4]
Power Save Mode . . . . . Section [016]: [6]

5.23 Keypad Backlighting

The keys of all the keypads can be backlit to provide easy viewing in dim lighting conditions. If the **Keypad Backlighting** option is enabled the keys will be illuminated.

Keypad Backlighting Option . . . . . .Section [016]: [5]

5.24 Loop Response

The normal loop response time for all zones is 500 milliseconds. The panel will not consider a zone violated unless it is violated for at least 500 milliseconds.

Zones 1-4 on the control board, however, can be programmed for a fast loop response (under 40ms).

Zones 1-4 are Fast Loop Response . . . . Section [030]: [1-4]

5.25 Keypad Tampers

If the **Keypad Tampers Enable** option is selected, the panel will display and transmit a **General System Tamper** reporting code if any keypad is removed from the wall. When the keypad tamper is restored, the panel will transmit the **General System Tamper Restoral** reporting code. All keypads should be properly installed and secured before enabling this option.

If the **All System Tampers Require Installer Reset** option is enabled, any system tampers and zone faults must be reset by entering [*][8][Installer's Code] before the system can be armed. Auto-Arming and Keyswitch arming will also be prevented in the presence of any system tamper or zone fault.

***NOTE:** The auto arm cancellation code is not transmitted when a reset is required because a user has not cancelled the auto-arming sequence.*

Keypad Tamper Enable . . . . . Section [016]: [8]
General System Tamper and Tamper
Restoral Reporting Codes . . . . . Section [338]
System Tampers Req. Installer Reset . . . . . Section [701]: [4]

***NOTE:** After enabling keypad tampers, it is recommended to tamper and restore all keypads to ensure proper functioning.*

5.26 LINKS1000 Cellular Communicator

The LINKS1000 Cellular Communicator can be used three different ways:

- as the sole communicator for the panel
- as a backup for either or both telephone numbers
- as a redundant backup to the land line communicator, where the panel will call using the land line and the LINKS.

A LINKS Preamble is programmable for each telephone number in the event that the land line number is local but the LINKS is required to dial an exchange. When programming a LINKS Preamble, all unused digits must be programmed with a hexadecimal "F".

***NOTE:** You may need to program an additional Delay Between Dialing Attempts in order to ensure proper LINKS1000 operation.*

***NOTE:** If a LINKS1000 is connected to the system, make sure the Maximum Number of Dialing Attempts is programmed to be 008 or greater (section [160].*

Using LINKS1000 as the Sole Communicator

The panel can be programmed to report an event only using the LINKS1000 cellular communicator. To program this option, select only the LINKS1000 in the Communicator Call Direction Options. The Call LINKS as well as Land Line option must also be enabled.

When the selected event occurs the panel will only attempt to call central station using the LINKS.

Using the LINKS1000 as a Backup Communicator

The panel can be programmed to call using the LINKS1000 Cellular Communicator if the panel is having difficulty communicating an event using the land line. To program this option, select both the telephone number and LINKS options in the Communicator Call Direction Options. The **LINKS is Backup of Land Lines** option must be selected.

When used as a backup communicator, the panel will attempt to call the central station in the following manner:

the panel will try to call using land lines – if unsuccessful, the panel will try to call using the LINKS

if unsuccessful, the panel will try to call using the land lines on the next dialing attempt

This process will continue until the panel has successfully communicated with the central station or until the panel's programmed number of dialing attempts have been exhausted.

Using the LINKS as a Redundant Communicator

The panel can be programmed to call using first the LINKS1000 and then the land line when an event occurs. To program this option, select both the telephone number and the LINKS options for the Communicator Call Direction Options for the event. The **Call LINKS as well as Land Line** option must be selected.

LINKS Special Preamble

In some areas of North America, dialing #DAT or *DATA reduces the cellular billing increment. The **LINKS Special Preamble** (section [393]), allows the use of [*] and [#] characters for the programming of #DAT and *DATA.

The LINKS Special Preamble is sent BEFORE the Preamble programmed in Sections [390] to [392].

Example: [Special Preamble][Regular Preamble][Telephone Number]

***NOTE:** If this Special Preamble is programmed, it will be inserted before the Regular Preamble of ALL telephone numbers. Hex digits D and E are not supported for Preamble programming.*

***NOTE:** If Busy Tone Detection is enabled, the LINKS1000 must be tested to ensure full operation.*

Please refer to the LINKS1000 installation Manual for more information and connection diagrams.

LINKS Preamble (First Telephone Number) . . . Section [390]
LINKS Preamble (Second Telephone Number) Section [391]
LINKS Preamble (Third Telephone Number) . . Section [392]
LINKS Preamble
(Downloading Telephone Number) . . . . . Section [490]
Communicator Call Direction Options . . Section [361]-[368]
Call LINKS as well as Land Line . . . . . Section [380]: [7]
LINKS Special Preamble. . . . . Section [393]

5.27 Additional System Modules

The following modules are programmed through the module programming sections [801]-[804]: the PC5400 Printer module, the Links2X50 Long-Range Radio module, and the PC5132 Wireless Receiver and all of its devices. For instructions on the installation and programming of these additional modules and devices, please see their respective installation and programming manuals.

PC5400 Printer Module Programming . . . . . Section [801]
Alternative Comm. (LINKS2X50)
Programming . . . . . Section [803]
PC5132 Programming. . . . . Section [804]

5.28 Clock Adjust

In order to compensate for timing inaccuracies, the panel may be programmed to add or subtract seconds during the last minute of each day using the Clock Adjust programming section. Valid entries are 01 - 99. The default setting is 60 seconds. To determine the value to be programmed in this section, monitor the amount of time lost or gained by the panel over a period of time. Then, calculate the average amount of time per day that the panel gains or loses. If the clock's timing is off, it may be corrected with this setting.

Example #1: The clock loses an average of 9 seconds per day.

Solution: Program the panel to adjust the clock by 51 seconds (instead of the default 60 seconds) for the last minute of each day in section [700]. This will speed up the panel's clock by 9 seconds, correcting the problem.

Example #2: The clock gains an average of 11 seconds per day.

Solution: Program the panel to adjust the clock by 71 seconds (instead of the default 60 seconds) for the last minute of each day in section [700]. This will slow down the panel's clock by 11 seconds, correcting the problem.

NOTE:*If the Auto-arm time is set for 23:59, any change to the Clock Adjust option will directly affect the Auto-arm pre-alert time.*

Clock Adjust . . . . . Section [700]

5.29 Timebase

In cases of unstable AC power input you can use the internal crystal to keep a more accurate timebase by enabling the **Timebase is Internal Crystal** option.

If the 50 or 60Hz AC power input is very stable it can be used as the timebase, by enabling the **Timebase is AC line** option.

Timebase Internal Crystal/AC line . . . . . Section [701]: [2]

5.30 Resetting Factory Defaults

On occasion, it may be necessary to default the main control panel or one of the connected modules: the LINKS2X50 Radio interface, the PC5132 wireless receiver, and the PC5400 Printer module.

To default the main control panel (hardware), perform the following:

1. Remove AC and battery from the panel.
2. Remove all wires from the Zone 1 and PGM1 terminals.
3. With a piece of wire short the Zone 1 terminal to the PGM1 terminal.
4. Apply AC power to the main panel.
5. When Zone Light 1 is lit on the keypad the default is complete.
6. Remove AC power from the control
7. Reconnect all original wiring and power up the control.

NOTE: *AC power must be used to power the panel. The panel will not default if only the battery is used.*

To default the main control panel software and other modules, perform the following:

1. Enter the Installer's Programming mode.
2. Enter the appropriate programming section [XXX].
3. Enter the Installer's Code.
4. Re-enter the appropriate programming section [XXX].

The panel will take a few seconds to perform the default. When the keypad is again operational the default is complete.

NOTE:*If using Identified Wireless Keys (PC5132 v3.0 or later only), when the main panel is defaulted, all wireless key access codes must be re-programmed. Refer to your PC5132 v3.0 Installation Manual for more information.*

Restore Alternative Communicator
(LINKS2X50)
to Default Programming. . . . . Section [993]
Restore PC5132 to Default Programming . . . . Section [996]
Restore PC5400 Printer to Default ProgrammingSection [997]
Restore Panel to Default Programming . . . . . Section [999]

5.31 Installer's Lockout

If **Installer's Lockout** is selected, a hardware default cannot be performed. If a software default is performed, all programming will restore to factory default.

If **Installer's Lockout Disable** is selected, the panel will restore all programming to factory defaults when a hardware or software default is performed on the main control panel.

To enable or disable Installer's Lockout, perform the following:

1. Enter the Installer's Programming mode.
2. Enter the appropriate programming section: [990] or [991].
3. Enter the Installer's Code.
4. Re-enter the appropriate programming section: [990] or [991].

Installer Lockout Enable . . . . . Section [990]
Installer Lockout Disable . . . . . Section [991]

5.32 Walk Test (Installer)

The **Installer Walk Test** can be used to test the alarm state of each zone of the panel. The walk test cannot be used to test zone type [24].

Before beginning the walk test, ensure the following conditions are met:

1. The panel is disarmed
2. The **Keypad Blanking** option is disabled (section [016]: [3])
3. The **Fire Bell is Continuous** option is disabled (section [014]: [8])
4. The **Transmission Delay** is disabled, if Transmission Delay is not required (section [370])

NOTE: *Fire Troubles are not supported in Walk Test.*

To perform a walk test:

Step 1 - Enter Installer Programming

Step 2 - Enter Section [901]

When any zone is violated the panel will activate the Bell Output for two seconds, log the event to the event buffer and communicate the alarm to central station.

Test each zone several times. Check the event buffer to ensure that all zones and FAP keys are functioning properly.

NOTE: *Zones with the Force Arm attribute enabled, will not cause the Ready light to go out when they are violated.*

To stop the test:

Step 1 - Enter Installer Programming

Step 2 - Enter section [901]

NOTE:*The alarm memory is cleared upon entering Walk Test mode. When the walk test is complete, the Alarm Memory light will remain lit, but there will be no alarms in memory. The light will turn off the next time the panel is armed.*

Installer Walk Test Enable/Disable. . . . . Section [901]

Section 6: Programming Worksheets

For the Record

Customer: _____

Address: _____

Telephone: _____ Installation Date: _____

Installer's Code: _____

Module Name	Description	Location
PC585	Main Panel	
PC5132	Wireless Receiver	
PC5400	Serial Printer Module	
LINKS1000	Cellular Communicator	
LINKS2X50	Long Range Radio	

Keypads	Keypad Type	Location
Keypad 1		
Keypad 2		
Keypad 3		
Keypad 4		
Keypad 5		
Keypad 6		
Keypad 7		
Keypad 8		

Zone Programming Summary

Zone programming can be found in sections [001] - [004], [101] - [132], [020] and [202] - [205]. Use this area to record a summary of your zone programming. Refer to Appendix B: *"Programming LCD Keypads"* on page 45, for instructions on programming zone labels.

System Zone	Zone Label	Zone Type	Zone Attributes* 1	2	3	4	5	6	7	8	Serial Number (Wireless)
Zone 1											
Zone 2											
Zone 3											
Zone 4											
Zone 5											
Zone 6											
Zone 7											
Zone 8											
Zone 9											
Zone 10											
Zone 11											
Zone 12											
Zone 13											
Zone 14											
Zone 15											
Zone 16											
Zone 17											
Zone 18											
Zone 19											
Zone 20											
Zone 21											
Zone 22											
Zone 23											
Zone 24											
Zone 25											
Zone 26											
Zone 27											
Zone 28											
Zone 29											
Zone 30											
Zone 31											
Zone 32											

***Zone Attributes:**

Option 1: Audible/Silent
Option 2: Steady/Pulsed
Option 3: Chime
Option 4: Bypass
Option 5: Force
Option 6: Swinger Shutdown
Option 7: Transmission Delay
Option 8: Wireless

Keypad Programming

[000] Keypad Enrollment (Section 2.5 “Keypad Assignment” on page 4)

NOTE: *This must be done at each keypad requiring programming.*

[0] Slot [Valid entries are 11-18; i.e. enter [11] for slot 1, [12] for slot 2, etc.]
[1] Function Key 1 Assignment (Valid entries are 00-17)
[2] Function Key 2 Assignment (Valid entries are 00-17)
[3] Function Key 3 Assignment (Valid entries are 00-17)
[4] Function Key 4 Assignment (Valid entries are 00-17)
[5] Function Key 5 Assignment (Valid entries are 00-17)

Function Key Options:

00 Null Key
01 For future use
02 For future use
03 Stay Arm
04 Away Arm
05 [*][9] No-Entry Arm
06 [*][4] Chime On / Off
07 [*][6][——][4] System Test
08 [*][1] Bypass Mode
09 [*][2] Trouble Display
10 [*][3] Alarm Memory
11 [*][5] User Programming
12 [*][6] User Functions
13 Command Output #1 [*][7][1]
14 Command Output #2 [*][7][2]
15 For future use
16 [*][0] Quick Exit
17 [*][1] Reactivate Stay/Away’s
18 For future use
19 For future use
20 For future use
21 For future use

	Slot	Function Key 1	Function Key 2	Function Key 3	Function Key 4	Function Key 5
LED Defaults	11	03	04	06	14	16
LCD Defaults	18	03	04	06	14	16
KEYPAD 1						
KEYPAD 2						
KEYPAD 3						
KEYPAD 4						
KEYPAD 5						
KEYPAD 6						
KEYPAD 7						
KEYPAD 8						

Basic Programming

Zone Definitions

00 Null Zone (Not Used)
01 Delay 1
02 Delay 2
03 Instant
04 Interior
05 Interior, Stay/Away
06 Delay, Stay/Away
07 Delayed 24 Hour Fire (Hardwired)
08 Standard 24 Hour Fire (Hardwired)
09 24 Hour Supervisory
10 24 Hour Supervisory Buzzer
11 24 Hour Burglary
12 24 Hour Holdup
13 24 Hour Gas
14 24 Hour Heating
15 24 Hour Medical
16 24 Hour Panic
17 24 Hour Emergency
18 24 Hour Sprinkler
19 24 Hour Water
20 24 Hour Freeze
21 24 Hour Latching Tamper
22 Momentary Keyswitch Arm
23 Maintained Keyswitch Arm
24 LINKS Answer
25 Interior Delay
87 Delay 24 Hour Fire (Wireless)
88 Standard 24 Hour Fire (Wireless)

NOTE:*Keypads must be installed to use 24-hour Buzzer zones.*

NOTE:*Keypad zones are assigned in section [020]. Zone Attributes are assigned in sections [101] - [132]. Zone assignment is in sections [202] - [205].*

[001] Zone 1-8 Definitions (Section 5.2 “Zone Programming” on page 15)

Default			Default		
01		Zone 1	00		Zone 5
03		Zone 2	00		Zone 6
04		Zone 3	00		Zone 7
04		Zone 4	00		Zone 8

NOTE:*Zones 9-32 are only available for wireless zones.*

[002] Zone 9-16 Definitions (Section 5.2 “Zone Programming” on page 15)

Default			Default		
00	|__|__|	Zone 9	00	|__|__|	Zone 13
00	|__|__|	Zone 10	00	|__|__|	Zone 14
00	|__|__|	Zone 11	00	|__|__|	Zone 15
00	|__|__|	Zone 12	00	|__|__|	Zone 16

[003] Zone 17-24 Definitions (Section 5.2 “Zone Programming” on page 15)

Default			Default		
00	|__|__|	Zone 17	00	|__|__|	Zone 21
00	|__|__|	Zone 18	00	|__|__|	Zone 22
00	|__|__|	Zone 19	00	|__|__|	Zone 23
00	|__|__|	Zone 20	00	|__|__|	Zone 24

[004] Zone 25-32 Definitions (Section 5.2 “Zone Programming” on page 15)

Default			Default		
00	|__|__|	Zone 25	00	|__|__|	Zone 29
00	|__|__|	Zone 26	00	|__|__|	Zone 30
00	|__|__|	Zone 27	00	|__|__|	Zone 31
00	|__|__|	Zone28	00	|__|__|	Zone 32

[005] System Times

Default	Valid entries: [001-255]	
030	|__|__|__|	Entry Delay 1 (in seconds)(Section 5.18 “Entry/Exit Delay Options” on page 24)
045	|__|__|__|	Entry Delay 2 (in seconds)(Section 5.18 “Entry/Exit Delay Options” on page 24)
120	|__|__|__|	Exit Delay (in seconds)(Section 5.18 “Entry/Exit Delay Options” on page 24)
004	|__|__|__|	Bell Cut-off (in minutes)(Section 5.13 “Bell” on page 23)

[006] Installer’s Code (Section 4.1 “Installer’s Programming” on page 13)

Default
5555 \|__\|__\|__\|__\|

[007] Master Code (Section 5.1 “Programming Security Codes” on page 15)

Default
1234 \|__\|__\|__\|__\|

[008] Maintenance Code (Section 5.1 “Programming Security Codes” on page 15)

Default
AAAA \|__\|__\|__\|__\|

[009] PGM Output Programming (PGM 1 and 2) (Section 5.11 “PGM Output Options” on page 21)

Programmable Output Options

01 Burglary and Fire Bell Output
02 For future use
03 Sensor Reset
04 For future use
05 System Armed Status
06 Ready To Arm
07 Keypad Buzzer Follow Mode
08 Courtesy Pulse
09 System Trouble Output (with Trouble options)
10 System Event [Strobe (with Event options)]
11 System Tamper (all sources: zones, kpd, modules)
12 TLM and Alarm
13 Kissoff Output
14 Ground Start Pulse
15 Remote Operation (DLS-1 Support)
16 LINKS1000 Support (PGM1 only)
17 Away Armed Status
18 Stay Armed Status
19 Command Output #1 ([*][7][1])
20 Command Output #2 ([*][7][2])
21 For future use
22 For future use
23 For future use
24 For future use

NOTE:*Output types [03] and [20] cannot be used together on the same system.*

Default			Default			
19	|__|__|	PGM 1	10	|__|__|	PGM 2	***Program PGM Option Attributes in sections [141] & [142].***

[012] Keypad Lockout Options (Section 5.21 "Keypad Lockout Options" on page 25)

NOTE:*If Keypad Lockout is active, the panel cannot be disarmed with a keyswitch.*

Default		
000	___ ___ ___	Number of Invalid Codes Before Lockout (001-255 codes)
000	___ ___ ___	Lockout Duration (001-255 minutes)

[013] First System Option Code

Default		Option	ON	Off	Section	Page #
OFF	___	1	Normally Closed Loops	End-of-Line Resistors	2.8	5
OFF	___	2	Double End-of-Line Resistors	Single End-of-Line Resistors	2.8	5
ON*	___	3	Panel shows all troubles when armed	Panel shows only Fire troubles when armed	3.4	8
OFF	___	4	Tampers/Faults do not show as open	Tampers/Faults show as open	3.4	8
OFF	___	5	For future use			
ON	___	6	Audible Exit Fault Enabled	Audible Exit Fault Disabled	5.18	24
ON	___	7	Event Buffer Follows Swinger Shutdown	Event Buffer Logs Events Past shutdown	5.20	25
OFF	___	8	Temporal Three Fire Signal Enabled	Standard Pulsed Fire Signal	5.13	23

* Option 3 must be OFF if LCD keypads older than v2.0 are used.

[014] Second System Option Code

Default		Option	ON	Off	Section	Page #
OFF	___	1	Arm / Disarm Bell Squawk enabled	Arm / Disarm Bell Squawk disabled	5.17	24
OFF	___	2	Bell Squawk During Auto Arm	No Bell Squawk During Auto Arm	5.18	24
OFF	___	3	Bell Squawk On Exit Delay	No Bell Squawk On Exit Delay	5.18	24
OFF	___	4	Bell Squawk On Entry Delay	No Bell Squawk On Entry Delay	5.18	24
OFF	___	5	Bell Squawk On Trouble	No Bell Squawk On Trouble	3.4	8
ON	___	6	Audible Exit with Urgency	Silent Exit Delay	5.18	24
OFF	___	7	Exit Delay Termination Enabled	Exit Delay Termination Disabled	5.18	24
OFF	___	8	Fire Bell is Continuous	Fire Bell Follows Bell Cut-off	5.13	23

[015] Third System Option Code

Default		Option	ON	Off	Section	Page #
ON	___	1	Fire Keys Enabled	Fire Keys Disabled	5.16	23
OFF	___	2	Panic Keys Audible (Bell / Beeps)	Panic Keys Silent	5.16	23
OFF	___	3	Quick Exit Enabled	Quick Exit Disabled	3.4	8
ON*	___	4	Quick Arming Enabled	Quick Arming Dis. / Function keys Req. Code	3.4	8
OFF	___	5	Code Required For Bypassing	No Code Required	3.4	8
OFF	___	6	Master Code Not Changeable	Master Code Changeable	5.1	15
ON	___	7	TLM Enabled	TLM Disabled	5.12	23
OFF	___	8	TLM Audible (Bell) When Armed	TLM Trouble Beeps When Armed	5.12	23

* When using a PC5132 version 2.1 or older with WLS909 Wireless Keys, option [4] must be ON for the Arm button to work.

[016] Fourth System Option Code

Default		Option	ON	Off	Section	Page #
ON	___	1	AC Trouble Displayed	AC Trouble Not Displayed	3.4	8
OFF	___	2	Trouble Light Flashes if AC Fails	Trouble Light Does Not Follow AC Status	3.4	8
OFF	___	3	Blank Keypad When Not Used	Keypad Active Always	5.22	25
OFF	___	4	Code Required to Remove Kypd Blanking	No Code Required	5.22	25
ON	___	5	Keypad Backlighting is enabled	Keypad Backlighting is disabled	5.23	25
OFF	___	6	Power Save Mode enabled	Power Save Mode disabled	5.22	25
OFF	___	7	Bypass Status Displayed While Armed	Bypass Status Not Displayed While Armed	5.17	24
OFF	___	8	Keypad Tampers enabled	Keypad Tampers disabled	5.25	26

[017] Fifth System Option Code

Default		Option	ON	Off	Section	Page #
ON	___	1	WLS Key Does Not Use Access Codes*	WLS Key Uses Access Codes	5.17	24
OFF	___	2-7	For future use			
OFF	___	8	Squawk on Away Arming/Disarming Only	Bell Squawk on all Arming/Disarming	5.17	24

**This option must be enabled when using a PC5132 v2.1 or earlier.*

[020] Keypad Zone Assignments (Section 2.11 "Keypad Zones" on page 6)

NOTE:*Only one keypad may be assigned to a zone.*

Default			
00	___ ___	Keypad (slot 1) Zone	Valid entries are zones 01-08
00	___ ___	Keypad (slot 2) Zone	Valid entries are zones 01-08
00	___ ___	Keypad (slot 3) Zone	Valid entries are zones 01-08
00	___ ___	Keypad (slot 4) Zone	Valid entries are zones 01-08
00	___ ___	Keypad (slot 5) Zone	Valid entries are zones 01-08
00	___ ___	Keypad (slot 6) Zone	Valid entries are zones 01-08
00	___ ___	Keypad (slot 7) Zone	Valid entries are zones 01-08
00	___ ___	Keypad (slot 8) Zone	Valid entries are zones 01-08

[030] Zone Loop Response Options

Default		Option	ON	Off	Section	Page #
OFF	___	1	Zone 1 is Fast Loop Response	Zone 1 is Normal Loop Response	5.24	25
OFF	___	2	Zone 2 is Fast Loop Response	Zone 2 is Normal Loop Response	5.24	25
OFF	___	3	Zone 3 is Fast Loop Response	Zone 3 is Normal Loop Response	5.24	25
OFF	___	4	Zone 4 is Fast Loop Response	Zone 4 is Normal Loop Response	5.24	25
OFF	___	5-8	For future use			

Advanced System Programming

Zone Attributes (Section 5.3 "Zone Attributes" on page 16)

Zone Attribute Defaults (Y = Option ON; N = Option OFF):

Attribute:	1	2	3	4	5	6	7	8
ON	Audible	Steady	Chime	Bypass	Force	Swing	Tx. Delay	Wireless Zn.
OFF	Silent	Pulsed	No	No	No	No	No	No
Zone Type:								
00 Null Zone	N	N	N	N	N	N	N	N
01 Delay 1	Y	Y	Y	Y	N	Y	N	N
02 Delay 2	Y	Y	Y	Y	N	Y	N	N
03 Instant	Y	Y	Y	Y	N	Y	N	N
04 Interior	Y	Y	N	Y	N	Y	N	N
05 Int. Stay/Away	Y	Y	N	Y	Y	Y	N	N
06 Dly. Stay/Away	Y	Y	N	Y	Y	Y	N	N
07 Dly. 24hr Fire (Hardw.)	Y	N	N	N	N	N	N	N
08 Stand. 24hr Fire (Hardw.)	Y	N	N	N	N	N	N	N
09 24hr Superv.	N	Y	N	N	Y	N	N	N
10 24hr Superv. Buzzer	N	Y	N	Y	N	N	N	N
11 24hr Burglary	Y	Y	N	Y	N	N	N	N
12 24hr Holdup	N	Y	N	N	N	N	N	N
13 24hr Gas	Y	N	N	N	N	N	N	N
14 24hr Heating	Y	N	N	N	N	N	N	N
15 24hr Medical	Y	Y	N	N	N	N	N	N
16 24hr Panic	Y	Y	N	N	N	N	N	N
17 24hr Emergency	Y	Y	N	N	N	N	N	N
18 24hr Sprinkler	Y	Y	N	N	N	N	N	N
19 24hr Water	Y	Y	N	N	N	N	N	N
20 24hr Freeze	Y	Y	N	N	N	N	N	N
21 24hr Latching Tamper	Y	Y	N	N	N	N	N	N
22 Momentary Keyswitch	N	N	N	N	Y	N	N	N
23 Maintained Keyswitch	N	N	N	N	Y	N	N	N
24 LINKS Answer	N	N	N	N	Y	N	N	N
25 Interior Delay	Y	Y	N	Y	N	Y	N	N
87 Dly. 24hr Fire (Wireless)	Y	N	N	N	N	N	N	Y
88 Stand. 24hr Fire (Wireless)	Y	N	N	N	N	N	N	Y

Section	Zone #	Zone Type*	1	2	3	4	5	6	7	8
[101]	1	( )	____	____	____	____	____	____	____	____
[102]	2	( )	____	____	____	____	____	____	____	____
[103]	3	( )	____	____	____	____	____	____	____	____
[104]	4	( )	____	____	____	____	____	____	____	____
[105]	5	( )	____	____	____	____	____	____	____	____
[106]	6	( )	____	____	____	____	____	____	____	____
[107]	7	( )	____	____	____	____	____	____	____	____
[108]	8	( )	____	____	____	____	____	____	____	____
[109]	9	( )	____	____	____	____	____	____	____	____
[110]	10	( )	____	____	____	____	____	____	____	____
[111]	11	( )	____	____	____	____	____	____	____	____
[112]	12	( )	____	____	____	____	____	____	____	____
[113]	13	( )	____	____	____	____	____	____	____	____
[114]	14	( )	____	____	____	____	____	____	____	____
[115]	15	( )	____	____	____	____	____	____	____	____
[116]	16	( )	____	____	____	____	____	____	____	____

[117]	17	( )								
[118]	18	( )								
[119]	19	( )								
[120]	20	( )								
[121]	21	( )								
[122]	22	( )								
[123]	23	( )								
[124]	24	( )								
[125]	25	( )								
[126]	26	( )								
[127]	27	( )								
[128]	28	( )								
[129]	29	( )								
[130]	30	( )								
[131]	31	( )								
[132]	32	( )								

*Record here based on programming in sections [001] - [004]

PGM Output Attributes (Section 5.11 “PGM Output Options” on page 21)

Program only the following attributes for the PGM options listed. All others will be ignored. PGM options are programmed in [009].

PGM Attribute Defaults (Y = Attribute ON; N = Attribute OFF):

Attribute:	1	2	3	4	5
ON	Output enabled	—	True Output	Follows Timer	Code Req.
OFF	Output disabled	—	Inverted	On / Off	No Code Req.
PGM Option					
[01] Burg. / Fire Bell	Y		Y		
[03] Sensor Reset	Y		Y		N
[05] Armed Status	Y		Y		
[06] Ready To Arm	Y		Y		
[07] Kypd Bzz Follow	Y		Y		
[08] Courtesy Pulse	Y		Y		
[11] System Tamper			Y		
[12] TLM and Alarm			Y		
[13] Kiss-off			Y		
[14] Gnd Strt Pulse			Y		
[15] Remote Op.			Y		
[16] LINKS1000 Sup.			Y		
[17] Away Armed Status	Y		Y		
[18] Stay Armed Status	Y		Y		
[19] Comm. Output #1	Y		Y	Y	Y
[20] Comm. Output #2	Y		Y	Y	N

Attribute:	1	2	3	4	5	6	7	8
PGM Option								
ON	Serv. req.	AC Fail	TLM Fault	FTC	Zone Fault	Zone Tmp.	Zn. Low Bat.	Loss of Clock
OFF	Disabled	Disabled	Disabled	Disabled	Disabled	Disabled	Disabled	Disabled
[09] System Trouble	Y	Y	Y	Y	Y	Y	Y	Y
ON	Burg. Evnt.	Fire Evnt.	Panic Evnt.	Med. Evnt.	Supv. Evnt.	Priority Evnt.	Holdup Evnt.	Follows Timer*
OFF	Disabled	Disabled	Disabled	Disabled	Disabled	Disabled	Disabled	Latched
[10] System Event	Y	Y	Y	Y	Y	Y	Y	N
	*If attribute [8] is turned ON, attributes [1-7] must also be turned ON.							

Section	PGM #	Output Type*	1	2	3	4	5	6	7	8
[141]	1	( )								
[142]	2	( )								

*Record here based on programming in [009].

[160] Maximum Dialing Attempts to Each Telephone Number (Section 5.5 “Communicator – Dialing” on page 17)
Default: 008 |__|__|__| Valid entries are 001-015 attempts (do not enter 000).

[161] Post Dial Wait for Handshake (All Formats) (Section 5.5 “Communicator – Dialing” on page 17)
Default: 040 |__|__|__| Valid entries are 001-255 seconds

[164] PGM Output Timer (Section 5.5 “Communicator – Dialing” on page 17)
Default: 005 |__|__|__| Valid entries are 001-255 seconds

[202] Zone Assignments 01-08 (Section 5.2 “Zone Programming” on page 15)
Program zone definitions in sections [001] - [004] and zone attributes in sections [101] - [132]. Program keypad zone assignments in section [020].

NOTE:*Any zones not used on the system should be disabled in this section. Disabled wireless zones should have a blank serial number (i.e. [000000]).*

Zones 1-8: Default = ON; Zones 9-32: Default = OFF

Section	Option: 1	2	3	4	5	6	7	8
[202]	Zone 1	Zone 2	Zone 3	Zone 4	Zone 5	Zone 6	Zone 7	Zone 8
	|_____|	|_____|	|_____|	|_____|	|_____|	|_____|	|_____|	|_____|
[203]	Zone 9	Zone 10	Zone 11	Zone 12	Zone 13	Zone 14	Zone 15	Zone 16
	|_____|	|_____|	|_____|	|_____|	|_____|	|_____|	|_____|	|_____|
[204]	Zone 17	Zone 18	Zone 19	Zone 20	Zone 21	Zone 22	Zone 23	Zone 24
	|_____|	|_____|	|_____|	|_____|	|_____|	|_____|	|_____|	|_____|
[205]	Zone 25	Zone 26	Zone 27	Zone 28	Zone 29	Zone 30	Zone 31	Zone 32
	|_____|	|_____|	|_____|	|_____|	|_____|	|_____|	|_____|	|_____|

Communicator Programming

NOTE: *For sections [301] to [353], the content of every section by default is [F].*

[301] First Telephone Number (32 Digits) (Section 5.7 “Communicator – Telephone Numbers” on page 17)

|__|__|__|__|__|__|__|__|__|__|__|__|__|__|__|__|__|__|__|__|__|__|__|__|__|__|__|__|__|__|__|__|

[302] Second Telephone Number (32 Digits) (Section 5.7 “Communicator – Telephone Numbers” on page 17)

|__|__|__|__|__|__|__|__|__|__|__|__|__|__|__|__|__|__|__|__|__|__|__|__|__|__|__|__|__|__|__|__|

[303] Third Telephone Number (32 Digits) (Section 5.7 “Communicator – Telephone Numbers” on page 17)

|__|__|__|__|__|__|__|__|__|__|__|__|__|__|__|__|__|__|__|__|__|__|__|__|__|__|__|__|__|__|__|__|

[310] First/Third Telephone Number Account Code (Section 5.6 “Communicator – Account Numbers” on page 17)

|__|__|__|__|

[311] Second Telephone Number Account Code (Section 5.6 “Communicator – Account Numbers” on page 17)

|__|__|__|__|

Alarm Reporting Codes, Zones 1-32 (Section 5.8 “Communicator – Reporting Codes” on pg. 18, & Appendix A)

Section								
[320]	Zone 1	Zone 2	Zone 3	Zone 4	Zone 5	Zone 6	Zone 7	Zone 8
	|__|__|	|__|__|	|__|__|	|__|__|	|__|__|	|__|__|	|__|__|	|__|__|
[321]	Zone 9	Zone 10	Zone 11	Zone 12	Zone 13	Zone 14	Zone 15	Zone 16
	|__|__|	|__|__|	|__|__|	|__|__|	|__|__|	|__|__|	|__|__|	|__|__|
[322]	Zone 17	Zone 18	Zone 19	Zone 20	Zone 21	Zone 22	Zone 23	Zone 24
	|__|__|	|__|__|	|__|__|	|__|__|	|__|__|	|__|__|	|__|__|	|__|__|
[323]	Zone 25	Zone 26	Zone 27	Zone 28	Zone 29	Zone 30	Zone 31	Zone 32
	|__|__|	|__|__|	|__|__|	|__|__|	|__|__|	|__|__|	|__|__|	|__|__|

Alarm Restoral Reporting Codes, Zones 1-32 (Section 5.8 "Communicator – Reporting Codes" on pg. 18, & Appendix A)

Section								
[324]	Zone 1	Zone 2	Zone 3	Zone 4	Zone 5	Zone 6	Zone 7	Zone 8
	___	___	___	___	___	___	___	___
[325]	Zone 9	Zone 10	Zone 11	Zone 12	Zone 13	Zone 14	Zone 15	Zone 16
	___	___	___	___	___	___	___	___
[326]	Zone 17	Zone 18	Zone 19	Zone 20	Zone 21	Zone 22	Zone 23	Zone 24
	___	___	___	___	___	___	___	___
[327]	Zone 25	Zone 26	Zone 27	Zone 28	Zone 29	Zone 30	Zone 31	Zone 32
	___	___	___	___	___	___	___	___

[328] Miscellaneous Alarm Reporting Codes (Section 5.8 "Communicator – Reporting Codes" on pg. 18, & Appendix A)

___ 1. Duress Alarm
___ 2. Opening After Alarm
___ 3. Recent Closing
___ 4. Zone Expander Supervisory Alarm
___ 5. Zone Expander Supervisory Restoral
___ 6. Cross Zone Police Code Alarm

[329] Priority Alarm and Restoral (Section 5.8 "Communicator – Reporting Codes" on pg. 18, & Appendix A)

___ 1. Keypad Fire Alarm
___ 2. Keypad Auxiliary Alarm
___ 3. Keypad Panic Alarm
___ 4. For future use
___ 5. Keypad Fire Restoral
___ 6. Keypad Auxiliary Restoral
___ 7. Keypad Panic Restoral
___ 8. For future use

Tamper Reporting Codes, Zones 1-32 (Section 5.8 "Communicator – Reporting Codes" on pg. 18, & Appendix A)

Section								
[330]	Zone 1	Zone 2	Zone 3	Zone 4	Zone 5	Zone 6	Zone 7	Zone 8
	___	___	___	___	___	___	___	___
[331]	Zone 9	Zone 10	Zone 11	Zone 12	Zone 13	Zone 14	Zone 15	Zone 16
	___	___	___	___	___	___	___	___
[332]	Zone 17	Zone 18	Zone 19	Zone 20	Zone 21	Zone 22	Zone 23	Zone 24
	___	___	___	___	___	___	___	___
[333]	Zone 25	Zone 26	Zone 27	Zone 28	Zone 29	Zone 30	Zone 31	Zone 32
	___	___	___	___	___	___	___	___

Tamper Restoral Reporting Codes, Zones 1-8 (Section 5.8 "Communicator – Reporting Codes" on pg. 18, & Appendix A)

Section								
[334]	Zone 1	Zone 2	Zone 3	Zone 4	Zone 5	Zone 6	Zone 7	Zone 8
	___	___	___	___	___	___	___	___
[335]	Zone 9	Zone 10	Zone 11	Zone 12	Zone 13	Zone 14	Zone 15	Zone 16
	___	___	___	___	___	___	___	___
[336]	Zone 17	Zone 18	Zone 19	Zone 20	Zone 21	Zone 22	Zone 23	Zone 24
	___	___	___	___	___	___	___	___
[337]	Zone 25	Zone 26	Zone 27	Zone 28	Zone 29	Zone 30	Zone 31	Zone 32
	___	___	___	___	___	___	___	___

[338] Miscellaneous Tamper Reporting Codes (Section 5.8 "Communicator – Reporting Codes" on pg. 18, & Appendix A)

___ 1. General System Tamper
___ 2. General System Tamper Rest.
___ 3. Keypad Lockout

Closing (Arming) Reporting Codes, Access Codes 1-32 (Section 5.8 "Communicator – Reporting Codes" on pg. 18, & Appendix A)

Section								
[339]	Code 1	Code 2	Code 3	Code 4	Code 5	Code 6	Code 7	Code 8
[340]	Code 9	Code 10	Code 11	Code 12	Code 13	Code 14	Code 15	Code 16
[341]	Code 17	Code 18	Code 19	Code 20	Code 21	Code 22	Code 23	Code 24
[342]	Code 25	Code 26	Code 27	Code 28	Code 29	Code 30	Code 31	Code 32

[343] Miscellaneous Closing (Arming) Reporting Codes
(Section 5.8 "Communicator – Reporting Codes" on pg. 18, & Appendix A)

1. Closing by Duress Code 33
2. Closing by Duress Code 34
3. Closing by Master Code 40
4. Closing by Supervisory Code 41
5. Closing by Supervisory Code 42
6. Partial Closing
7. Special Closing

Opening (Disarming) Reporting Codes, Access Codes 1-8 (Section 5.8 "Communicator – Reporting Codes" on pg. 18, & Appendix A)

Section								
[344]	Code 1	Code 2	Code 3	Code 4	Code 5	Code 6	Code 7	Code 8
[345]	Code 9	Code 10	Code 11	Code 12	Code 13	Code 14	Code 15	Code 16
[346]	Code 17	Code 18	Code 19	Code 20	Code 21	Code 22	Code 23	Code 24
[347]	Code 25	Code 26	Code 27	Code 28	Code 29	Code 30	Code 31	Code 32

[348] Miscellaneous Opening (Disarming) Reporting Codes
(Section 5.8 "Communicator – Reporting Codes" on pg. 18, & Appendix A)

1. Opening by Duress Code 33
2. Opening by Duress Code 34
3. Opening by Master Code 40
4. Opening by Supervisory Code 41
5. Opening by Supervisory Code 42
6. Auto Arm Cancellation
7. Special Opening

[349] Maintenance Alarm Reporting Codes (Section 5.8 "Communicator – Reporting Codes" on pg. 18, & Appendix A)

1. Battery Trouble Alarm
2. AC Failure Trouble Alarm
3. Bell Circuit Trouble Alarm
4. Fire Trouble Alarm
5. Auxiliary Power Supply Trouble Alarm
6. TLM Trouble Code (via LINKS)
7. For future use
8. General System Supervisory

[350] Maintenance Restoral Reporting Codes (Section 5.8 "Communicator – Reporting Codes" on pg. 18, & Appendix A)

1. Battery Trouble Restoral
2. AC Failure Trouble Restoral
3. Bell Circuit Trouble Restoral
4. Fire Trouble Restoral
5. Auxiliary Power Supply Trouble Restoral
6. TLM Restoral
7. For future use
8. General System Supervisory Restore

[351] Miscellaneous Maintenance Reporting Codes (Section 5.8 "Communicator – Reporting Codes" on pg. 18, & Appendix A)

1. Telephone Number 1 FTC Restore
2. Telephone Number 2 FTC Restore
3. Event Buffer 75% Full Since Last Upload
4. DLS Lead IN
5. DLS Lead OUT
6. Zone Fault Alarm
7. Zone Fault Restore
8. Delinquency Code

[352] Test Transmission Reporting Codes (Section 5.8 "Communicator – Reporting Codes" on pg. 18, & Appendix A)

|___|___| 1. Periodic Test Transmission |___|___| 3. LINKS1000 Test Transmission Code*

|___|___| 2. System Test

*The LINKS Test Transmission Code must be programmed as "00" for the LINKS Test Transmission to be disabled.

[353] Wireless Maintenance Reporting Codes (Section 5.8 "Communicator – Reporting Codes" on pg. 18, & Appendix A)

|___|___| 1. Wireless Device Low Battery Alarm |___|___| 2. Wireless Device Low Battery Restore

[360] Communicator Format Options (Section 5.9 "Communicator – Reporting Formats" on page 19)

NOTE: *The Third telephone number follows the format of the First telephone number.*

Default

02 |___|___| 1st/3rd Telephone Number

02 |___|___| 2nd Telephone Number

01 20 BPS, 1400 HZ handshake
02 20 BPS, 2300 HZ handshake
03 DTMF CONTACT ID
04 SIA FSK
05 Pager
06 Residential Dial
07 10 BPS, 1400Hz Handshake
08 10 BPS, 2300Hz Handshake

[361] Alarm/Restore Communicator Call Directions (Section 5.5 "Communicator – Dialing" on page 17)

Default		Option	ON	OFF
ON	|___|	1	1st Telephone Number	Disabled
OFF	|___|	2	2nd Telephone Number	Disabled
OFF	|___|	3	1st Telephone Number (via LINKS)	Disabled
OFF	|___|	4	2nd Telephone Number (via LINKS)	Disabled
OFF	|___|	5-8	For future use	

[363] Tamper/Restore Communicator Call Directions (Section 5.5 "Communicator – Dialing" on page 17)

Default		Option	ON	OFF
ON	|___|	1	1st Telephone Number	Disabled
OFF	|___|	2	2nd Telephone Number	Disabled
OFF	|___|	3	1st Telephone Number (via LINKS)	Disabled
OFF	|___|	4	2nd Telephone Number (via LINKS)	Disabled
OFF	|___|	5-8	For future use	

[365] Opening/Closing Communicator Call Directions (Section 5.5 "Communicator – Dialing" on page 17)

Default		Option	ON	OFF
ON	|___|	1	1st Telephone Number	Disabled
OFF	|___|	2	2nd Telephone Number	Disabled
OFF	|___|	3	1st Telephone Number (via LINKS)	Disabled
OFF	|___|	4	2nd Telephone Number (via LINKS)	Disabled
OFF	|___|	5-8	For future use	

[367] System Maintenance Alarm/Restore Communicator Call Directions (Section 5.5 "Communicator – Dialing" on page 17)

Default		Option	ON	OFF
ON	|___|	1	1st Telephone Number	Disabled
OFF	|___|	2	2nd Telephone Number	Disabled
OFF	|___|	3	1st Telephone Number (via LINKS)	Disabled
OFF	|___|	4	2nd Telephone Number (via LINKS)	Disabled
OFF	|___|	5-8	For future use	

[368] System Test Transmissions Communicator Call Directions (Section 5.5 "Communicator – Dialing" on page 17)

Default		Option	ON	OFF
ON	|___|	1	1st Telephone Number	Disabled
OFF	|___|	2	2nd Telephone Number	Disabled
OFF	|___|	3	1st Telephone Number (via LINKS)	Disabled
OFF	|___|	4	2nd Telephone Number (via LINKS)	Disabled
OFF	|___|	5-8	For future use	

NOTE: *The LINKS1000 backup call directions will only back up their respective telephone numbers.*

[370] Communication Variables

Default			Section	Page #
003	Swinger Shutdown (Alarms and Rest)	(001-014 Transmissions, 000=disabled)	5.19	25
003	Swinger Shutdown (Tampers and Rest)	(001-014 Transmissions, 000=disabled)	5.19	25
003	Swinger Shutdown (Maint and Rest)	(001-014 Transmissions, 000=disabled)	5.19	25
000	Transmission Delay	(001-255 seconds)	5.15	23
030	AC Failure Communication Delay	(001-255 minutes)	5.8	18
003	TLM Trouble Delay	(No. of checks required - valid entries 003 - 255)	5.12	23
030	Test Transmission Cycle (land line)	(001-255 minutes/days)†	5.14	23
030	Test Transmission Cycle (LINKS)	(001-255 days)	5.14	23
007	Zone Low Battery Transmission Delay	(000-255 days)	5.8	18
030	Delinquency Transmission Cycle	(000-255 days/hours)	5.8	18

†Depends on programming in section [702], option [3].

NOTE: *To disable the AC failure communications delay, program [000].*

[371] Test Transmission Time of Day (Section 5.14 "Test Transmission" on page 23)

NOTE: *If the land line test transmission cycle is programmed in minutes (section [702], option [3]), this section will not affect the land line test transmission cycle.*

Default
9999 (Valid entries are 0000-2359, 9999 to disable)

[380] First Communicator Option Code

Default	Option	ON	OFF	Section	Page #
ON	1	Communications Enabled	Communications Disabled	5.5	17
OFF	2	Restorals on Bell Time-out	Restorals Follow Zones	5.8	18
OFF	3	Pulse Dialing	DTMF Dialing	5.5	17
ON	4	Switch to Pulse Dialing on 5th Attempt	DTMF Dial For All Attempts	5.5	17
OFF	5	3rd Telephone Number enabled	3rd Telephone Number disabled	5.7	17
OFF	6	Alternate Dial (1st and 3rd)	Call 1st Number, Backup to 3rd	5.7	17
OFF	7	Call LINKS as well as Land Line	LINKS is Backup of Land Line(s)	5.26	26
OFF	8	Delinquency Follows Zone Activity (Hours)	Delinquency Follows Arming (Days)	5.8	18

[381] Second Communicator Option Code

Default	Option	ON	OFF	Section	Page #
OFF	1	Open After Alarm Kypd Ringback enabled	Open After Alrm Kypd Ringback disabled	5.17	24
OFF	2	Open After Alarm Bell Ringback enabled	Open After Alrm Bell Ringback disabled	5.17	24
OFF	3	SIA Sends Programmed Rep. Codes	SIA Sends Automatic Rep. Codes	5.9	19
OFF	4	Closing Confirmation Enabled	Closing Confirmation Disabled	5.17	24
OFF	5-6	For future use	—		
ON	7	Contact ID Uses Programmed Rep. Codes	Contact ID Uses Automatic Rep. Codes	5.9	19
OFF	8	For future use	—		

[390] LINKS Preamble (First Telephone Number) (Section 5.26 "LINKS1000 Cellular Communicator" on page 26)

Default: FFFF (Program all unused digits with Hex F)

[391] LINKS Preamble (Second Telephone Number) (Section 5.26 "LINKS1000 Cellular Communicator" on page 26)

Default: FFFF (Program all unused digits with Hex F)

[392] LINKS Preamble (Third Telephone Number) (Section 5.26 "LINKS1000 Cellular Communicator" on page 26)

Default: FFFF (Program all unused digits with Hex F)

[393] LINKS Special Function Preamble (All Telephone Numbers) (Section 5.26 "LINKS1000 Cellular Communicator" on page 26)

Default: FFFFFF (Program all unused digits with Hex F)

- Enter [*][2][*] (HEX B) to dial [*]
- Enter [*][3][*] (HEX C) to dial [#]

Downloading Options

[401] First Downloading Option Code (Section 5.10 "Downloading" on page 20)

Default		Option	ON	Off
OFF	___	1	Answering machine/double call enabled	Answering machine/double call disabled
ON	___	2	User Can Enable DLS Window	User Cannot Enable DLS Window
OFF	___	3	Call-Back Enabled	Call-Back Disabled
OFF	___	4	User-initiated call-up enabled	User-initiated call-up disabled
OFF	___	5-8	For future use	

[402] Downloading Computer's Telephone Number (32 Digits) (Section 5.10 "Downloading" on page 20)
_____

[403] Downloading Access Code (Section 5.10 "Downloading" on page 20)
Default: 0580 ____ Enter 4 HEX digits

[404] Panel Identification Code (Section 5.10 "Downloading" on page 20)
Default: 0580 ____ Enter 4 HEX digits

[405] Answering Machine Double-call Timer (Section 5.10 "Downloading" on page 20)
Default: 060 ___ (Valid entries are 001-255 seconds)

[406] Number of Rings to Answer On (Section 5.10 "Downloading" on page 20)
Default: 000 ___ (Valid entries are 000-255 rings)

[490] LINKS Preamble (Downloading Telephone Number) (Section 5.10 "Downloading" on page 20)
Default: FFFF ____ (Program all unused digits with Hex F)

[499] [Installer's Code] [499] Initiate PC-Link (Local Downloading) (Section 5.10 "Downloading" on page 20)

International Programming

[700] Clock Adjust (Section 5.28 "Clock Adjust" on page 26)
Default: 60 __ (Valid entries are 01-99 seconds)

[701] First International Options Code

Default		Option	ON	Off	Section	Page #
OFF	___	1	50 Hz AC	60 Hz AC	2.2	3
OFF	___	2	Time Base is Internal Crystal	Time Base is AC Line	5.29	27
OFF	___	3	AC/DC Arming Inhibit enabled	AC/DC Arming Inhibit disabled	5.17	24
OFF	___	4	All System Tampers Require Installer Reset	All System Tampers follow Restore	5.25	26
OFF	___	5	6-Digit User Access Codes	4-Digit User Access Codes	5.1	15
OFF	___	6	Busy tone detection enabled	Busy tone detection disabled	5.5	17
OFF	___	7	High Current Battery Charge	Standard Current Battery Charge	2.2	3
OFF	___	8	For future use			

[702] Second International Options Code

Default		Option	ON	Off	Section	Page #
OFF	___	1	Pulse Dialing Make/Break Ratio is 33/67	Pulse Dialing Make/Break Ratio is 40/60	5.5	17
ON	___	2	Force Dialing enabled	Force Dialing disabled	5.5	17
OFF	___	3	Land line Test Transmission in minutes	Land line Test Transmission in days	5.14	23
OFF	___	4	1600 Hz Handshake	Standard Handshake	5.9	19
OFF	___	5	ID Tone enabled	ID Tone disabled	5.5	17
OFF	___	6	2100 HZ ID Tone	1300 Hz ID Tone	5.5	17
OFF	___	7	One Time 1-Hr User enabled DLS Window	Full 6-Hr User enabled DLS Window	5.10	20
OFF	___	8	Bell on FTC when armed	FTC Trouble only when armed	5.5	17

[703] Delay Between Dialing Attempts (Section 5.5 "Communicator – Dialing" on page 17)

Default: 001 ___ (Valid entries are 000-255 Seconds)

Module Programming

[801] PC5400 Printer Module Programming
Please refer to your PC5400 Installation Manual for installation and programming instructions.

[803] Alternative Communicator Programming
Please refer to your LINKS2X50 Installation Manual for installation and programming instructions.

[804] PC5132 Wireless Expansion Programming
Please refer to your PC5132 Installation Manual for programming locations and instructions.

Special Installer Functions

[901] Installer Walk Test Mode Enable / Disable (Section 5.32 “Walk Test (Installer)” on page 27)

[902] Module Supervision Reset (Section 2.7 “Removing Modules” on page 5)

[903] Module Supervision Field (Section 2.6 “Supervision” on page 5)

[904] Wireless Module Placement Test
For more information, please refer to your PC5132 Installation Manual

- Select the module / transmitter (Zones 01-32).
- Press [#] to Cancel.

Placement	Led Keypad	LCD Keypad	Bell / Buzzer
Good	Light 1 ON Steady	“GOOD”	1 Beep / Squawk
Fair	Light 2 ON Steady	“FAIR”	2 Beeps / Squawks
Bad	Light 3 ON Steady	“BAD”	3 Beeps / Squawks

[990] Installer Lockout Enable (Section 5.31 “Installer’s Lockout” on page 27)

[991] Installer Lockout Disable (Section 5.31 “Installer’s Lockout” on page 27)

[993] Restore Alternative Communicator to Factory Default Programming
(Section 5.30 “Resetting Factory Defaults” on page 27)

[996] Restore PC5132 to Factory Default Programming (Section 5.30 “Resetting Factory Defaults” on page 27)

[997] Restore PC5400 to Factory Default Programming (Section 5.30 “Resetting Factory Defaults” on page 27)

[999] Restore PC585 to Factory Default Programming (Section 5.30 “Resetting Factory Defaults” on page 27)

Appendix A: Reporting Codes

The following tables contain Contact ID and Automatic SIA format reporting codes. For more information on reporting code formats and notes about individual reporting codes, see sections 5.8 *"Communicator – Reporting Codes"* on page 18 and 5.9 *"Communicator – Reporting Formats"* on page 19.

Contact ID

The first digit (in parentheses) will automatically be sent by the control. The second two digits are programmed to indicate specific information about the signal.

For example, if zone 1 is an entry/exit point, you could program the event code as [34]. The central station would receive the following:

***BURG - ENTRY/EXIT - 1**

where the "1" indicates which zone went into alarm.

SIA Format - Level 2 (Hardcoded)

The SIA communication format used in this product follows the level 2 specifications of the SIA Digital Communication Standard - January 1996. This format will send the Account Code along with its data transmission. The transmission would look similar to the following at the receiver:

N Ri01 BA 01

N	=	New Event
Ri01	=	Partition /Area Identifier
BA	=	Burglary Alarm
01	=	Zone 1

Section #	Reporting Code	Code Sent When...	Dialer Direction*	Contact ID Codes	SIA Auto Rep Codes**
[320]	Zone Alarms	zone goes into alarm	A/R	(1) 3A	See Table 3
[324]	Zone Restorals	alarm condition has been restored	A/R	(1) 3A	
[330] [334]	Zone Tamper/Restoral	zone exhibits a tamper condition/tamper condition restored	T/R	(1) 44	TA-ZZ/TR-ZZ
[328]	Duress Alarm	duress code entered at keypad	A/R	(1) 21	HA-00
[328]	Opening After Alarm	system disarmed with alarm in memory	A/R	(4) A6	OR-00
[328]	Recent Closing	alarm occurs within two minutes of system arming	A/R	(4) 59	CR-00
[328]	Zone Expander Supervisory Alarm/Rest.	panel loses/restores supervisory transmission over the Keybus from enrolled PC5132 module or keypads with zone inputs	A/R	(1) 43	UA-00/UH-00
[328]	Cross Zone (Police Code) Alarm	two zones on the same partition go into alarm during any given armed-to-armed period (incl. 24Hr zones)	A/R	(1) 4A	BV-00
[329]	[F] Key Alarm/Rest.	Keypad fire alarm (alarm and restore rep. codes sent together)	A/R	(1) 15	FA-00/FH-00
[329]	[A] Key Alarm/Rest.	Keypad auxiliary alarm (alarm and restore rep. codes sent together)	A/R	(1) AA	MA-00/MH-00
[329]	[P] Key Alarm/Rest.	Keypad panic alarm (alarm and restore rep. codes sent together)	A/R	(1) 2A	PA-00/PH-00
[338]	General System Tamper/ Rest.	enrolled module with tamper inputs has a tamper alarm/ all module tampers restored	T/R	(1) 45	TA-00/TR-00
[338]	Keypad Lockout	max. number of incorrect access codes has been entered at a keypad	T/R	(4) 21	JA-00
[339-343]	Closings	system armed (user 01-34, 40-42 indicated)	O/C	(4) A2	CL-UU
[343]	Partial Closing	one or more zones bypassed when system armed	O/C	(4) 7A	CG-ZZ
[343]	Special Closing	Closing (arming) using one of the following methods: quick arm, auto arm, keyswitch, function key, maintenance code, DLS software	O/C	(4) AA	CL-00
[344-348]	Openings	system disarmed (user 01-34, 40-42 indicated)	O/C	(4) A2	OP-UU
[348]	Auto Arm Cancellation	auto arm cancelled	O/C	(4) A5	CE-00
[348]	Special Opening	Opening (disarming) using one of the following methods: keyswitch, maintenance code, DLS software	O/C	(4) AA	OP-00
[349-350]	Battery Trouble/Rest.	PC585 battery is low/battery restored	MA/R	(3) A2	YT-00/YR-00

* A/R = alarms/restorals; T/R = tampers/restorals; O/C = openings/closings; MA/R = miscellaneous alarms/restorals; T = test transmissions
** UU = user number (user01-42); ZZ = zone number (01-08)

Section #	Reporting Code	Code Sent When...	Dialer Direction*	Contact ID Codes	SIA Auto Rep Codes**
[349-350]	AC Line Trouble/Rest.	AC power to control panel is disconnected or interrupted/AC power restored (Both codes follow AC Failure Comm. Delay.)	MA/R	(3) A1	AT-00/AR-00
[349-350]	Main Bell Trouble/Rest.	open circuit detected across bell terminals/bell circuit closed	MA/R	(3) 21	UT-99/UJ-99
[349-350]	Fire Trouble/Rest.	a trouble occurs/restores on a fire zone	MA/R	(3) 73	FT-00/FJ-00
[349-350]	Auxiliary Power Trouble/ Rest.	aux voltage supply trouble/restoral	MA/R	(3) AA	YP-00/YQ-00
[349]	TLM Failure	telephone line monitoring trouble (sent via LINKS. Do not program if LINKS not used)	MA/R	(3) 51	LT-00
[350]	TLM Restore	Telephone line trouble restore	MA/R	(3) 51	LR-00
[349-350]	Gen System Supervisory Trouble/Rest.	control panel loses/restores communications with module(s) connected to the Keybus	MA/R	(3) 33	ET-00/ER-00
[351]	Line 1 or 2 FTC Restoral	control panel has restored communications to central station on line 1 or 2 (after FTC)	MA/R	(3) 54	YK-00
[351]	Event Buffer is 75% Full	event buffer is almost full since last upload	MA/R	(6) 23	JL-00
[351]	DLS Lead In	downloading session start	MA/R	(4) 11	RB-00
[351]	DLS Lead Out	downloading session complete	MA/R	(4) 12	RS-00
[351]	Zone Fault/Rest.	one or more zones have faults/restored	MA/R	(3) 72	UT-00/UJ-00
[351]	Delinquency	programmed amount of time (days or hours) for delinquency has expired without zone activity or without system being armed	MA/R	(4) 54***	CD-00
[352]	Periodic Test	periodic system test transmission	T	(6) A2	RP-00
[352]	System Test	[*][6] bell/communications test	T	(6) A1	RX-00
[352]	LINKS Test	LINKS test transmission	T	(6) A3	TX-00
[353]	Wireless Device Low Battery Trouble/Rest.	wireless zones (WLS904, WLS905, WLS907); panic pendants (WLS908); handheld keypads (WLS910); wireless keys (WLS909) have low battery/all low batteries restored	MA/R	(3) 84	XT-00/XR-00

* A/R = alarms/restorals; T/R = tampers/restorals; O/C = openings/closings; MA/R = miscellaneous alarms/restorals; T = test transmissions
** UU = user number (user01-42); ZZ = zone number (01-08)
***Program the "Fail to close" event code [(4)54] to report either closing or activity delinquency. Make sure your central station is aware of the application of this reporting code.

Table2: Contact ID Zone Alarm/Restoral Event Codes (as per ADEMCO):

Program any of these codes for zone alarms/restorals when using the standard (non-automatic) Contact ID reporting format.

Medical Alarms
(1)AA Medical
(1)A1 Pendant Transmitter
(1)A2 Fail to Report In

Fire Alarms
(1)1A Fire Alarm
(1)11 Smoke
(1)12 Combustion
(1)13 Water Flow
(1)14 Heat
(1)15 Pull Station
(1)16 Duct
(1)17 Flame
(1)18 Near Alarm

Panic Alarms
(1)2A Panic
(1)21 Duress
(1)22 Silent
(1)23 Audible

Burglar Alarms
(1)3A Burglary
(1)31 Perimeter
(1)32 Interior
(1)33 24 Hour
(1)34 Entry / Exit
(1)35 Day / Night
(1)36 Outdoor
(1)37 Tamper
(1)38 Near Alarm

General Alarms
(1)4A General Alarm
(1)43 Exp. module failure
(1)44 Sensor tamper
(1)45 Module Tamper
(1)4A Cross Zone Police Code

24 Hour Non-Burglary
(1)5A 24 Hour non-Burg
(1)51 Gas detected
(1)52 Refrigeration
(1)53 Loss of Heat
(1)54 Water Leakage
(1)55 Foil Break
(1)56 Day Trouble
(1)57 Low bottled Gas level
(1)58 High Temp
(1)59 Low Temp
(1)61 Loss of Air Flow

Table 3: SIA Format Automatic Zone Alarm/Restoral Codes

Zone Definition	SIA Auto Rep Codes*
	Zone Alm/Rest.
Delay, Instant, Interior, Delay Stay/Away, Interior Stay/Away, 24Hr Burg.	BA-ZZ/BH-ZZ
Standard 24Hr Fire, Delayed 24Hr Fire	FA-ZZ/FH-ZZ
24Hr Supervisory	US-ZZ/UR-ZZ
24Hr Supervisory Buzzer	UA-ZZ/UH-ZZ
24Hr Sprinkler	SA-ZZ/SH-ZZ
24Hr Gas	GA-ZZ/GH-ZZ
24Hr Heat	KA-ZZ/KH-ZZ
24Hr Medical	MA-ZZ/MH-ZZ
24Hr Emergency (non-medical)	QA-ZZ/QH-ZZ
24Hr Waterflow	WA-ZZ/WH-ZZ
24Hr Freeze	ZA-ZZ/ZH-ZZ
24Hr Holdup	HA-ZZ/HH-ZZ
24Hr Panic	PA-ZZ/PH-ZZ
Latching 24Hr	BA-ZZ/BH-ZZ

* ZZ = zones 01-08

Appendix B: Programming LCD Keypads

If you have an LCD5500Z Keypad, additional programming is required for proper operation. The following is a description of the available programming options and their accompanying programming sections:

How to Enter LCD Programming
Follow the programming procedure as outlined in Section 4 by pressing [*][8][Installer's Code]. Press the [*] key. Enter the two digit Section number to be programmed.

Programmable Labels – Sections [01] - [08], [33], [34], [40], [44], [51], [52]
Zone labels and other LCD display identifiers can be customized to make operation of the system easier for the end user. The following procedure should be used for creating all LCD labels:

- Enter Installer's Programming. Enter the Number corresponding to the label to be programmed.
- Use the arrow keys (<>) to move the underline bar underneath the letter to be changed.
- Press the number key [1] to [9] corresponding to the letter you require. The first time you press the number the first letter will appear. Pressing the number key again will display the next letter. Refer to the following chart:
  [1] - A, B, C, 1 [2] - D, E, F, 2 [3] - G, H, I, 3 [4] - J, K, L, 4 [5] - M, N, O, 5
  [6] - P, Q, R, 6 [7] - S, T, U, 7 [8] - V, W, X, 8 [9] - Y, Z, 9,0 [0] - Space
- When the required letter or number is displayed use the arrow keys (<>) to scroll to the next letter.
- When you are finished programming the Zone Label, press the [*] key, scroll to "Save," then press [*].
- Continue from Step 2 until all Labels are programmed.

[01] to [32] Zone Labels (14 Characters)
Default: "Zone 1" - "Zone 32"

Record zone labels on page 29

[33] Fire Alarm Label (14 Characters)
Default: "Fire Zone" |__|__|__|__|__|__|__|__|__|__|__|__|__|__|

[34] System Label (14 Characters)
Default: "System" |__|__|__|__|__|__|__|__|__|__|__|__|__|__|

[40] to [44] [*][7][1-2] Command Output Option Labels (14 Characters)

[40] Default: "Command O/P 1"|__|__|__|__|__|__|__|__|__|__|__|__|__|__|

[44] Default: "Command O/P 2"|__|__|__|__|__|__|__|__|__|__|__|__|__|__|

[51] Fail to Arm Event Message
Default: "System Has Failed to Arm" |__|__|__|__|__|__|__|__|__|__|__|__|__|__|

[52] Alarm When Armed Event Message
Default: "Alarm Occurred While Armed < >"|__|__|__|__|__|__|__|__|__|__|__|__|__|__|

[60] First User Display Mask

Default		Option	ON	OFF
ON	|__|	1	Hold [P]anic Keys prompt ON	Hold [P]anic Keys prompt OFF
ON	|__|	2	Zone Bypassing prompt ON	Zone Bypass prompt OFF
ON	|__|	3	Troubles prompt ON	Troubles prompt OFF
ON	|__|	4	Alarm Memory prompt ON	Alarm Memory prompt OFF
ON	|__|	5	Door Chime Control prompt ON	Door Chime Control prompt OFF
ON	|__|	6	Access Codes prompt ON	Access Codes prompt OFF
ON	|__|	7	User Functions prompt ON	User Functions prompt OFF
ON	|__|	8	Output Control prompt ON	Output Control prompt OFF

[61] Second User Display Mask

Default		Option	ON	OFF
OFF	___	1	Installer Programming prompt ON	Installer Programming prompt OFF
ON	___	2	Stay Arm prompt ON	Stay Arm prompt OFF
ON	___	3	Quick Arm prompt ON	Quick Arm prompt OFF
ON	___	4	Interior Arm prompt ON	Interior Arm prompt OFF
OFF	___	5	Quick Exit prompt ON	Quick Exit prompt OFF
ON	___	6	View Event Buffer prompt ON	View Event Buffer prompt OFF
OFF	___	7-8	For future use	

[62] Third User Display Mask

Default		Option	ON	OFF
ON	___	1	System Test prompt ON	System Test prompt OFF
ON	___	2	Time and Date prompt ON	Time and Date prompt OFF
ON	___	3	Auto-Arm Control prompt ON	Auto-Arm Days prompt OFF
ON	___	4	Auto-Arm Time prompt ON	Auto-Arm Time prompt OFF
ON	___	5	Download Enable prompt ON	Download Enable prompt OFF
ON	___	6	Bright Control prompt ON	Bright Control prompt OFF
ON	___	7	Contrast Control prompt ON	Contrast Control prompt OFF
ON	___	8	Buzzer Control prompt ON	Buzzer Control prompt OFF

[63] Downloaded LCD Message Duration

Default: 003 ___ (Valid entries are 000-255, 000=Unlimited Message Display. This number represents the number of times the Downloaded message is cleared by pressing any key while the message is up after timeout)

[64] Key Options

Default		Option	ON	OFF
ON	___	1	[F]ire Keys enabled	[F]ire Keys disabled
ON	___	2	[A]uxiliary Keys enabled	[A]uxiliary Keys disabled
ON	___	3	[P]anic Keys enabled	[P]anic Keys disabled
OFF	___	4-8	For future use	

[65] Fourth User Display Mask

Default		Option	ON	OFF
ON	___	1	User Initiated Call-up Prompt ON	User Initiated Call-up Prompt OFF
OFF	___	2	For future use	
OFF	___	3	For future use	
ON	___	4	Command Output #1 prompt ON	Command Output #1 prompt OFF
ON	___	5	Command Output #2 prompt ON	Command Output #2 prompt OFF
OFF	___	6-8	For future use	

[66] Keypad Options

Default		Option	ON	OFF
ON	___	1	Display Access Code when Programming	Display 'X' when Programming
ON	___	2	Local Clock Display Enabled	Local Clock Display Disabled
OFF	___	3	Local Clock Displays 24 Hour time	Local Clock Displays AM/PM
ON	___	4	Auto Alarm Memory Scroll Enabled	Auto Alarm Memory Scroll Disabled
OFF	___	5-8	For future use	

[97] View Software Version

[98] Initiate Global Label Broadcast

All LCD programming is done per keypad. If more than one LCD keypad are present on the system, and the PC5400 receives labels, labels programmed at one keypad can be broadcast to all other LCD keypads. Perform the following procedure in order to broadcast labels:
Step 1 - Program one LCD keypad completely.
Step 2 - Make sure all LCD keypads are connected to the Keybus.
Step 3 - Enter Installer's Programming, then enter Section [98] at the keypad that was programmed. The keypad will now broadcast all the information programmed to all the other LCD keypads on the system.
Step 4 - When the keypad is finished press the [#] key to exit.

[99] Reset LCD EEPROM to Factory Defaults

ASCII Characters

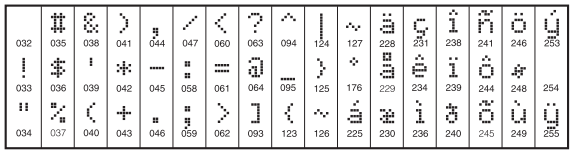

PC585 Module Compatibility

Module	Compatible?	Comments
Classic Escort (VPM-1)	No	
Escort5580	No	
PC-16 Out	No	
PC5204	No	
PC5208	No	
PC5108	No	
PC5108L	No	
PC5132 v1.X	Yes	No support for Wireless Keys, Pendants or Handheld Keypads
PC5132 v2.X	Yes	No identified Wireless Keys support
PC5132 v3.X	Yes	
PC5506	No	
PC55XX	Yes	No Keypad zone support
PC55XXZ	Yes	
PC5509	Yes	
LCD5500 v1.X	Yes	No Keypad zone support; Some display messages not supported
LCD5500Z v2.X	Yes	
LCD600	No	
LED615	No	
SL-XX	No	
PC1500RK	No	
PC1555RKZ	Yes	
PC5908	No	
PC5928	No	
PC5400 Printer Module v1.X to v2.1	Yes	Some printing messages not supported
PC5400 Printer Module v2.2	Yes	
Links1000	Yes	
Links2150	Yes	
Links2450	Yes	

Changes for PC585 v2.3

The PC585 v2.3 software incorporates several new features and changes. The most important additions are listed below:

Number of Zones

System expandable to 8 zones using keypad zone inputs and to 32 zones using the PC5132 wireless expansion module. (See 1.2 *"Additional Devices"* on page 2.)

New Options & Features

- New access code attribute option determines whether the bell squawks on arming/disarming. (See *"[*][5] Programming Access Codes"* on page 10.)
- New option allows bell squawk on Away arming only (See 5.17 *"Arming/Disarming Options"* on page 24.)
- Users can restart the exit delay once by pressing the Away key.

New Downloading Software

Downloading software DLS-1 v6.7 must be used. Do not attempt to perform downloading/uploading functions with other software versions.

Default Changes

- Section [006] Installer's code: 5555
- Section [160], Maximum Number of Dialing Attempts - valid entries (000-015)

©1998 Digital Security Controls Ltd.
1645 Flint Road, Downsview, Ontario, Canada M3J 2J6
(416) 665-8460 • Fax (416) 665-7498 • 1-800-387-3630
www.dscgrp.com
Printed in Canada 29003285 R0