GSM Module Installation

1

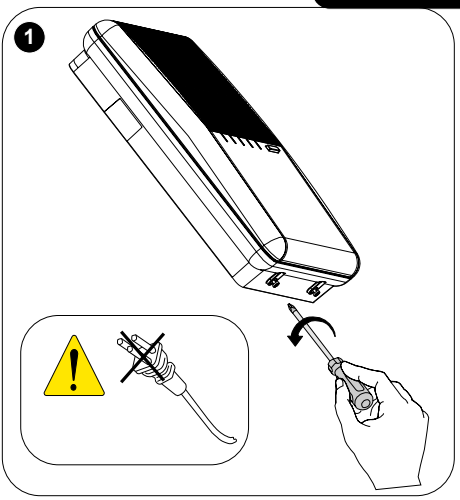

2

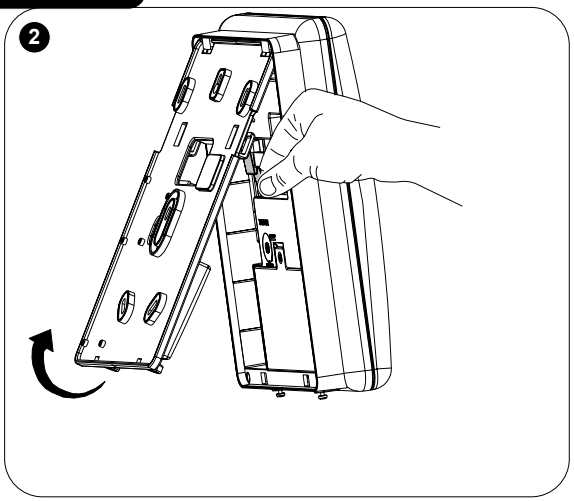

3

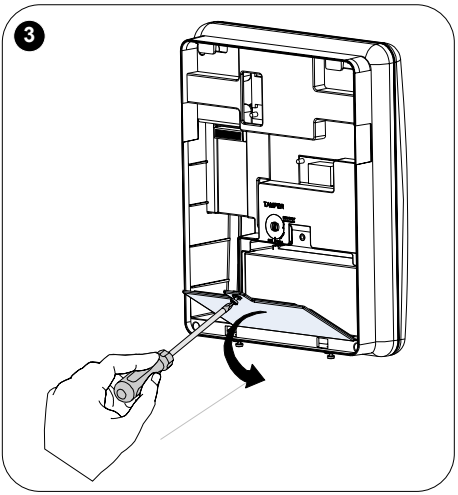

4

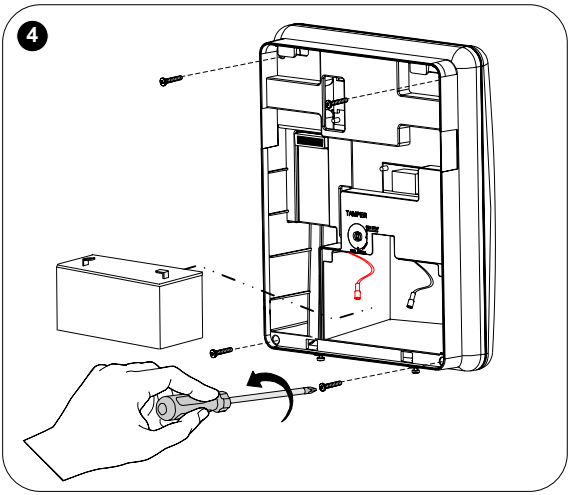

5

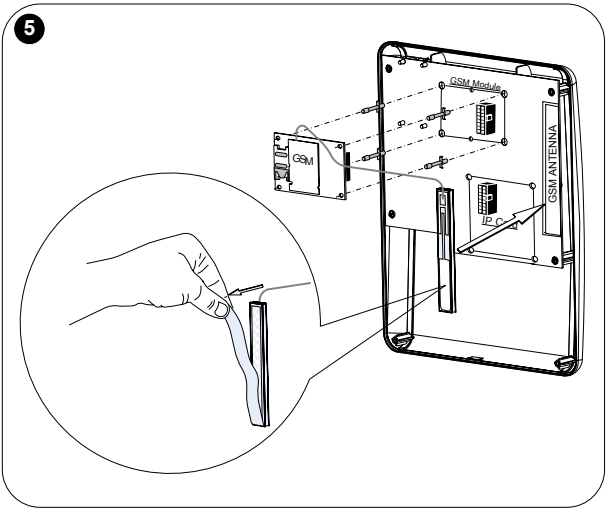

5.5-7.2 VDC

Standby: 35 mA
Comm.: 300 mA

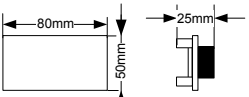

-10°C > 60°C
(14°F > 140°F)

-40°C > 60°C
(-40°F > 140°F)

≤ 80%.

© RISCO Group 09/08 5IN1093