3G2080(R)

Cellular Alarm Communicator – North America

TL2803G(R)

Internet and HSPA Dual-Path Alarm Communicator - North America

INSTALLATION GUIDE V4.0

For installation manual visit www.dsc.com

Warning: This manual contains information on limitations regarding product use and function and information on the limitations as to liability of the manufacturer.

WARNING: INSTALLER PLEASE READ CAREFULLY

Note to Installers
The warnings on this page contain vital information. As the only individual in contact with system users, it is the installer's responsibility to bring each item in this warning to the attention of all users of this system.

System Failures
This system has been carefully designed to be as effective as possible. There are circumstances, however, involving fire, burglary, or other types of emergencies where it may not provide protection. Any alarm system of any type may be compromised deliberately or may fail to operate as expected for a variety of reasons. Some, but not all, of the reasons may be:

Access by Intruders
Intruders may enter through an unprotected access point, circumvent a sensing device, evade detection by moving through an area of insufficient coverage, disconnect a warning device, or interfere with or prevent the proper operation of the system.

Component Failure
Although every effort has been made to make this system as reliable as possible, the system may fail to function as intended due to the failure of a component.

Compromise of Radio Frequency (Wireless) Devices
Signals may not reach the receiver under all circumstances which could include metal objects placed on or near the radio path or deliberate jamming or other inadvertent radio signal interference.

Criminal Knowledge
This system contains security features which were known to be effective at the time of manufacture. It is possible for persons with criminal intent to develop techniques which reduce the effectiveness of these features. It is important that your security system be reviewed periodically to ensure that its features remain effective and that it is updated or replaced if it is found that it does not provide the protection expected.

Failure of Replaceable Batteries
This system's wireless transmitters have been designed to provide several years of battery life under normal conditions. The expected battery life is a function of the device environment, usage, and type. Ambient conditions such as high humidity, high or low temperatures, or large temperature fluctuations may reduce the expected battery life. While each transmitting device has a low battery monitor which identifies when the batteries need to be replaced, this monitor may fail to operate as expected. Regular testing and maintenance will keep the system in good operating condition.

Inadequate Installation
A security system must be installed properly in order to provide adequate protection. Every installation should be evaluated by a security professional to ensure that all access points and areas are covered. Locks and latches on windows and doors must be secure and operate as intended. Windows, doors, walls, ceilings and other building materials must be of sufficient strength and construction to provide the level of protection expected. A reevaluation must be done during and after any construction activity. An evaluation by the fire and/or police department is highly recommended if this service is available.

Inadequate Testing
Most problems that would prevent an alarm system from operating as intended can be found by regular testing and maintenance. The complete system should be tested weekly and immediately after a break-in, an attempted break-in, a fire, a storm, an earthquake, an accident, or any kind of construction activity inside or outside the premises. The testing should include all sensing devices, keypads, consoles, alarm indicating devices, and any other operational devices that are part of the system.

Insufficient Time
There may be circumstances when the system will operate as intended, yet the occupants will not be protected from an emergency due to their inability to respond to the warnings in a timely manner. If the system is remotely monitored, the response may not occur in time to protect the occupants or their belongings.

Motion Detectors
Motion detectors can only detect motion within the designated areas as shown in their respective installation instructions. They cannot discriminate between intruders and intended occupants. Motion detectors do not provide volumetric area protection. They have multiple beams of detection and motion can only be detected in unobstructed areas covered by these beams. They cannot detect motion which occurs behind walls, ceilings, floor, closed doors, glass partitions, glass doors or windows. Any type of tampering whether intentional or unintentional such as masking, painting, or spraying of any material on the lenses, mirrors, windows or any other part of the detection system will impair its proper operation.
Passive infrared motion detectors operate by sensing changes in temperature. However their effectiveness can be reduced when the ambient temperature rises near or above body temperature or if there are intentional or unintentional sources of heat in or near the detection area. Some of these heat sources could be heaters, radiators, stoves, barbecues, fireplaces, sunlight, steam vents, lighting and so on.

Power Failure
Control units, intrusion detectors, smoke detectors and many other security devices require an adequate power supply for proper operation. If a device operates from batteries, it is possible for the batteries to fail. Even if the batteries have not failed, they must be charged, in good condition and installed correctly. If a device operates only by AC power, any interruption, however brief, will render that device inoperative while it does not have power. Power interruptions of any length are often accompanied by voltage fluctuations which may damage electronic equipment such as a security system. After a power interruption has occurred, immediately conduct a complete system test to ensure that the system operates as intended.

Security and Insurance
Regardless of its capabilities, an alarm system is not a substitute for property or life insurance. An alarm system also is not a substitute for property owners, renters, or other occupants to act prudently to prevent or minimize the harmful effects of an emergency situation.

Smoke Detectors
Smoke detectors that are a part of this system may not properly alert occupants of a fire for a number of reasons, some of which follow. The smoke detectors may have been improperly installed or positioned. Smoke may not be able to reach the smoke detectors, such as when the fire is in a chimney, walls or roofs, or on the other side of closed doors. Smoke detectors may not detect smoke from fires on another level of the residence or building.
Every fire is different in the amount of smoke produced and the rate of burning. Smoke detectors cannot sense all types of fires equally well. Smoke detectors may not provide timely warning of fires caused by carelessness or safety hazards such as smoking in bed, violent explosions, escaping gas, improper storage of flammable materials, overloaded electrical circuits, children playing with matches, or arson.
Even if the smoke detector operates as intended, there may be circumstances when there is insufficient warning to allow all occupants to escape in time to avoid injury or death.

Telephone Lines
If telephone lines are used to transmit alarms, they may be out of service or busy for certain periods of time. Also an intruder may cut the telephone line or defeat its operation by more sophisticated means which may be difficult to detect.

Warning Devices
Warning devices such as sirens, bells, horns, or strobes may not warn people or waken someone sleeping if there is an intervening wall or door. If warning devices are located on a different level of the residence or premise, then it is less likely that the occupants will be alerted or awakened. Audible warning devices may be interfered with by other noise sources such as stereos, radios, televisions, air conditioners, other appliances, or passing traffic. Audible warning devices, however loud, may not be heard by a hearing-impaired person.

GENERAL

IMPORTANT

This installation manual shall be used in conjunction with the control panel. All the safety instructions specified within that manual shall be observed. The control panel is referenced as the “panel” throughout this document. This installation guide provides the basic wiring, programming and troubleshooting information. Use this guide in conjunction with the Installation Manual available online from the DSC website at www.dsc.com.

The HSPA(3G)/dual-path alarm communicator is a fixed, wall-mounted unit, and shall be installed in the location specified in these instructions.The equipment enclosure must be fully assembled and closed, with all the necessary screws/tabs, and secured to a wall before operation. Internal wiring must be routed in a manner that prevents:

- Excessive strain on wire and on terminal connections,
- Interference between power limited and non power limited wiring,
- Loosening of terminal connections, or
- Damage of conductor insulation.

WARNING: Never install this equipment during a lightning storm.

Safety Information

The installer must instruct the system user on each of the following:

- Do not attempt to service this product. Opening or removing covers may expose the user to dangerous voltages or other risks.
- Any servicing shall be referred to service persons only.
- Use authorized accessories only with this equipment.
- Do not stay close to the equipment during device operation.
- Do not touch the external antenna.

Model Information

This manual covers the following models of alarm communicators:TL2803G, TL2803GR, 3G2080, and 3G2080R. References to model names **TL2803G(R)** and **3G2080(R)** throughout this manual apply to all specified models unless stated differently. Models ending in “R” include a built-in RS-422 interface for connecting to third-party applications.

3G2080(R): Is a HSPA (3G) cellular alarm communicator that sends alarm communication to Sur-Gard System I-IP, II, III (SG-DRL3IP), IV (SG-DRL4IP), and 5 (SG-DRL5IP) central station receivers via a HSPA(3G)/GPRS digital cellular network.

TL2803G(R): Is an Internet and HSPA(3G) dual-path alarm communicator that sends alarm communication to Sur-Gard System I-IP, II, III, IV, and 5 central station receivers through Internet or a HSPA(3G)/GPRS digital cellular network.

The communicator can be used as either a backup or primary communicator. The communicator supports Internet Protocol (IP) transmission of panel and communicator events over Internet and/or HSPA/GPRS.

The cellular performance of the **3G2080(R)** or **TL2803G(R)** communicator depends greatly on HSPA(3G)/GPRS network coverage in the local area. The unit should not be mounted in the final location without first performing the communicator placement test below to determine the best location for radio reception (minimum of one green LED ON). Optional antenna kits (GS-15ANTQ, GS-25ANTQ and GS-50ANTQ) are available from DSC to improve signal strength as required.

NOTE: Prior to installation of the 3G2080(R) or TL2803G(R) communicator, confirm with your local service provider that the HSPA(3G)/GPRS network is available and active in the area where the communicator will be installed, and that radio signal strength (CSQ) is adequate.

Panel Mounting

The following communicators are compatible with HS2016, HS2032, HS2064, and HS2128 panels:

- **3G2080R**, **3G2080** (HSPA(3G)/GPRS only)
- **TL2803GR, TL2803G** (Internet + HSPA(3G)/GPRS dual-path)

NOTE: This manual covers communicator models with and without 'R' throughout entire manual unless specifically stated otherwise.

Features

- 128-bit AES encryption via cellular and Internet (NIST validation certificate number 2645).
- Back up or primary cellular alarm communication.
- Automatically switches to 2G (EDGE/GPRS) if HSPA(3G) service is not available.
- Ethernet LAN/WAN 10/100 BASE-T (TL2803G(R) only).
- Full event reporting to central station (UL/ULC listed).
- Fully redundant Internet and cellular dual-path alarm communication (TL2803G(R) only).
- Individual Internet and/or cellular periodic test transmission.
- Integrated call routing.
- Visual Verification (requires System 5 receiver) (not a UL feature).
- Remote firmware upgrade capability of the communicator and panel firmware via Internet and/or cellular.
- Dual-band operation: 850 MHz, and 1900 MHz (North America only).
- Panel remote uploading/downloading support via cellular and Internet.
- PC-LINK connection.
- Programmable labels.
- SIA and Contact ID (CID) formats supported.
- Signal strength and trouble display LEDs.
- Subscriber Identity Module (SIM) card included with communicator.
- Supervision heartbeats sent via cellular and Internet.
- Command and Control via SMS.

Technical Specifications

The input voltage to the Communicator can be drawn from an Underwriters Laboratories/Underwriters Laboratories Canada (UL/ULC) listed control panel or compatible power supply module such as **HSM2204** or **HSM2300**.

NOTE: Power supply must be Class 2, power limited.

UL/ULC Installation Requirements

NOTE: For equipment used at the protected premises and intended to facilitate IP communications (hubs, routers, NIDs, Digital Subscriber Line (DSL), cable modems), 24 hour back-up power is required. Where such cannot be facilitated, a secondary (back-up) communication channel is required.

ⓘ Domain Name Service (DNS) programming is not permitted in UL/ULC listed systems.

Notes for using Private, Corporate, and High Speed Data Networks:

Network access and domain access policies shall be set to restrict unauthorized network access, and spoofing or Denial of Service (DoS) attacks. Select an Internet Service Provider (ISP) that has redundant servers/systems, back-up power, routers with firewalls enabled, and methods to identify and protect against DoS attacks (e.g., via spoofing).

Notes for using Public Switched and Cellular Data Networks:

Communication channels shall be facilitated such that the communicator will restrict unauthorized access, which could otherwise compromise security. The communicator shall be located in a secured area.

- For **ULC Residential** Fire and Burglary applications the **TL2803G(R)** can be used as primary communication channel via either cellular or Ethernet or as a back-up in conjunction with the Digital Alarm Communicator Transmitter (DACT). Test transmission every 24 hours shall be enabled on each channel.
- For **ULC Commercial** Fire and Burglary applications the **3G2080(R)** and **TL2803G(R)** can be used as a passive communication module with the following security levels:
  - P1 (each channel cellular or Ethernet is independent)
  - P2 (cellular and Ethernet in back-up configuration, panel section **[851][005]** toggle option [5] OFF).
- P3 (cellular and Ethernet in redundant configuration, panel section **[851][005]** toggle option [5] ON).
- The communicator can also be used as an active communication system with the security levels A1-A4 (each channel cellular or Ethernet independent or together in a back-up/redundant configuration). For active line security systems AES128 bit encryption shall be enabled (at the monitoring station receiver) and the supervision heartbeat rate shall be set as **90** seconds (panel section **[851][004]** = 005A/90). The supervision window at the Signal Receiver Center (SRC)'s receiver shall be programmed as maximum of **180** (00B4/180) seconds.
- For **UL Residential** Fire and Burglary applications the **3G2080(R)** and **TL2803G(R)** can be used as the primary communication channel via either cellular or Ethernet, or as a back-up in conjunction with the DACT (30 day test transmission is required on each channel).
- For **UL Commercial** Burglary applications the **TL2803G(R)** can be used as dual signalling line communication system (cellular and Ethernet channels used in redundant configuration), standard line security and as encrypted line security.
- The supervision heartbeat shall be enabled (panel section **[851][005]** toggle option [1] (Ethernet) and/or toggle option [2] (cellular) shall be ON), toggle option [3] (supervision type) shall be ON and the supervision heartbeat rate shall be selected as **135** (0087/135) seconds (Option [004] = 0087). The supervision window at the supervising station shall be maximum **200** (00C8/200) seconds. For encrypted line security systems the encryption AES128 bit shall be enabled at the monitoring station receiver.
- For **UL Commercial** Burglary installations, the **3G2080(R)** is listed as a primary (sole) communication means (heartbeat must be enabled) or for supplementary (back-up) use in conjunction with a Plain Old Telephone Service (POTS) line dialer. When the heartbeat transmission over the Ethernet or cellular network is enabled, using the **TL2803G(R)** with a compatible control unit listed for standard/encrypted line security, it can provide line security for the alarm system over the primary line.
- The **TL2803G(R)** is also suitable to be used with a compatible control unit listed for dual line security transmission when used in conjunction with a DACT or a Public Switched Data Network (PSDN) transmitter, where the PSDN provides the line security and is the primary line. In this mode, alarm signals are required to be sent simultaneously over both communication methods.

Ratings Compatibility

Table 1: Communicator Ratings

Model	3G2080(R) Cellular only	TL2803G(R) Internet and Cellular
Power Supply Ratings		
Input Voltage	10.8-12.5 VDC Power is supplied from the panel's PC-Link header or a PCL-422 module in remote cabinet installations. In remote cabinet installations, the PCL-422 module located with the communicator is powered by either an HSM2204 or an HSM2300. Refer to the PCL-422 installation instructions for details.	
Current Consumption		
Standby Current	90mA @ 13.66V	120mA @ 13.66V
Alarm (Transmitting) Current	400mA @ 12V	
Operating Frequency	850MHz, 1900MHz	
Typical Antenna Gain	2dB**i**	
Environmental Specifications		
Operating Temperature	14°F to 131°F (-10°C to 55°C)	
Humidity	5% ~ 93% relative humidity, non-condensing	
Mechanical Specifications		
Board Dimensions (mm)	100 × 150 × 15	100 × 150 × 15
Weight (grams) with bracket	310	320

Table 2: Compatible Receivers, and Panels

Communicator	Receiver/ Panel	Description
3G2080(R)	Receiver	• Sur-Gard System I-IP Receiver, version 1.13+ • Sur-Gard System II Receiver, version 2.10+ • Sur-Gard SG-DRL3-IP, version 2.30+ (for Sur-Gard System III Receiver) • Sur-Gard SG-DRL4-IP version 1.20+ (for Sur-Gard System IV Receiver) • Sur-Gard SG-DRL5-IP version 1.00+ (for Sur-Gard System 5 Receiver)
TL2803G(R)	Panel	• HS2016 • HS2032 • HS2064 • HS2128

NOTE: Enter [*][8][Installer Code][900] at keypad to view the panel version number.

Products or components of products, which perform communications functions only shall comply with the requirements applicable to communications equipment as specified in UL60950 or CAN CSA C22.2. No. 60950-1, Information Technology Equipment - Safety - Part 1: General Requirements. Where network interfaces are external to the control unit or receiver, compliance to CAN CSA C22.2. No. 60950-1 is adequate. Such components include, but are not limited to: hubs; routers; NIDs; third-party communications service providers; DSL modems; and cable modems.

Communicator Installation Configuration

This HSPA(3G)/dual-path alarm communicator shall be installed by service persons only (service person is defined as a person having the appropriate technical training and experience necessary to be aware of hazards to which that person may be exposed to in performing a task and can also take measures to minimize the risks to that person or other persons). The Communicator shall be installed and used within an environment that provides the pollution degree max 2, overvoltages category II, in non-hazardous, indoor locations only. This manual shall be used with the installation manual of the panel which is connected to the communicator. All instructions specified within the panel manual must be observed.

All the local rules imposed by local electrical codes shall be observed and respected during installation.

Installing the Ethernet Cable(TL2803G(R) Only)

A Category 5 (CAT 5) Ethernet cable must be run from a source with Internet connectivity to the communicator module, inside the panel. The communicator end of the cable must be terminated with an RJ45 plug, which will connect to the communicator's RJ45 jack after the communicator is installed. All requirements for installation of CAT5 Ethernet cable must be observed for correct operation of the communicator, including, but not limited to, the following:

- Do NOT strip off cable sheathing more than required for proper termination.
- Do NOT kink/knot cable.
- Do NOT crush cable with cable ties.
- Do NOT untwist CAT5 pairs more than ½ in. (1.2cm).
- Do NOT splice cable.
- Do NOT bend cable at right angles or make any other sharp bends.

NOTE: CAT5 specification requires that any cable bend must have a minimum 2 in. (5 cm) bend radius. Maximum length of CAT 5 cable is 328 ft. (100 m).

Inserting and Removing the SIM Card

1. Remove the front cover of the panel to access SIM holder.
2. Remove power from the panel and disconnect the battery and telephone line.
3. On the SIM card holder push gently to slide the cover downwards to **OPEN**. This will unlatch the SIM card holder on the top edge of the communicator PCB. (See **Figure 3**).
4. Tilt the top of the SIM card holder downwards to access the SIM card.

NOTE: The SIM can be damaged by bending or scratching contacts. Use caution when handling SIM cards.

5. Insert or remove the SIM card, noting the orientation of the notches on the SIM card and the SIM card holder.
6. When inserting a SIM card, insert the card in the proper orientation and gently push the SIM card holder down and slide the holder as indicated by the arrow on SIM holder, to **LOCK**.
7. Reconnect the backup battery and telephone line, apply AC power to panel, and replace the panel cover.

Running the RS-422 Cable (R models only)

When installing the communicator for use with 3rd party applications an RS-422 cable must be connected between the 3rd party device and the communicator module.

NOTE: Maximum cable length for RS-422 cable is 1,000 ft. (305 m).

Please refer to the installation manual for the 3rd party device for wiring instructions.

Installing Communicator in Panel

Installing Communicator with HS2016, HS2032, HS2064, and HS2128 Panel

NOTE: Before installing communicator or inserting/removing SIM, ensure that system power is OFF and telephone line is disconnected.

1. To assemble supplied mounting bracket, perform the following: (See **Figure 1**).
   a. Remove the 4 white plastic standoffs from the bag provided with the communicator kit.
   b. Insert the 4 standoffs through the back of the mounting bracket, into the holes at each corner. (The antenna mounting tab should be facing away from you).
   c. Place the bracket on a flat, solid surface. Hold the communicator component side up and orient the 4 holes on the communicator with the 4 standoffs protruding from the

Figure 1:Communicator Mounting Bracket

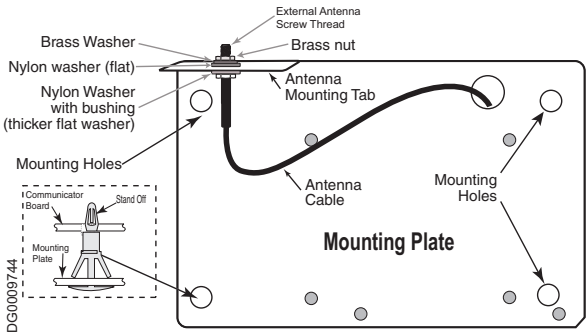

bracket. Push the communicator firmly and evenly onto the standoffs until it is securely attached to the mounting bracket.

d. Remove the panel front cover.

e. Remove and discard the circular knockout located in the top-right section of the panel. (This hole will be used for connection of the supplied radio antenna).

f. Connect the supplied 5” (12.7 cm) antenna cable to the radio, by passing the connector through the hole on back of the mounting bracket to the communicator board. Push the antenna connector firmly into the socket on the cellular radio. (See **Figure 3**).

2. Install the Communicator into the panel:

a. Attach one end of the PC-LINK cable to the panel PCLINK_2 header on the panel (red wire goes on the right-hand pin of the **panel** PCLINK_2 header (see **Figure 3**)).

b. Insert the assembled communicator into the panel.

NOTE: Ensure that the threaded antenna connection point is visible through the knockout hole at the top right of the panel.

c. Place the nylon washer with bushing (thick flat washer) onto the threaded section of the antenna cable. Insert the threaded section through the antenna mounting knockout hole at top right of panel.

d. Place the second nylon washer (flat), followed by the brass washer and the brass nut, onto the threaded section of the cable, **outside** the panel. Tighten the assembly by hand only (finger tight only- do not over tighten the antenna assembly).

e. Locate the screw hole on the right side wall of the panel. See **Figure 2** screw. Line up the assembled communicator with the right side wall of the panel and, using the screw provided, secure the mounting bracket to the panel.

f. Attach the other end of the PC-LINK cable to the communicator (red wire goes on the right-hand pin of the **communicator** PC-LINK header (See **Figure 3**)).

g. Using light pressure (finger tight only), attach the supplied white quad band whip antenna to the threaded antenna connection point at top of the panel.

Figure 2:HS2016/2032/2064/2128 Control Panel

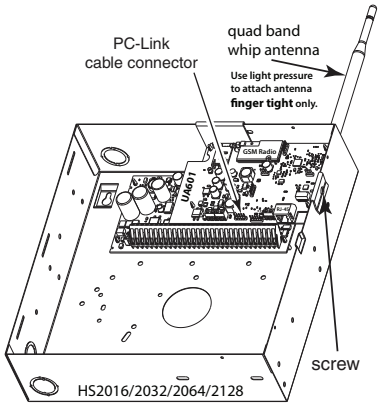

WARNING! - 3G2080(R)/TL2803G(R) modules are power limited. Do not route any wiring over the circuit board. Maintain at least 1in. (25.4mm) separation between circuit board and wiring. A minimum of ¼ in. (7mm) separation must be maintained at all points between non-power limited wiring and power limited wiring.

3. To electrically connect the communicator to the panel, perform the following steps (See **Figure 3).**

a. Disconnect both AC power and battery connections from the panel, and disconnect telephone line.

b. Confirm that the SIM card is inserted in the holder and locked.

4. Install Network Cable (TL2803G(R) only). Route the CAT 5 Ethernet cable through back of the panel and plug it into the communicator’s RJ45 jack.

NOTE: Before leaving the premises the Ethernet communication lines must first be connected to an approved (acceptable to local authorities) type NID, (UL installations, UL 60950 listed NID, for ULC installations CAN/CSA C22.2. No. 60950-1 certified NID). All wiring shall be performed according to the local electrical codes.

Figure 3:Communicator Wiring Diagram

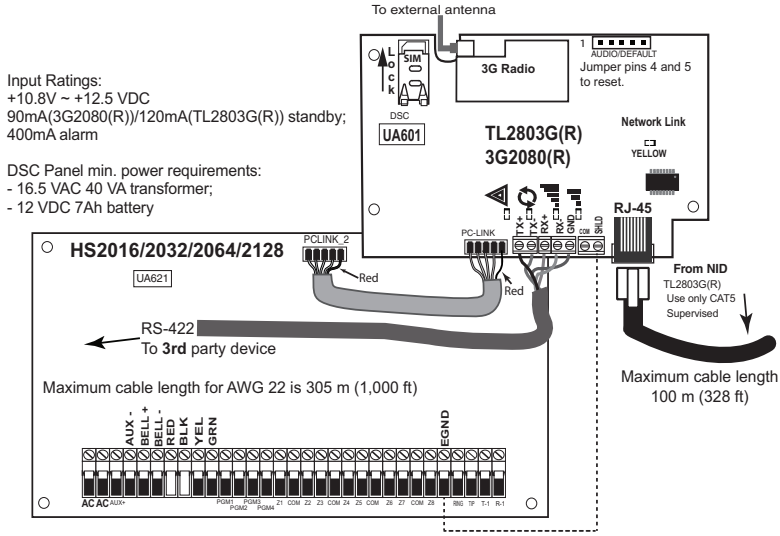

5. Install the RS-422 connections (R models only). If using the communicator with a 3rd party device, wire the connections as per the table below:

Table 3: RS-422 Connections

3rd Party Device	Communicator
TX+	RX+
TX-	RX-
RX+	TX+
RX-	TX-
GND (Optional)	GND

NOTE: The GND connection is optional. DSC recommends connecting GND wire at both ends.

6. Perform the following steps for initial power on of the panel with communicator installed:
   a. Reconnect the AC power, telephone line, and battery + connector to the panel. (The communicator and panel will power up together).
   b. Observe that the communicator's red and yellow LEDs are flashing together while it initializes. The red and yellow LEDs will continue to flash until the communicator has successfully communicated to all programmed receivers. If this is the first time the communicator has been powered up in the panel, the module will initiate communication to C24 Communications to request remote programming.

NOTE: During radio reset, the two green LEDs will flash alternately.

NOTE: Initialization may take several minutes to complete. Red and yellow LEDs will flash together during initialization. Do not continue to next step until the red and yellow LEDs have stopped flashing. (If only the yellow LED is flashing, there is a communicator trouble and the green LEDs are not valid for communicator placement test). Correct trouble indicated by flashes on yellow LED before continuing. (See Table 8 for troubleshooting assistance).

7. Perform the communicator placement test below.
8. Mount the panel in final location indicated by placement test.

Activating the Communicator with C24 Communications

Installation of the 3G2080(R) or TL2803G(R) requires activation with C24 Communications in order to operate. Please contact the central station (C24 Communications Master Reseller) to confirm the required steps to activate/program the communicator.

NOTE: The SIM activation with the carrier can take several hours to complete. It is recommended the activation be completed prior to arrival on the customer site to avoid possible installation delays.

Once the SIM activation is complete, the communicator will automatically connect and download its programming from C24 Communications.

COMMUNICATOR PLACEMENT TEST

3G2080(R) and TL2803G(R) only

To confirm that the cellular antenna location is suitable for radio operation, perform the placement test as follows:

NOTE: You may need to relocate the panel or install an optional extension antenna during this procedure, if radio signal strength is too low.

1. Confirm that the yellow LED on the communicator is not flashing. A flashing yellow LED indicates trouble on the communicator. See Table 8 to troubleshoot and correct the cause of this trouble before continuing to the next step.
2. Observe the strength of the radio signal on the yellow LED and the 2 green LEDs on the communicator meet or exceed the minimum signal level requirement. Minimum signal level: The yellow LED is **OFF** and the green LED 1 (furthest from the yellow LED) is **ON** (i.e., not flashing) for the panel location to be acceptable. For interpretation of receiver strength on LEDs, refer to the table **“Radio Signal Strength” on page 10**.

Cellular Signal Strength Display - LCD Keypad only

The cellular network signal strength can be checked on the keypad LCD screen by entering installer programming section [850]. The LCD will indicate the SIM card activation status followed by up to five bars of signal strength. This display will automatically update every three seconds. For the relationship between signal strength bars, CSQ level, and signal level in dBm, refer to **“Radio Signal Strength” on page 10.**

Table 4: Signal Strength Display

Description	Display
SIM card active and current signal strength	
SIM card inactive and current signal strength	
Radio not registered	OR AND — — — — —

NOTE: If the required signal strength is too low with the panel in its current location, the panel must be relocated or an external antenna is required.

If required, the following cellular extension antenna kits are available to the installer:

- GS-15ANTQ - 4.57m (15’) internal antenna extension kit *(*suitable for interior mounting*)*.
- GS-25ANTQ - 7.62m (25’) external antenna extension kit *(*suitable for interior/exterior mounting*)*.
- GS-50ANTQ - 15.24m(50’) external antenna extension kit *(*suitable for interior/exterior mounting*)*..

Specific instructions for the installation of the extension antenna are included with the kit. Observe all the electrical safety instructions regarding the installation of the antenna. All the wiring of the equipment shall be fully compliant with the local rules and regulations.

3. If required, install the antenna extension and perform the following steps to determine the best location for placement of the antenna:
   a. Disconnect the white whip antenna from the panel.
   b. Attach one end of the antenna extension cable to the threaded antenna connector on the panel and the other end to the external antenna.

4. Move the extension antenna to various locations while observing the two green LEDs on the panel.
   a. Continue to reposition the extension antenna until you receive an acceptable (minimum one green LED ON solid) signal strength.

NOTE: Minimum strength is: ▂▄▆ green LED 1 flashing and ⚠ yellow LED off. If green LED 1 is flashing, relocation should be considered.

   b. Mount the supplied antenna extension bracket at the location that provides the best signal strength.
5. Alternately, reposition the panel to improve signal strength. Dismount the panel and move it to another location to achieve the required signal strength. If the panel is relocated to improve signal strength, mount it in the new location.
6. When final panel/antenna location is determined, continue at the **Initial Panel Programming-**section.

NOTE: If the SIM card is not activated, placement test will indicate the signal strength of the nearest cellular tower.

NOTE: In between displaying signal strength, the signal strength LEDs will flash alternately if an inactive SIM card is used. The flashing indicates that the module is attempting to attach to the cellular network and will only last briefly.

INITIAL PANEL PROGRAMMING

ⓘ Domain Name Service (DNS) programming is not permitted in UL/ULC listed systems.

HS2016/2032/2064/2128 Initial Programming

For detailed information, refer to panel manual section ‘Alternate Communicator Set-up’.

1. In panel section [**377**] ‘Communication Variables’, subsection **[002]** ‘Communication Delays’, sub-subsection **[1]** ‘Communication Delay’, program **060** (seconds).
2. In panel section [**382**] ‘Communicator Option 3’ set option [**5**] ON.
3. In panel sections [300] subsections [001] to [004], program the subsection with 02 to 06.

Table 5: Communicator Path Programming

Value	Communication Method
02	Auto Routing
03	Ethernet 1
04	Ethernet 2
05	Cellular 1
06	Cellular 2

NOTE: Refer to panel manual for additional information

4. In panel section [350] ‘Communication Formats’, program the communication format as: CID (03) or SIA FSK (04).
5. In panel sections [311] - [318] ‘Partition Call Directions’, program the call direction options for the system.
6. In panel section [401] ‘DLS/SA Options’, set toggle option [2] ‘User Enable DLS’ to **ON** in order to perform panel DLS session through cellular or Ethernet.

NOTE: Before leaving the premises, the installer should verify all programmed communications paths. See programming options section [851][901] to send immediate test transmissions.

Communicator Troubles displayed on a HS2016/2032/2064/2128

The communication trouble is the only trouble that will appear on the keypad Liquid Crystal Display (LCD) when encountered by a communicator installed in a HS2016/2032/2064/2128. For

more information about the trouble on the communicator module refer to the panel event buffer or by accessing *2 to view the individual trouble types.

COMMUNICATOR STATUS LEDS

The communicator has 4 on-board LED indicators. These include 1 yellow trouble LED, 1 red network connection status LED, and 2 green signal strength LEDs. The LED meaning is described in this section.

⚠ Yellow Trouble LED

This yellow LED will flash to indicate a trouble on the unit. The number of flashes indicates the type of trouble. See the table below for the coded flashes and the conditions which will activate the trouble status LED.

Table 6: Yellow Trouble Status LED

# of Flashes	Trouble	# of Flashes	Trouble
2	Panel Supervision Trouble	8	Receiver Supervision Trouble
4	Not Applicable	9	FTC Trouble
5	Cellular Trouble	10	C24 Communications Configuration Failure
6	Ethernet Trouble	12	Module Configuration Trouble
7	Receiver Not Available Trouble		

NOTE: Only the highest priority trouble (2 flashes is the highest priority trouble) is indicated. When this trouble is restored, the next highest trouble will indicate, if present. This will continue until all troubles have been cleared (yellow LED is not flashing).

⚠ Red Network Connection Status LED

TL2803G(R)

BLINKING: Indicates communications in progress.

- Once quickly for outgoing Ethernet transmission.
- Twice quickly to indicate incoming Ethernet ACK/NACK.

OFF: This is the normal state of the red network connection status LED. There are no network connection issues present.

ON: There is a problem with the Ethernet or the cellular network connection. LED will be ON if any of the following occur: Ethernet cable is not connected, DHCP configuration times out, unit fails to get an IP address from the cellular network, or Cellular connection has been reset.

(Green LED 1) (Green LED 2) and ⚠ (Yellow LED) Signal Strength

NOTE: If the yellow LED is flashing, signal strength in table below is not valid. See **Table 8** for troubleshooting flashing yellow LED.

Table 7: Radio Signal Strength

Signal Strength	CSQ Level	Yellow LED	Green Led 2	Green LED 1	Signal Level dBm	Action Required
Radio Not Ready	N/A	N/A	Alternate Flashing	Alternate Flashing	N/A	If this status persists and the yellow LED shows 5 flashes, confirm that the SIM card is active.
No Signal	0	ON	OFF	OFF	-108.8	Check all antenna connections. Confirm cellular service is active in area. Relocate panel or install external antenna.
1 Bar	1 - 4	Flashing See Note	OFF	Flashing	-108 ~ -103	Relocate panel or install external antenna if yellow trouble LED has: **5 flashes**.
2 Bars	5 - 6	OFF	OFF	Flashing	-102 ~ -99	
3 Bars	7 - 10	OFF	OFF	ON	-98 ~ -91	**Location is OK**. Cellular signal strength is greater than CSQ 7.
4 Bars	11-13	OFF	Flashing	ON	-90 ~ -85	
5 Bars	14 +	OFF	ON	ON	-84 and higher	

NOTE: The communicator will indicate cellular trouble (yellow LED = 5 flashes) if the calculated average CSQ Level is 4 or less. The communicator signal strength can be viewed remotely with C24 Communications.

Network Activity LEDs - Red and Green(TL2803G(R) only)

- **Ethernet Activity:** Red LED will blink quickly once for transmit, or twice for receive.
- **Cellular Activity:** Green LED 2 will blink quickly once for transmit, or twice for receive

COMMUNICATOR TROUBLESHOOTING

Table 8: Trouble indications

Trouble indication	Trouble Indicator Digit	Possible Causes	Trouble Possible Solution
No Indication	N/A	No Power	• Check the power connections between the panel and the communicator. • Confirm PC-LINK cable is properly installed between communicator and panel.
Yellow LED – ON Solid	N/A	No Signal	• Confirm that cellular network service is active in your area. • Ensure the antenna is securely connected to the radio. Check antenna stub cable is securely connected to the radio. • If an external antenna is used, ensure the antenna is securely screwed on to the antenna cable connector. Check external antenna for damage or open/short.
Trouble LED – 2 Flashes	02	Panel Supervision Trouble	• Check section [382] toggle option[5] is ON (Alternate Communicator Enabled). • Ensure the PC-LINK cable between the panel and communicator is connected properly (not reversed) and is securely in place.
Yellow LED – 5 Flashes	05	Cellular Trouble	• Confirm that cellular service is available and active in your area. • Check all antenna connections. • Ensure average radio signal strength is CSQ 5 or higher. (See Table 7). • Ensure the SIM card is properly inserted into the SIM card holder. • Ensure the SIM card has been activated (could take up to 24 hrs after install). • If this trouble persists, you must relocate the panel (and communicator) or install an external antenna extension kit.
Yellow LED – 6 Flashes	06	Ethernet Trouble	• Check with your ISP to confirm Internet service is active in your area. • Ensure your Ethernet cable is securely inserted into the RJ45 jack of the communicator and the hub/router/switch. • Check the link light on the hub/router/switch is ON. If link light is OFF, start the hub/router/switch. • If DHCP is used, ensure that the unit has an assigned IP address from the server. In Section [851] [992] verify a valid IP address is programmed. If not, contact the network administrator. • If problem persists, replace the Ethernet cable and RJ45 connector.
Yellow LED – 7 Flashes	07	Receiver Not Available	• Ensure that the Ethernet path has Internet connectivity. • If using a static IP address, confirm that the gateway and subnet mask are entered correctly. • If the network has a firewall, ensure the network has the programmed outgoing ports open (default UDP port 3060 and port 3065). • Ensure that all the receivers are programmed for DHCP or have the proper IP address and port number. • Ensure the cellular receiver APNs have been programmed with the access point name provided by your cellular provider. • If Common Mode is used, and only one path is initialized while the other path is not successful, generate a manual test transmission over both paths or power cycle the communicator to recover the 'Receiver Not Available' trouble.
Yellow LED – 8 Flashes	08	Receiver Supervision Trouble	• This trouble is indicated when supervision is enabled and the unit is not able to successfully communicate with the receiver. • If this trouble persists, contact your central station.
Yellow LED - 9 Flashes	09	FTC Trouble	• The unit has exhausted all communications attempts to all programmed receivers for events generated by the communicator. • Restart the system, if trouble persists, contact your dealer.
Yellow LED – 10 Flashes	0A	C24 Communications Configuration Failure	• The SIM is active but there is no programming for the communicator. • Perform a default of the communicator. If trouble persists contact C24 Communications customer service.
Yellow LED – 12 Flashes	0C	Module Configuration Trouble	• This indication appears when section [021] system account code or sections [101]; [111]; [201]; and [211] receiver account code have not been programmed. Ensure that a valid account code has been entered in these sections.
All LEDs flashing together	N/A	Boot Loader Failed	• Disconnect power, then reconnect power to the communicator module.

Table 8: Trouble indications

Trouble indication	Trouble Indicator Digit	Possible Causes	Trouble Possible Solution
Red and Yellow LEDs flashing together	N/A	Initialization Sequence	• The unit is still initializing please wait while the unit gets its programming and establishes a connection to all programmed receivers. **Note: This process may take several minutes to complete.**
Only Green LEDs flashing	N/A	Hardware Default Jumper	• The hardware default jumper is installed and must be removed. See Figure 3.
Green LEDs alternating	N/A	Radio Reset or Radio Initialization	• If this status persists and the yellow LED shows 5 flashes, confirm that the SIM card is active.

ETHERNET/CELLULAR PROGRAMMING OPTIONS

The programming sections described in this document can be viewed at the keypad LCD. To start programming enter: **[*][8][installer code] [851] [section number]**, where section number is the 3 digit section number referenced in this section. The programming worksheets at the end of this document can be used to record the new values when programming changes have been made from the default values.

NOTE: Ethernet/cellular programming sections accessed through the panel are for **display purposes only**. Configuration changes must be done using C24 Communications.

ETHERNET/CELLULAR PROGRAMMING WORKSHEETS

System Options

[001] Ethernet IP Address

Default (000.000.000.000)

|___|___|___|___||___|___|___|___||___|___|___|___||___|___|___|___|

[002] Ethernet IP Subnet Mask

Default (255.255.255.000)

|___|___|___|___||___|___|___|___||___|___|___|___||___|___|___|___|

[003] Ethernet Gateway IP Address

Default (000.000.000.000)

|___|___|___|___||___|___|___|___||___|___|___|___||___|___|___|___|

[004] Receiver Supervision Interval

Default (0087/135) Valid range: 0000 - FFFF.

|___|___|___|___|

[005] System Toggle Options

|___| [1] Ethernet Receiver 1 Supervised Default (OFF).

|___| [2] Cellular Receiver 1 Supervised Default (OFF).

|___| [3] Supervision Type Default (OFF).

|___| [4] Primary Communications Path.
Default [OFF] TL2803G(R); [ON] 3G2080(R).

|___| [5] Redundant Communications Default (OFF).

|___| [6] Remote Firmware Upgrade Default (ON).

|___| [7] Alternate Test Transmission Default (OFF).

|___| [8] Cellular Low Signal Trouble Default (OFF).

[006] System Toggle Options 2

|___| [1] Ethernet Receiver 1 Enabled Default (ON).

|___| [2] Ethernet Receiver 2 Enabled Default (ON).

|___| [4] Cellular Receiver 1 Enabled Default (ON).

|___| [5] Cellular Receiver 2 Enabled Default (ON).

|___| [7] DLS Over Cellular Default (ON).

[007] DNS Server IP 1

Programming not permitted on UL/ULC listed system.

Default (000.000.000.000)

|___|___|___|___||___|___|___|___||___|___|___|___||___|___|___|___|

[008] DNS Server IP 2

Programming not permitted on UL/ULC listed system.

Default (000.000.000.000)

|___|___|___|___||___|___|___|___||___|___|___|___||___|___|___|___|

Programming Options

[010] System Toggle Options 3

|___| [1] Reserved

|___| [2] Visual Verification Default (OFF).

|___| [3] Reserved

[011] Installer Code

Default (CAFE) Valid range: 0000 - FFFF.

|___|___|___|___|

[012] DLS Incoming Port

Default (0BF6/3062) Valid range: 0000 - FFFF.

|___|___|___|___|

[013] DLS Outgoing Port

Default (0BFA/3066) Valid range: 0000 - FFFF.

|___|___|___|___|

[015] DLS Call-Up IP

Default (000.000.000.000)

|___|___|___|___||___|___|___|___||___|___|___|___||___|___|___|___|

[016] DLS Call-Up Port

Default (0000) Valid range: 0000 - FFFF.

|___|___|___|___|

[020] Time Zone

Default (00) Valid range: 00 - 99.

|___|___|___|___|

[021] Account Code

Default (FFFFFF) Valid range: 000001 - FFFFFE.

|___|___|___|___|___|___|

[022] Communications Format

Default (04) Program 03 (CID), 04 (SIA).

|___|___|

[023] Panel Absent Trouble

Default (FF); Program 00 disable or FF enable.

|___|___|

[024] Panel Absent Trouble Restore

Default (FF) Program 00 disable or FF enable.

|___|___|

[025] Radio Activation Restore

Default (FF) Program 00 disable or FF enable.

|___|___|

System Test Options

[026] Ethernet 1 Transmission

Default (FF) Program 00 disable or FF enable.

|___|___|

[027] Ethernet 2 Transmission

Default (00) Program 00 disable or FF enable.

|___|___|

[028] Cellular 1 Transmission

Default (FF) Program 00 disable or FF enable.

|___|___|

[029] Cellular 2 Transmission

Default (00) Program 00 disable or FF enable.

|___|___|

[030] FTC Restore

Default (FF) Program 00 disable or FF enable.

|___|___|

[033] Communicator Firmware Update Begin

Default (FF) Program 00 disable or FF enable.

|___|___|

[034] Communicator Firmware Update Successful

Default (FF) Program 00 disable or FF enable.

|___|___|

[035] Panel Firmware Update Begin

Default (FF) Program 00 disable or FF enable.

|___|___|

[036] Panel Firmware Update Successful

Default (FF) Program 00 disable or FF enable.

|___|___|

[037] Panel Firmware Update Fail

Default (FF) Program 00 disable or FF enable.

|___|___|

[095] SA Incoming Local Port

Default (0000) Valid range: 0000 - FFFF.

|___|___|___|___|

[096] SA Outgoing Local Port

Default (0000) Valid range: 0000 - FFFF.

|___|___|___|___|

[097] SA Call Up IP

Default (000.000.000.000)
|___|___|___|___|

[098] SA Call Up Port

Default (0000) Valid range: 0000 - FFFF.

|___|___|___|___|

[099] SA Password

Default (FFFFFFFF) Valid range: 00000000 - FFFFFFFF.

|___|___|___|___|___|___|___|___|

Ethernet Receiver 1 Options

[101] Ethernet Receiver 1 Account Code

Default (0000000000)
Valid range: 0000000001 - FFFFFFFFFE.

|___|___|___|___|___|___|___|___|___|___|

[102] Ethernet Receiver 1 DNIS

Default (000000) Valid range: 000000 - FFFFFF.

|___|___|___|___|___|___|

[103] Ethernet Receiver 1 Address

Default (127.000.000.001)

|___|___|___||___|___|___||___|___|___||___|___|___|

[104] Ethernet Receiver 1 UDP Remote Port

Default (0BF5/3061) Valid range: 0000 - FFFF.

|___|___|___|___|

[105] Ethernet Receiver 1 UDP Local Port

Default (0BF4/3060)Valid range: 0000 - FFFF.

|___|___|___|___|

[106] Ethernet Receiver 1 Domain Name

Default ( ) 32 ASCII characters.

Programming not permitted on UL/ULC listed system.

Ethernet Receiver 2 Options

[111] Ethernet Receiver 2 Account Code

Default (0000000000)
Valid range: 0000000001 - FFFFFFFFFE.

|___|___|___|___|___|___|___|___|___|___|

[112] Ethernet Receiver 2 DNIS

Default (000000) Valid range: 000000 - 0FFFFF.

|___|___|___|___|___|___|

[113] Ethernet Receiver 2 Address

Default (000.000.000.000)

|___|___|___|___|___|___|___|___|___|___|___|___|

[114] Ethernet Receiver 2 UDP Remote Port

Default (0BF5/3061) Valid range: 0000 - FFFF.

|___|___|___|___|

[115] Ethernet Receiver 2 UDP Local Port

Default (0BF9/3065) Valid range: 0000 -FFFF.

|___|___|___|___|

[116] Ethernet Receiver 2 Domain Name Default ( )

Programming not permitted on UL/ULC listed system.

Ethernet Options

[124] Ethernet Test Transmission Time

Default (9999) Valid: 00-23(HH); 00-59(MM)

|___|___|___|___|

[125] Ethernet Test Transmission Cycle

Default (000000)
Valid range: 000000 - 999999 minutes.

|___|___|___|___|___|___|

Cellular Receiver 1 Options

[201] Cellular Receiver 1 Account Code

Default (0000000000)
Valid range: 0000000001 - FFFFFFFFFE.

|___|___|___|___|___|___|___|___|___|___|

[202] Cellular Receiver 1 DNIS

Default (000000) Valid range: 000000 - 0FFFFF.

|___|___|___|___|___|___|

[203] Cellular Receiver 1 Address

Default (000.000.000.000). Valid range: 000-255.

|___|___|___|___|___|___|___|___|___|___|___|___|

[204] Cellular Receiver 1 Port

Default (0BF5/3061) Valid range: 0000 - FFFF.

|___|___|___|___|

[205] Cellular Receiver 1 APN Default ( )

32 ASCII characters.

---

[206] Cellular Receiver 1 Domain Name

Default ( )

Programming not permitted on UL/ULC listed system.

32 Character ASCII characters.

Cellular Receiver 2 Options

[211] Cellular Receiver 2 Account Code

Default (0000000000)
Valid range: 0000000001 - FFFFFFFFFE.

|___|___|___|___|___|___|___|___|___|___|

[212] Cellular Receiver 2 DNIS

Default (000000)
Valid range: 000000 - 0FFFFF.

|___|___|___|___|___|___|

[213] Cellular Receiver 2 Address

Default (000.000.000.000)
Valid segment range: 000-255

|___|___|___|___|___|___|___|___|___|___|___|___|

[214] Cellular Receiver 2 Port

Default (0BF5/3061) Valid range: 0000 - FFFF.

|___|___|___|___|

[215] Cellular Receiver 2 APN

Default ( ) 32 ASCII characters.

---

[216] Cellular Receiver 2 Domain Name

Default ( )

Programming not permitted on UL/ULC listed system.

32 ASCII characters.

Cellular Options

[221] Cellular Public Access Point Name

Default ( ) 32 ASCII characters

---

[222] Cellular Login User Name

Default ( ) 32 ASCII characters.

_____

[223] Cellular Login Password

Default ( ) 32 ASCII characters.

_____

[224] Cellular Test Transmission Time of Day

Default (9999) Valid range: 00 - 23 hrs. (HH) 00 - 59 min. (MM).

|___|___|___|___|

[225] Cellular Test Transmission Cycle

Default (000000)

Valid range: 000000 - 999999 minutes.

|___|___|___|___|___|___|

[226] Cellular Trouble Delay

Default (10)

Valid entries from, 00 to FF.

|___|___|

Command and Control Options

[301] Command and Control Toggle Options

|____| [1] Reserved

|____| [2] Reserved

|____| [3] SMS Command and Control Default (ON).

|____| [4] Reserved

|____| [5] SMS Character Format

|____| [6] Long SMS Message Handling Default (OFF).

|____| [7] Reserved

|____| [8] Reserved

[311] SMS Phone Number 1

_____

[312] SMS Phone Number 2

_____

[313] SMS Phone Number 3

_____

[314] SMS Phone Number 4

_____

[315] SMS Phone Number 5

_____

[316] SMS Phone Number 6

_____

[317] SMS Phone Number 7

_____

[318] SMS Phone Number 8

_____

[319] SMS Phone Number 9

_____

[320] SMS Phone Number 10

_____

[321] SMS Phone Number 11

_____

[322] SMS Phone Number 12

_____

[323] SMS Phone Number 13

_____

[324] SMS Phone Number 14

_____

[325] SMS Phone Number 15

_____

[326] SMS Phone Number 16

_____

[327] SMS Phone Number 17

_____

[328] SMS Phone Number 18

_____

[329] SMS Phone Number 19

_____

[330] SMS Phone Number 20

_____

[331] SMS Phone Number 21

_____

[332] SMS Phone Number 22

_____

[333] SMS Phone Number 23

_____

[334] SMS Phone Number 24

_____

[335] SMS Phone Number 25

_____

[336] SMS Phone Number 26

_____

[337] SMS Phone Number 27

_____

[338] SMS Phone Number 28

_____

[339] SMS Phone Number 29

_____

[340] SMS Phone Number 30

_____

[341] SMS Phone Number 31

_____

[342] SMS Phone Number 32

_____

[343]-[374] SMS Phone Number 1-32 Toggle Options

|___| [1] Reserved

|___| [2] Reserved

|___| [3] Reserved

|___| [4] Reserved

|___| [5] Reserved

|___| [6] Reserved

|___| [7] Reserved

|___| [8] SMS Command and Control Enabled Default (ON).

[375]-[406] SMS Phone Number 1-32 Partition Assignments Partition Assignments

Default (00) Valid range: 00 - FF.

00 - Global; 01-32 - Partition; FF - Disabled

|___|___|

Receiver Diagnostic Testing

[901] Diagnostic Test Transmission

|___| [1] Ethernet 1 Default (OFF).

|___| [2] Ethernet 2 Default (OFF).

|___| [3] Cellular 1 Default (OFF).

|___| [4] Cellular 2 Default (OFF).

System Information (Read Only)

[983] Firmware Update Diagnostics Section

[984] Communicator Status

[985] Radio Initialization Status

[987] Language Version

|___|___|

[988] DNS 1 IP Address

|___|___|___|___|___|___|___|___|___|___|___|___|

[989] DNS 2 IP Address

|___|___|___|___|___|___|___|___|___|___|___|___|

[990] Boot Loader Version

|___|___|___|___|___|___|___|___|

[991] Firmware Version

|___|___|___|___|___|___|___|___|

[992] Ethernet IP Address

|___|___|___|___|___|___|___|___|___|___|___|___|

[993] Ethernet Gateway Address

|___|___|___|___|___|___|___|___|___|___|___|___|

[994] Cellular IP Address

|___|___|___|___|___|___|___|___|___|___|___|___|

[995] SIM Number

_____

[996] Cellular Telephone Number

This number is required for DLS and Firmware upgrades.

_____

[997] IMEI Number

_____

[998] MAC Address

|__|__|__|__|__|__|__|__|__|__|__|__|

System Reset Defaults

[999] Software Default

Default (99); Valid entries are 00 or 55

|___|___|

FCC Compliance Statement

CAUTION: Changes or modifications not expressly approved by the Digital Security Controls could void your authority to use this equipment.

This equipment has been tested and found to comply with the limits for a Class B digital device, pursuant to Part 15 of the FCC Rules. These limits are designed to provide reasonable protection against harmful interference in a residential installation. This equipment generates, uses and can radiate radio frequency energy and, if not installed and used in accordance with the instructions, may cause harmful interference to radio communications. However, there is no guarantee that interference will not occur in a particular installation. If this equipment does cause harmful interference to radio or television reception, which can be determined by turning the equipment off and on, the user is encouraged to try to correct the interference by one or more of the following measures:

- Re-orient the receiving antenna.
- Increase the separation between the equipment and receiver.
- Connect the equipment into an outlet on a circuit different from that to which the receiver is connected.
- Consult the dealer or an experienced radio/television technician for help.

The user may find the following booklet prepared by the FCC useful: 'How to Identify and Resolve Radio/Television Interference Problems'. This booklet is available from the U.S. Government Printing Office, Washington D.C. 20402, Stock # 004-000-00345-4.

Warning: To satisfy FCC RF exposure requirements for mobile transmitting devices, a separation distance of 20cm or more must be maintained between the antenna of this device and persons during device operation.

Industry Canada Statement

The prefix 'IC:' in front of the radio certification number signifies only that Industry Canada technical specifications were met. Certification Number IC: 160A-3G260R

This device complies with Industry Canada licence-exempt RSS standard(s). Operation is subject to the following tow conditions: (1) this device may not cause interference, and (2) this device must accept any interference, including interference that may cause undesired operation of the device.

Cet appareil est conforme avec Industrie Canada exempts de licence standard RSS (s). Le fonctionnement est soumis aux deux conditions suivantes: (1) cet appareil ne peut pas provoquer d'interférences et (2) cet appareil doit accepter toute interférence, y compris les interferences qui peuvent causer un mauvais fonctionnement de l'appareil.

This Class B digital apparatus complies with Canadian ICES-003.

Cet appareil numérique de la classe B est conforme à la norme NMB-003 du Canada.

End User Licence Agreement

IMPORTANT - READ CAREFULLY: DSC Software purchased with or without Products and Components is Copyrighted and is purchased under the following license terms:

This End-User License Agreement (EULA) is a legal agreement between **You** (the company, individual or entity who acquired the SOFTWARE and any related HARDWARE) and **Digital Security Controls (DSC),** a division of Tyco Safety Products Canada Ltd., the manufacturer of the integrated security systems and the developer of the software and any related products or components ('HARDWARE') which you acquired.

If the DSC software product ('SOFTWARE PRODUCT' or 'SOFTWARE') is intended to be accompanied by HARDWARE, and is NOT accompanied by new HARDWARE, You may not use, copy or install the SOFTWARE PRODUCT. The SOFTWARE PRODUCT includes computer software, and may include associated media, printed materials, and 'online' or electronic documentation.

Any software provided along with the SOFTWARE PRODUCT that is associated with a separate EULA is licensed to You under the terms of that license agreement.

By installing, copying, downloading, storing, accessing, or otherwise using the SOFTWARE PRODUCT, You agree unconditionally to be bound by the terms of this EULA, even if this EULA is deemed to be a modification of any previous arrangement or contract. If You do not agree to the terms of this EULA, DSC is unwilling to license the SOFTWARE PRODUCT to You, and You have no right to use it.

SOFTWARE PRODUCT LICENSE

The SOFTWARE PRODUCT is protected by copyright laws and international copyright treaties, as well as other intellectual property laws and treaties. The SOFTWARE PRODUCT is licensed, not sold, under the following terms:.

GRANT OF LICENSE This EULA grants You the following rights:

Software Installation and Use - For each license You acquire, You may have only one copy of the SOFTWARE PRODUCT installed.

Storage/Network Use - The SOFTWARE PRODUCT may not be installed, accessed, displayed, run, shared or used concurrently on or from different computers, including a workstation, terminal or other digital electronic device ('Device'). In other words, if You have several workstations, You will have to acquire a license for each workstation where the SOFTWARE will be used.

Backup Copy - You may make back-up copies of the SOFTWARE PRODUCT, but You may only have one copy per license installed at any given time. You may use the back-up copy solely for archival purposes. Except as expressly provided in this EULA, You may not otherwise make copies of the SOFTWARE PRODUCT, including the printed materials accompanying the SOFTWARE.

DESCRIPTION OF OTHER RIGHTS AND LIMITATIONS

Limitations on Reverse Engineering, Decompilation and Disassembly - You may not reverse engineer, decompile, or disassemble the SOFTWARE PRODUCT, except and only to the extent that such activity is expressly permitted by applicable law notwithstanding this limitation. You may not make any changes or modifications to the Software, without the written permission of an officer of DSC. You may not remove any proprietary notices, marks or labels from the Software Product. You shall institute reasonable measures to ensure compliance with the terms and conditions of this EULA.

Separation of Components - The SOFTWARE PRODUCT is licensed as a single product. Its component parts may not be separated for use on more than one HARDWARE unit.

Single INTEGRATED PRODUCT - If You acquired this SOFTWARE with HARDWARE, then the SOFTWARE PRODUCT is licensed with the HARDWARE as a single integrated product. In this case, the SOFTWARE PRODUCT may only be used with the HARDWARE as set forth in this EULA.

Rental - You may not rent, lease or lend the SOFTWARE PRODUCT. You may not make it available to others or post it on a server or web site.

Software Product Transfer - You may transfer all of Your rights under this EULA only as part of a permanent sale or transfer of the HARDWARE, provided You retain no copies, You transfer all of the SOFTWARE PRODUCT (including all component parts, the media and printed materials, any upgrades and this EULA), and provided the recipient agrees to the terms of this EULA. If the SOFTWARE PRODUCT is an upgrade, any transfer must also include all prior versions of the SOFTWARE PRODUCT.

Termination - Without prejudice to any other rights, DSC may terminate this EULA if You fail to comply with the terms and conditions of this EULA. In such event, You must destroy all copies of the SOFTWARE PRODUCT and all of its component parts.

Trademarks - This EULA does not grant You any rights in connection with any trademarks or service marks of DSC or its suppliers.

COPYRIGHT - All title and intellectual property rights in and to the SOFTWARE PRODUCT (including but not limited to any images, photographs, and text incorporated into the SOFTWARE PRODUCT), the accompanying printed materials, and any copies of the SOFTWARE PRODUCT, are owned by DSC or its suppliers. You may not copy the printed materials accompanying the SOFTWARE PRODUCT. All title and intellectual property rights in and to the content which may be accessed through use of the SOFTWARE PRODUCT are the property of the respective content owner and may be protected by applicable copyright or other intellectual property laws and treaties. This EULA grants You no rights to use such content. All rights not expressly granted under this EULA are reserved by DSC and its suppliers.

EXPORT RESTRICTIONS - You agree that You will not export or reexport the SOFTWARE PRODUCT to any country, person, or entity subject to Canadian export restrictions.

CHOICE OF LAW - This Software License Agreement is governed by the laws of the Province of Ontario, Canada.

ARBITRATION - All disputes arising in connection with this Agreement shall be determined by final and binding arbitration in accordance with the Arbitration Act, and the parties agree to be bound by the arbitrator's decision. The place of arbitration shall be Toronto, Canada, and the language of the arbitration shall be English.

7. LIMITED WARRANTY

NO WARRANTY - DSC provides the SOFTWARE 'as is' without warranty. DSC does not warrant that the SOFTWARE will meet your requirements or that operation of the SOFTWARE will be uninterrupted or error free.

CHANGES IN OPERATING ENVIRONMENT - DSC shall not be responsible for problems caused by changes in the operating characteristics of the hardware, or for problems in the interaction of the SOFTWARE with non DSC software or hardware products.

LIMITATION OF LIABILITY; WARRANTY REFLECTS ALLOCATION OF RISK -In any event, if any statute implies warranties or conditions not stated in this license agreement, entire liability under any provision of this license agreement shall be limited to the greater of the amount actually paid by you to license the SOFTWARE and five Canadian dollars (CAD$5.00). because some jurisdictions do not allow the exclusion or limitation of liability for consequential or incidental damages, the above limitation may not apply to you.

DISCLAIMER OF WARRANTIES - This warranty contains the entire warranty and shall be in lieu of any and all other warranties, whether expressed or implied (including all implied warranties of merchantability or fitness for a particular purpose) and of all other obligations or liabilities on the part of DSC. DSC makes no other warranties. DSC neither assumes nor authorizes any other person purporting to act on its behalf to modify or to change this warranty, nor to assume for it any other warranty or liability concerning this SOFTWARE PRODUCT.

EXCLUSIVE REMEDY AND LIMITATION OF WARRANTY - Under no circumstances shall DSC be liable for any special, incidental, consequential or indirect damages based upon breach of warranty, breach of contract, negligence, strict liability, or any other legal theory. such damages include, but are not limited to, loss of profits, loss of the SOFTWARE or any associated equipment, cost of capital, cost of substitute or replacement equipment, facilities or services, down time, purchasers time, the claims of third parties, including customers, and injury to property.

DSC recommends that the entire system be completely tested on a regular basis. However, despite frequent testing, and due to, but not limited to, criminal tampering or electrical disruption, it is possible for this Software Product to fail to perform as expected.

LIMITED WARRANTY

Digital Security Controls (DSC) warrants the original purchaser that for a period of twelve (12) months from the date of purchase, the product shall be free of defects in materials and workmanship under normal use. During the warranty period, Digital Security Controls shall, at its option, repair or replace any defective product upon return of the product to its factory, at no charge for labour and materials. Any replacement and/or repaired parts are warranted for the remainder of the original warranty or ninety (90) days, whichever is longer. The original purchaser must promptly notify Digital Security Controls in writing that there is defect in material or workmanship, such written notice to be received in all events prior to expiration of the warranty period. There is absolutely no warranty on software and all software products are sold as a user license under the terms of the software license agreement included with the product. The Customer assumes all responsibility for the proper selection, installation, operation and maintenance of any products purchased from DSC. Custom products are only warranted to the extent that they do not function upon delivery. In such cases, DSC can replace or credit at its option.

International Warranty

The warranty for international customers is the same as for any customer within Canada and the United States, with the exception that Digital Security Controls shall not be responsible for any customs fees, taxes, or VAT that may be due.

Warranty Procedure

To obtain service under this warranty, please return the item(s) in question to the point of purchase. All authorized distributors and dealers have a warranty program. Anyone returning goods to Digital Security Controls must first obtain an authorization number. Digital Security Controls will not accept any shipment whatsoever for which prior authorization has not been obtained.

Conditions to Void Warranty

This warranty applies only to defects in parts and workmanship relating to normal use. It does not cover:

- damage incurred in shipping or handling;
- damage caused by disaster such as fire, flood, wind, earthquake or lightning;
- damage due to causes beyond the control of Digital Security Controls such as excessive voltage, mechanical shock or water damage;
- damage caused by unauthorized attachment, alterations, modifications, or foreign objects;
- damage caused by peripherals (unless such peripherals were supplied by Digital Security Controls);
- defects caused by failure to provide a suitable installation environment for the products;
- damage caused by use of the products for purposes other than those for which it was designed;
- damage from improper maintenance; or
- damage arising out of any other abuse, mishandling or improper application of the products.

Items Not Covered by Warranty

In addition to the items which void the Warranty, the following items shall not be covered by Warranty: freight cost to the repair centre; products which are not identified with DSC's product label and lot number or serial number; or products disassembled or repaired in such a manner as to adversely affect performance or prevent adequate inspection or testing to verify any warranty claim.

Access cards or tags returned for replacement under warranty will be credited or replaced at DSC's option. Products not covered by this warranty, or otherwise out of warranty due to age, misuse, or damage shall be evaluated, and a repair estimate shall be provided. No repair work will be performed until a valid purchase order is received from the Customer and a Return Merchandise Authorisation number (RMA) is issued by DSC's Customer Service.

Digital Security Controls' liability for failure to repair the product under this warranty after a reasonable number of attempts will be limited to a replacement of the product, as the exclusive remedy for breach of warranty. Under no circumstances shall Digital Security Controls be liable for any special, incidental, or consequential damages based upon breach of warranty, breach of contract, negligence, strict liability, or any other legal theory. Such damages include, but are not limited to, loss of profits, loss of the product or any associated equipment, cost of capital, cost of substitute or replacement equipment, facilities or services, down time, purchaser's time, the claims of third parties, including customers, and injury to property. The laws of some jurisdictions limit or do not allow the disclaimer of consequential damages. If the laws of such a jurisdiction apply to any claim by or against DSC, the limitations and disclaimers contained here shall be to the greatest extent permitted by law. Some states do not allow the exclusion or limitation of incidental or consequential damages, so that the above may not apply to you.

Disclaimer of Warranties

This warranty contains the entire warranty and shall be in lieu of any and all other warranties, whether expressed or implied (including all implied warranties of merchantability or fitness for a particular purpose) and of all other obligations or liabilities on the part of Digital Security Controls Digital Security Controls neither assumes responsibility for nor authorizes any other person purporting to act on its behalf to modify or to change this warranty, nor to assume for it any other warranty or liability concerning this product. This disclaimer of warranties and limited warranty are governed by the laws of the province of Ontario, Canada. Digital Security Controls recommends that the entire system be completely tested on a regular basis. However, despite frequent testing, and due to, but not limited to, criminal tampering or electrical disruption, it is possible for this product to fail to perform as expected.

Out of Warranty Repairs

Digital Security Controls will at its option repair or replace out-of-warranty products which are returned to its factory according to the following conditions. Anyone returning goods to Digital Security Controls must first obtain an authorization number. Digital Security Controls will not accept any shipment whatsoever for which prior authorization has not been obtained. Products which Digital Security Controls determines to be repairable will be repaired and returned. A set fee which Digital Security Controls has predetermined and which may be revised from time to time, will be charged for each unit repaired.

29008730R001

© 2014 Tyco International Ltd. and its Respective Companies. All Rights Reserved.
Toronto, Canada • **www.dsc.com**
Tech Support: 1-800-387-3630 (CA, US), 905-760-3000

A Tyco International Company