SPECTRA®

Reference & Installation Manual
Spectra Control Panels
1728: V2.4
1738: V2.1

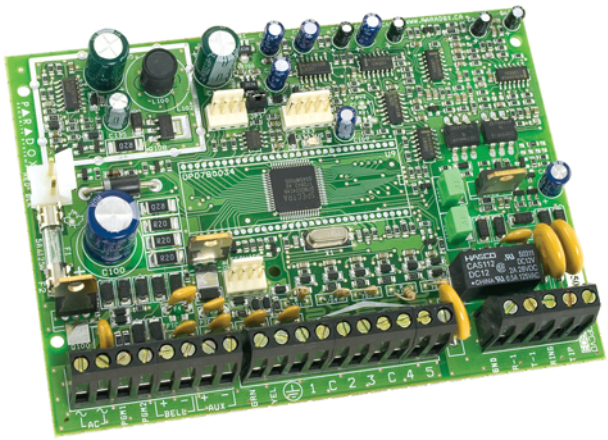

1728

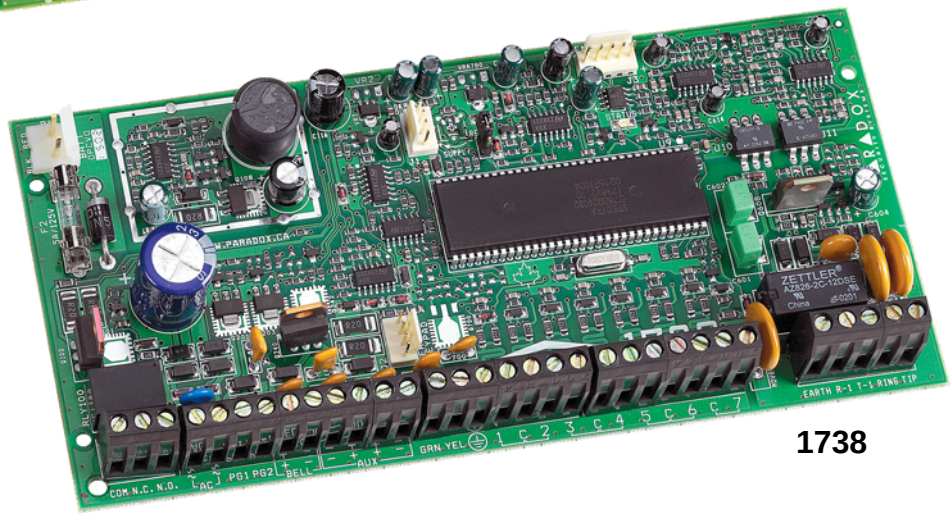

1738

PARADOX®
SECURITY SYSTEMS

Table of Contents

Introduction 1
Features 1
Specifications 1

Installation 2
Location and Mounting 2
Earth Ground 3
AC Power 4
Backup Battery 4
Auxiliary Power Terminals 4
Telephone Line Connection 4
Bell Output Connection 5
Programmable Output Connections 5
Single Zone Inputs 6
Double Zone Inputs (with ATZ Option only) 6
Keypad and Keypad Zone Connections 7
Keyswitch Connections 7
Fire Circuits 7

Programming Methods 8
WinLoad Software for Windows 8
Programming Using a Keypad 8
Configuring the LED Keypads 9
Programming Using A Paradox Memory Key 10

Access Codes 10
Access Code Length 11
Installer Code (Default: 000000 or 0000) 11
System Master Code (Default: 123456 or 1234) 11
User Code Options 11
Lock Master Code 12
Duress Code 12

Zone Programming 13
What is an Expansion Input? 14
Reassign Keypad Zone 2 14
Reassign Zones to Expansion Inputs (1728 only) 14
Zone Programming 15
Zone Definitions 16
Exclusive Zone Definitions 16
Programming a Wireless Fire Zone 17
Zone Partition Assignment 18
Zone Options 18
Zone Speed 20
EOL Zones 20
ATZ - Zone Doubling 20
ATZ Wiring Options (1728 only) 21
Zone 1 Becomes 2-wire Smoke Input (1738 only) 21

Arming and Disarming Options 22
Switch To Stay Arming 22
Stay Arming with Delay 22
Regular Arming switches to Force Arming 22
Restrict Arming On Battery Fail 22
Restrict Arming On Tamper Failure 22
Timed Auto-Arming 23
No Movement Auto-Arming 23
Auto-Arming Options 23
One-Touch Arming 24
Exit Delay 24
Bell Squawk On Arm/Disarm With Keypad 24
Bell Squawk On Arm/disarm with Remote Control 24
No Exit Delay When Arming with Remote Control 24
No Exit Delay Beeps and No Bell Squawk
When Stay Arming 24

Alarm Options 25
Bell Cut-Off Timer 25
Recycle Alarm 25
Tamper Recognition 25
Keypad Panic Options 26
Panic Lockout Timer 26

Reporting and Dialer settings 27
Reporting/Dialer (Enable/Disable) 28
Report Codes 28
Monitoring Station Telephone Numbers 30
Partition Account Numbers 31
Reporting Formats 31
Pager Format Transmission Options
(1728 V2.40 and higher) 32
Pager Delay 32
Event Call Direction 32
Dialing Method 33
Pulse Ratio 33
Bell on Communication Failure 33
Dial Tone Delay 33
Maximum Dialing Attempts 33
Delay Between Dialing Attempts 34
Alternate Dial Option 34
Recent Close Delay 34
Auto Test Report 34
Closing Delinquency Timer (1728 V2.40 and higher) 34
Power Failure Report Delay 34
Disarm Reporting Options 35
Zone Restore Report Options 35
Telephone Line Monitoring (TLM) 35

Programmable Outputs 35
PGM Activation Event 36
PGM Deactivation Event 36
PGM Delay 36
PGM Normal State 36
PGM2 Strobe Options 37
Alarm Relay Options (1738 Only) 37

System Settings 37
Hardware Reset 37
Installer Lock 37
Keypad Lockout Feature 37
Battery Charge Current (1738 only) 38
Partitioning 38
System Real-Time Clock 38
Clock Adjust 38
Keypad Tamper Supervision 38
Keypad Audible Trouble Warning 39
Confidential Mode 39
Installer Quick Functions Keys 39
4-Output Bus Module* Supervision 40

Printer Bus Module Supervision..... 40
Zone Expansion Bus Module* Supervision..... 40
Wireless Bus Module Supervision 41
Wireless Transmitter Low Battery Supervision 41
Wireless Transmitter Supervision Options..... 41
Reprogram All Expansion Modules..... 42

Settings for WinLoad Software 42
Panel Answer Options 42
Panel Identifier..... 42
PC Password 43
PC Telephone Number 43
Call WinLoad Software 43
Answer WinLoad Software..... 43
Auto Event Buffer Transmission 43
Call Back WinLoad..... 43

User Operation..... 44
Trouble Display..... 44
Programming Access Codes 45
Disarming & Deactivating an Alarm 46
Regular Arming..... 46
Stay Arming 46
Instant Arming..... 46
Force Arming 47
Manual Bypass Programming..... 47
One-Touch Arming..... 47
Keyswitch Arming 48
Panic Alarms..... 48
Auto-Arming..... 48
Alarm Memory Display..... 48
Programming Chime Zones..... 48
Keypad Muting..... 49
Keypad Backlight (1686H and 1686V only) 49

FCC Warnings..... 50

Index 52

List of Tables

Transformer Requirements Table 4
Current Consumption Table 4
Decimal and Hexadecimal Programming Table 8
Zone Recognition Table for 1728 13
Zone Recognition Table for 1738 14
Special Keys for Telephone Numbers 31
Reporting Formats 31
Zone Tamper Report Code for Keypad
Tamper Supervision Failure 39
Trouble List 44

Part 1: Introduction

1.1 Features

- Up to 16 fully programmable zones
- Two completely independent partitions. Many of the features and options in the Spectra system can be independently set for each partition such as event reporting, entry/exit delay, auto-arming and many more. All zones, the keyswitches and all user codes are assigned to specific partitions, which makes this a true partitioned system.
- Communication bus facilitates the adding, programming and monitoring of all expansion modules.
- 1 Installer Code and 48 User Codes (including: 1 System Master, 2 Masters, and 1 Duress)
- 1738: 2 on-board, fully programmable outputs (PGMs) and 1 optional 5A alarm relay
- 1728: 2 on-board, fully programmable outputs (PGMs)
- Simple, direct and logical programming
- Event Call Direction: the Spectra series control panel events are divided into 5 groups of events. Each of these event groups can be programmed with a separate dialing sequence.
- Two 32-digit Monitoring Station Telephone Numbers and one 32-digit Backup Telephone Number
- Contact ID, Pager Format and many more High-Speed Communication Formats
- "False Alarm Prevention" features such as: Intellizone, Auto Zone Shutdown, Beep on Exit Delay, Programmable Delay Before Alarm Transmission, and Recent Closing Report
- Regular Arming, Stay Arming, Instant Arming, Force Arming, One-Touch Arming, Auto-Arming, or Keyswitch Arming
- 256 Event Buffer with time stamp
- Telephone Line Supervision
- Keypad activated panic alarms
- Compatible with WinLoad Security System Management Software for Windows®

1.2 Specifications

1.2.1 Spectra Control Panels

- AC Power:* — 16Vac transformer with minimum 20VA rating (Rec.: 40VA), 50 to 60Hz
- Battery: — 12Vdc, 4Ah/7Ah
- Aux. Power:+ — 600mA typical, 700mA maximum, fuseless shutdown @ 1.1A
- Bell Output:++ — 1A, fuseless shutdown @ 3A
- PGM Outputs: — 1728: PGM1 and PGM2 = 150mA
  1738: PGM1 and PGM2 = 1A
- Alarm Relay: — One form “C” relay rated @ 125V, 5A receptive load (1738 only)

1.2.2 Spectra Keypads (1686H, 1686V, 1689 & 1641)

- Power input: — 9-16Vdc,
- 1 standard keypad zone
- On-board Tamper Switch (optional)

1686H & 1686V 10-Zone LED Keypad

- Current Consumption: — 62 to 116mA

1689 16-Zone LED Keypad

- Current Consumption: — 50 to 117mA

1641 32-Character LCD Keypad

- Current Consumption: — 60 to 80mA
- PGM: — 1 with 50mA current limit
- LCD: — Super Twisted Nematic display (STN), Wide viewing angle, Backlight & Contrast adjustable

* Only the 16.5Vac, 40VA version is UL listed.
+ 200mA typical for UL installations
++1A for UL installations total, including PGM options

2.1 Location and Mounting

Before mounting the cabinet, push the five white nylon mounting studs into the back of the cabinet. Pull all cables into the cabinet and prepare them for connection before mounting the circuit board into the back of the cabinet. Select an installation site that isn't easily accessible to intruders and leave at least 5cm (2in) around the panel box to permit adequate ventilation and heat dissipation. The installation site should be dry and close to an AC source, ground connection and telephone line connection.

Figure 1: Spectra 1738 Control Panel Overview

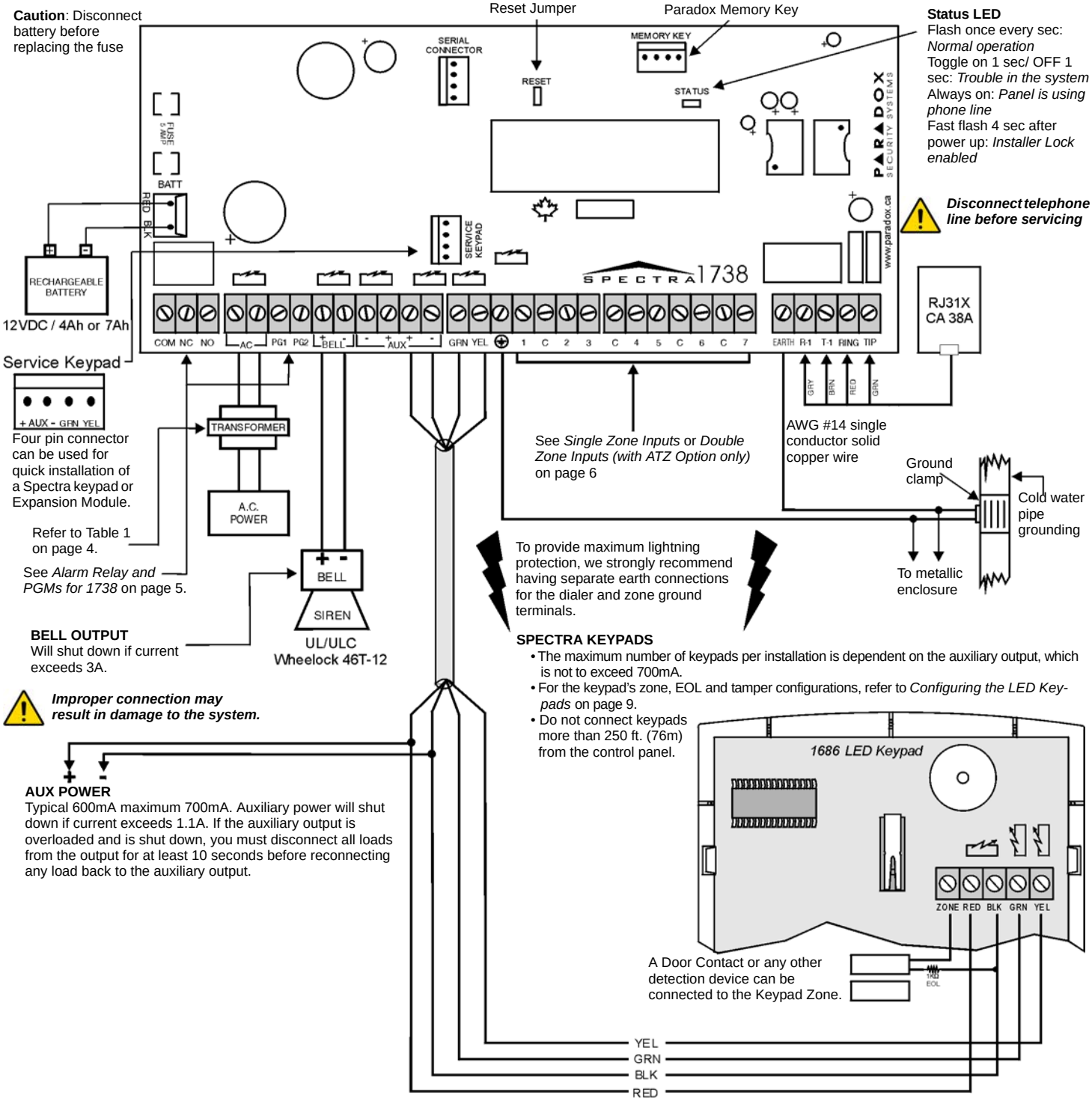

For UL Listed warnings, refer to **UL and ULC Warnings** on page 51.

Figure 2: Spectra 1728 Control Panel Overview

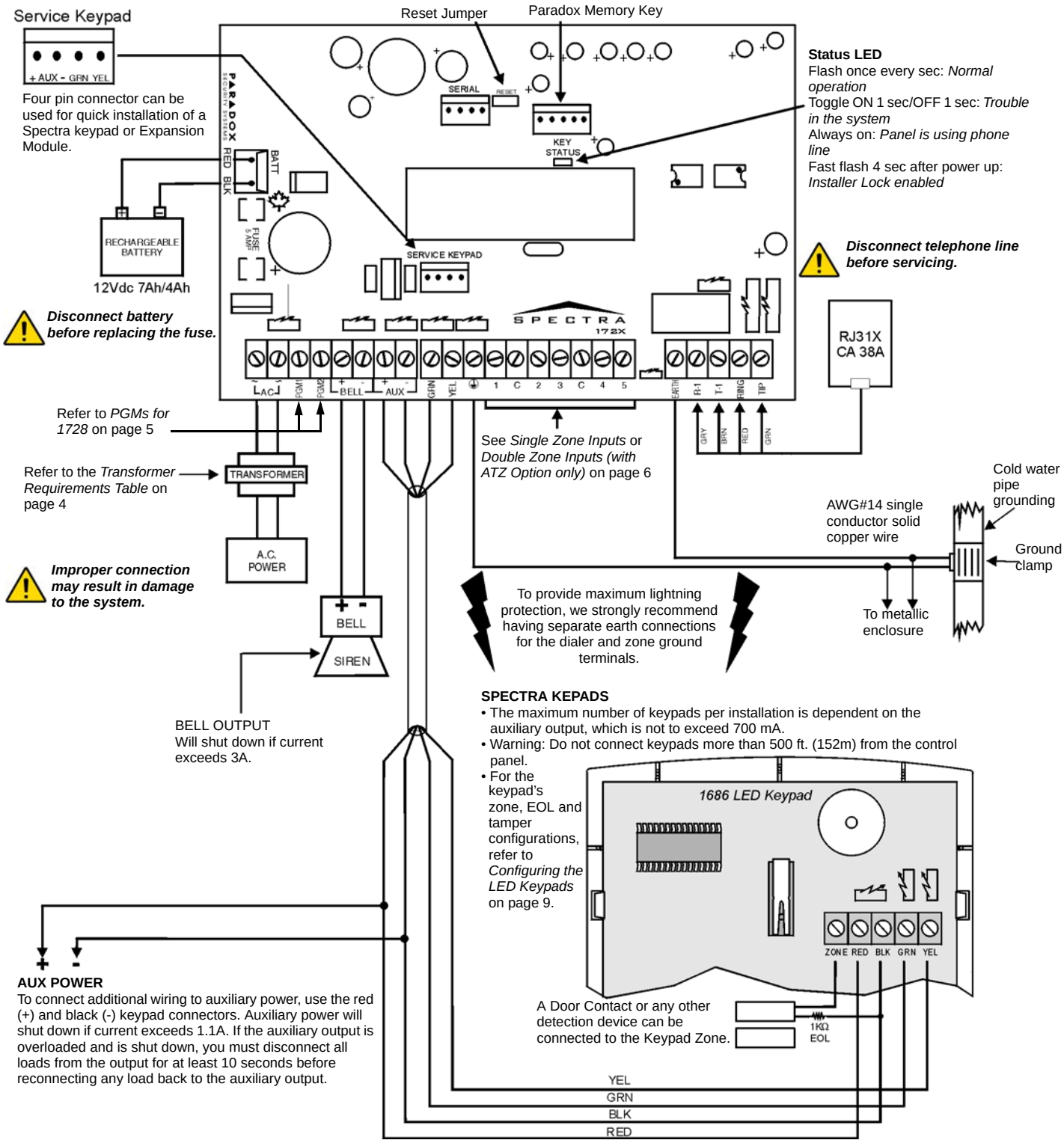

For UL Listed warnings, refer to **UL and ULC Warnings** on page 51.

2.2 Earth Ground

Connect the zone and dialer ground terminals from the control panel to the metallic enclosure and cold water pipe or grounding rod as per local electrical codes.

For maximum lightning protection, use separate earth grounds for the zone and dialer grounds as shown in Figure 1 on page 2. For UL installations, the metallic enclosure must be grounded to the cold water pipe.

2.3 AC Power

Do not use any switch-controlled outlets to power the transformer. Connect the transformer as shown in Figure 1 on page 2. Use Table 1 to determine the required transformer.

Table 1: Transformer Requirements Table

Transformer:	Amseco XP-1620 16Vac **20VA** (Not verified by UL)	UL: Basler Electric BE156240CAA007 16.5Vac **40VA**
Spectra Power Supply rated at:	1.2A	1.5A
Auxiliary Supply can provide a maximum of:	typ: 600mA, max: 700mA	typ: 600mA, max: 700mA
Acceptable Battery Charge Currents	350mA	350mA/700mA

2.4 Backup Battery

In order to provide power during a power loss, connect a 12Vdc 4Ah rechargeable acid/lead or gel cell backup battery as shown in Figure 1 on page 2. Use a 7Ah battery to comply with UL fire requirements. Connect the backup battery after applying AC power. When installing verify proper polarity as reversed connections will blow the battery fuse. Also, refer to *Battery Charge Current* on page 38.

2.4.1 Battery Test

If the battery is disconnected or if the battery fuse is blown, a No/Low Battery failure will appear in the keypads' Trouble Display (see page 44). This trouble will also appear if the battery's capacity is too low or if the voltage drops to 10.5V or lower while the control panel is running on the backup battery. At 8.5V or lower, the panel shuts down and all outputs close.

2.5 Auxiliary Power Terminals

The auxiliary power supply terminals can be used to power motion detectors, keypads and other modules or accessories in the security system. A fuseless circuit protects the power supply against current overload and automatically shuts down if the current exceeds 1.1A. If this occurs, the Maximum Auxiliary Current failure will appear in the keypads' Trouble Display (see page 44). Therefore, the combined current consumption of devices connected to the auxiliary power supply should not exceed 700mA. If the auxiliary output is overloaded and is shut down, you must disconnect all loads from the output for at least 10 seconds before reconnecting any load back to the auxiliary output.

Modules with the APR- prefix are compatible with Spectra (versions 2.0 and higher) and Digiplex (DGP-848). Modules with the APR3- prefix are compatible with Spectra (versions 2.0 and higher) and Digiplex (DGP-848 and DGP-NE96).

Table 2: Current Consumption Table

Modules	Current Consumption	
	Typical	**Maximum**
Spectra 1686H and 1686V 10-Zone LED Keypad	62mA	116mA
Spectra 1689 16-Zone LED Keypad	50mA	117mA
Spectra 1641 LCD Keypad	60mA	80mA
Magellan Wireless Expansion Module (MG-RCV3)	50mA	50mA
8-Zone Expansion Modules (SPC-ZX8 & APR3-ZX8)	28mA	28mA
1-PGM Expansion Module (APR3-PGM1)	28mA	28mA
4-PGM Expansion Module (APR3-PGM4)	13mA	150mA
Printer Module (APR3-PRT1)	22mA	40mA
4-Zone Expansion Module (SPC-ZX4 & APR3-ZX4)	28mA	28mA
InTouch Voice-Assisted Arm/Disarm Module (APR3-ADM2)	70mA	105mA
Motion Detectors (see detector instructions for details)	10 to 50mA	

2.6 Telephone Line Connection

In order to report system events to the monitoring station, you must connect the incoming telephone company wires into the TIP and RING connections of the control panel and then run the wires from T1 and R1 to the telephone or telephone system as shown in Figure 1 on page 2.

2.7 Bell Output Connection

The BELL+ and BELL- terminals power bells, sirens and other warning devices requiring a steady voltage output during an alarm. The bell output supplies 12Vdc upon alarm and can support one 30-watt or two 20-watt sirens. The bell output uses a fuseless circuit and will automatically shut down if the current exceeds 3A. When this occurs the Maximum Bell Current failure will only appear in the keypads' Trouble Display (see page 44) during an alarm. If the load on the BELL terminals returns to normal, the control panel will re-instate power to the BELL terminals during the next alarm. When connecting sirens, please verify correct polarity. Connect the positive lead to the BELL+ terminal and the negative lead to the BELL- terminal of the control panel as shown in Figure 1 on page 2.

If the BELL output is not being used, the Bell Disconnected failure will remain in the keypads' Trouble Display (see page 44). To avoid this connect a 1KΩ resistor across the BELL terminals.

2.8 Programmable Output Connections

When a specific event occurs in the system, a PGM can reset smoke detectors, activate strobe lights, open/close garage doors and much more.

2.8.1 PGMs for 1728

The Spectra 1728 control panels include two on-board programmable outputs (PGM). PGM1 and PGM2 provide a maximum 150mA per output. If the current draw on the PGM is to exceed the current output, we recommend the use of a relay as shown in Figure 3. For details on how to program the PGM, refer to *PGM Programming* on page 35.

Figure 3: PGM

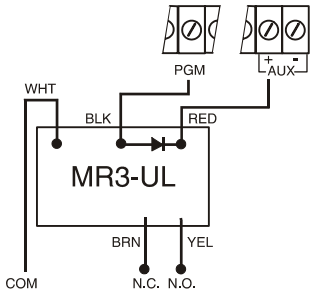

2.8.2 Alarm Relay and PGMs for 1738

The Spectra 1738 control panel includes two on-board programmable outputs (PGMs). For details on how to program the PGM, refer to *PGM Programming* on page 35. PGM1 and PGM2 support up to 1A (see Figure 4 on page 5) and can be used as a strobe output (see page 37). The PGMs are limited by the power source being used. If powered by:

- **The AUX terminals.** The current consumption of the **AUX** terminals cannot exceed 700mA. Therefore whatever devices are connected to the **AUX** terminals (i.e. modules and PGMs) cannot exceed 700mA combined. For example, if there are six modules connected to the **AUX** terminals that are using 600mA and you wish to power the PGM using the **AUX** terminals, the PGM's current consumption cannot exceed 100mA.
- **An external power supply.** If using an external power supply, the current consumption cannot exceed 1A for both PGM1 and PGM2. If the external power supply's current consumption limit is less than that of the PGM it is connected to, than the current consumption will not exceed the power supply's current limit.

The Spectra 1738 control panel also has an optional 5A relay. This relay can be connected as shown in Figure 4. The Alarm Relay can be programmed to follow the bell output or the activation and deactivation of the Global PGM (see *Alarm Relay Options* on page 37).

Figure 4: Relay and PGM Connections

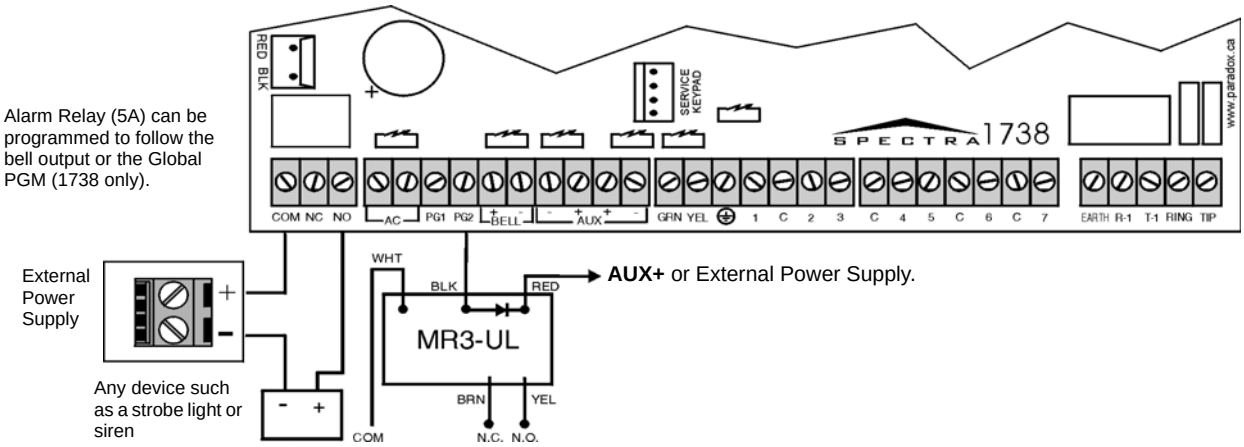

2.9 Single Zone Inputs

Detection devices such as motion detectors and door contacts are connected to the control panel's zone input terminals. Figure 5 on page 6 demonstrates single zone input terminal connections recognized by Spectra. Once connected, the associated zone's parameters must be defined. For details refer to *Zone Programming* on page 13.

Figure 5: Single Zone Input Connections

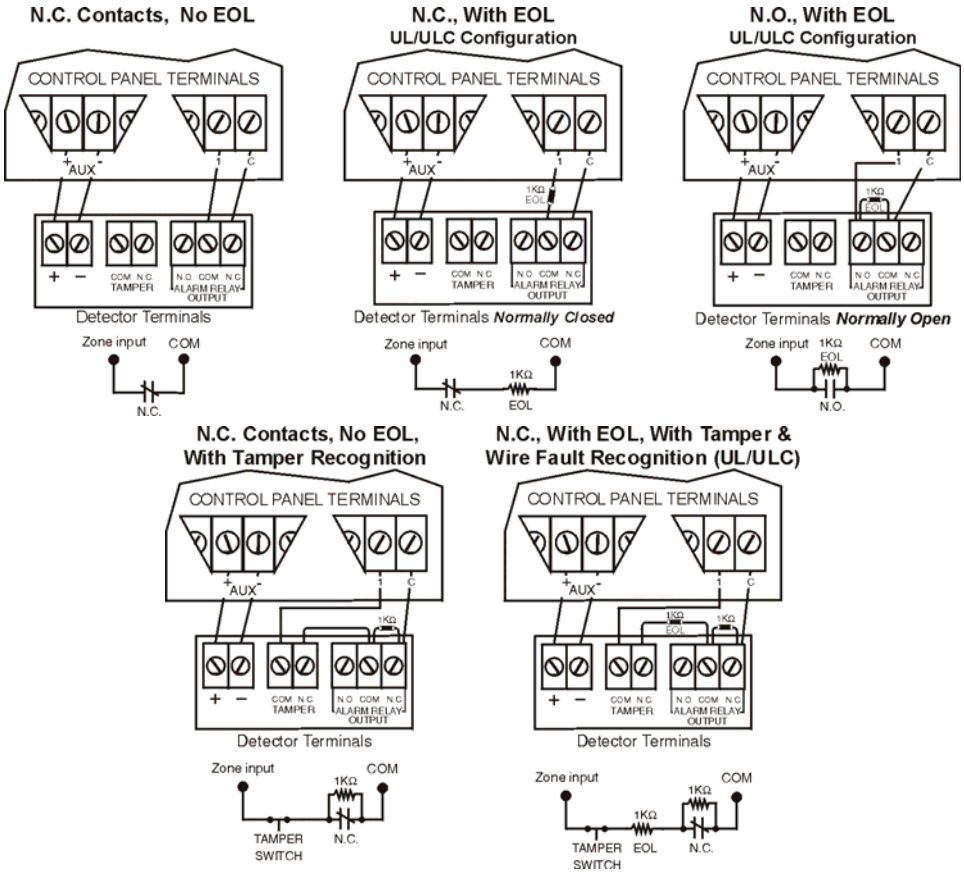

2.10 Double Zone Inputs (with ATZ Option only)

Enabling the *ATZ feature* (see page 20) on the control panel allows you to install two detection devices per input terminal. The *ATZ feature* is a software oriented feature. Therefore, there is no need for extra modules. Simply connect the devices as shown in Figure 6. Devices connected to input terminals must be assigned to a zone and the zone's parameters must be defined. Refer to *Zone Programming* on page 13 for more information. The status of each zone will be displayed on the keypads and the control panel can send separate alarm codes for each zone.

Figure 6: Double Zone (ATZ) Input Connections

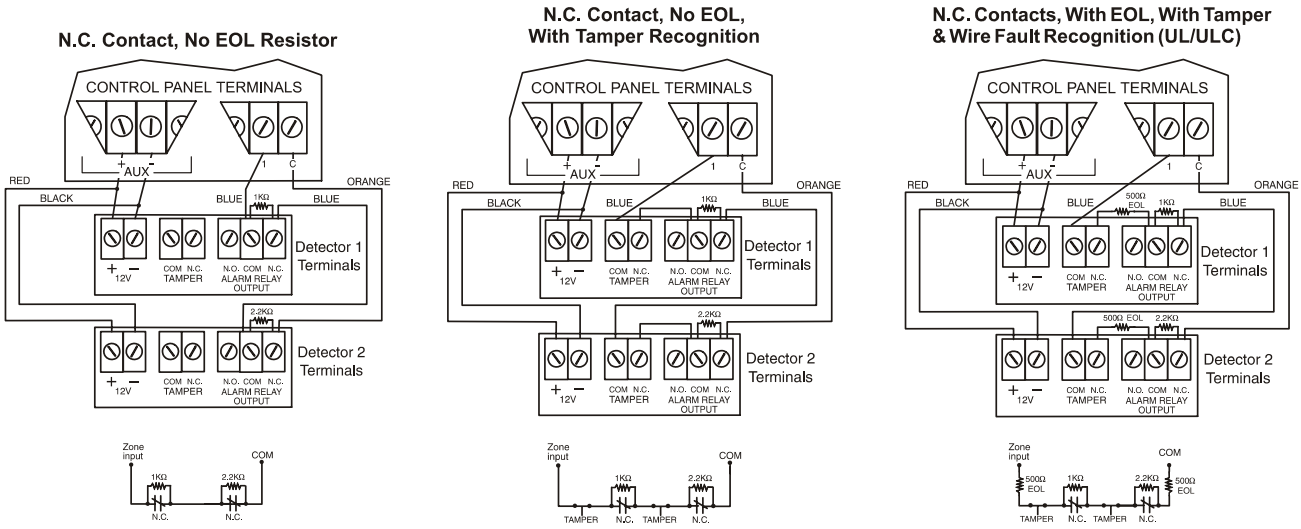

2.11 Keypad and Keypad Zone Connections

To connect the keypads to the control panel, remove the back cover and wire the GRN, YEL, RED, and BLK terminals of each keypad to the corresponding terminals on the control panel as shown in Figure 1 on page 2 or Figure 2 on page 3. There is no limit to the number of keypads that can be connected to the control panel so long as the current consumption does not surpass 700mA.

Each keypad has one zone input terminal, allowing you to connect one motion detector or door contact directly to a keypad. For example, a door contact located at the entry point of an establishment can be wired directly to the input terminal of the entry point keypad instead of wiring the door contact all the way to the control panel. The keypad can then communicate the status of the zone to the control panel. A maximum of two keypad zones can be used with each control panel. After connecting the device, the zone's parameters must be defined. For details on zone recognition and *Zone Programming* refer to page 13. Also, refer to *Reassign Keypad Zone 2* on page 14.

For details on Keypad Tamper Supervision see page 38. For details on Configuring the LED Keypads, see page 9.

If you do not use the keypad zone, do not connect a jumper across the "ZN" and "-" terminals; leave the zone open.

For proper operation of the keypad zones whether they are used or not, always enable the Keypad Zone Sending option on all LCD keypads.

2.12 Keyswitch Connections

Keyswitches allow users to arm or disarm a partition by pushing a button or by activating a switch with a key. Connect the keyswitch as shown in Figure 7 directly to the control panel terminals. Once a keyswitch is connected, it must be assigned to a zone and its parameters must be programmed (see *Keyswitch Options* on page 19 and *Zone Programming* on page 13).

Figure 7: Keyswitch

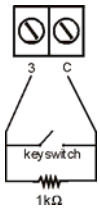

2.13 Fire Circuits

When a zone is programmed as a Fire zone, the zone becomes normally open and requires an EOL resistor. If a line short occurs or if the smoke detector becomes active, whether the system is armed or disarmed, the control panel will generate an alarm. If a trouble occurs on a Fire zone, the Fire Loop Trouble will appear in the keypads' Trouble Display (see page 44) and the control panel can transmit the *Fire Loop Trouble* report, if programmed, in section **[206]**.

Figure 8: 4-Wire Fire Zones

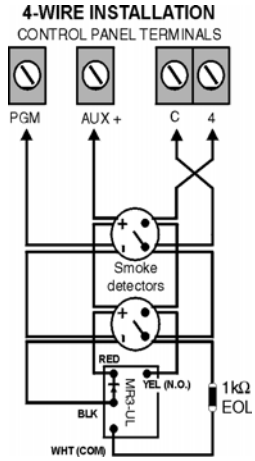

2.13.1 4-Wire Installation:

Any on-board zone can be defined as a *Fire Zone* (see page 15) when using the 4-wire installation. Connect the smoke detectors as shown in Figure 8 directly to the control panel terminals. Program the PGM with the "**[PG]/[FNC1]** Key was Pressed" Activation Event (see page 35) so the smoke detectors can be reset by pressing the **[PG]** or **[FNC1]** key. Pressing the **[PG]** or **[FNC1]** key will interrupt power to the smoke detectors for 4 seconds (see *PGM Delay* on page 36).

2.13.2 2-Wire Installation (1738 Only)

Connect the 2-wire smoke detectors to input 1 as shown in Figure 9. Program the PGM with the "**[PG]/[FNC1]** Key was Pressed" Activation Event (see page 35) so the smoke detectors can be reset by pressing the **[PG]** or **[FNC1]** key. Pressing the **[PG]** or **[FNC1]** key will interrupt power to the smoke detectors for 4 seconds (see *PGM Delay* on page 36).

Figure 9: 2-Wire Fire Zones

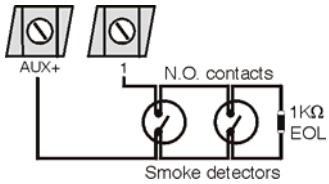

It is recommended that all smoke detectors be connected using a daisy chain configuration.

Part 3: Programming Methods

3.1 WinLoad Software for Windows

Program the Spectra Series control panels remotely or on-site using the Winload Software for Windows®. For more information, contact your local Paradox Distributor or visit our website at www.paradox.ca. If you are using the WinLoad software, you must program the features explained on pages 42 and 43.

3.2 Programming Using a Keypad

Use the supplied *Spectra System Programming Guide* to keep track of which sections were programmed and how. We recommend you read this entire manual before you begin programming.

How Do I Enter Programming Mode?

1) Press **[ENTER]**
2) Enter your **[INSTALLER CODE]** (default: 000000 or 0000)
3) Enter 3-digit **[SECTION]** you wish to program
4) Enter required **[DATA]**

3.2.1 Single Digit Data Entry Method (Hexadecimal and Decimal)

Single Digit Data Entry is used in all sections except those specified in the Feature Select Programming Method. After entering the programming mode as described in the shaded box above, some sections will require that you enter **Decimal** values from **000 to 255**. Other sections will require that you enter **Hexadecimal** values from **0 to F**. The required data will be clearly indicated in this manual as well as in the *Spectra System Programming Guide*. When entering the final digit in a section, the control panel will automatically save and advance to the next section. Except sections 001 to 016, after entering the first two digits the control panel will switch to Feature Select Programming.

Table 3: Decimal and Hexadecimal Programming Table

Value or Action	What Do I Press?	What Do I See?		
		10-Zone LED	16-Zone LED	LCD
Values 1 to 9	[1] to [9]	[1] to [9]	[1] to [9]	[1] to [9]
A (hex only)	[0]	[0 (10)]	[10]	0
B (hex only)	[STAY]	[STAY]	[11]	B
C (hex only)	[BYP]	[BYP]	[12]	C
D (hex only)	[MEM]	[MEM]	[13]	D
E (hex only)	[TBL] / [TRBL]	[TBL]	[14]	E
F (hex only)	[PG] / [FNC1]	[PG]	[15]	F
Exit Without Saving	[CLEAR]	[ENTER] flashes	[ARM1] & [STAY1] flash	“SECTION [ ]”
Insert Blank Digit	[FORCE]	Displays next digit or next section		
Save Data	[ENTER]	Advances to the next section		

3.2.2 Feature Select Programming Method

After entering sections **[001]** to **[016]**, **[126]** to **[138]**, and **[302]** to **[348]**, each option from **[1]** to **[8]** represents a specific feature or option. Press the key corresponding to the desired option and the corresponding light will illuminate or the option number will appear in the LCD display. This means the option is on. Press the key again to extinguish the corresponding light or remove the digit from the LCD display, thereby, turning off the option. Press the **[FORCE]** key to set all 8 options to off. Press the keys until the current section’s options are set. When the options are set, press the **[ENTER]** key to save and advance to the next section.

3.2.3 Data Display Mode (LED Keypads Only)

In the Data Display Mode you can view the programmed contents of each section one digit at a time. After entering the desired 3-digit section (see step 3 of the shaded box on page 8), press the **[ENTER]** key to access the Data Display Mode (will not function with sections using Multiple Feature Select Programming).

Figure 10: Data Display Mode (LED Keypads Only)

To access the Data Display Mode, press the **[ENTER]** key after entering a section and before entering any data. The three LEDs as indicated below will begin to flash indicating that you are in the Data Display Mode.

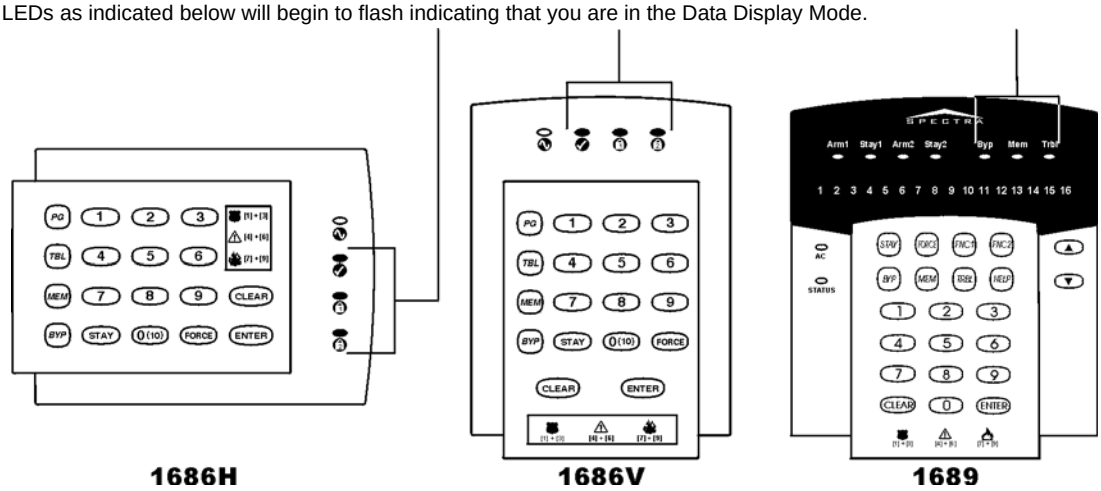

Each time the **[ENTER]** key is pressed, the keypad will display the next digit in the current section and will continue through all the following sections one digit at a time without changing the programmed values. Not available for sections using the Multiple Feature Select Method. Press the **[CLEAR]** key at any time to exit the Data Display Mode.

3.3 Configuring the LED Keypads

Depending on the version of the keypad, two methods can be used to configure the LED keypads (1686H, 1686V and 1689):

3.3.1 Configuring the 1686H, 1686V and 1689 Keypads V2.0 or higher

The keypad's zone number, EOL definition and tamper switch are programmed through the control panel's programming mode. To do so:

How Do I Configure The Keypad?

1) Press **[ENTER]**
2) Enter your **[INSTALLER CODE]** (default: 000000 or 0000)
3) Press the **[PG]** (1686H/V) / **[FNC1]** (1689) key and hold it for 3 seconds.
4) Press the desired key (**[1]** to **[3]**. See below)
5) Press **[ENTER]** to exit programming mode

PLEASE NOTE: After two minutes, the keypad exits programming mode.

Key [1] - Keypad Zone Selection

Key **[1]** determines whether the keypad's zone is Keypad Zone 1 or Keypad Zone 2. When key **[1]** is OFF (not illuminated), the keypad's zone is Keypad Zone 1. When key **[1]** is ON (illuminated), the keypad's zone is Keypad Zone 2. Refer to Table 4 on page 13 for more information.

Key **[1]** OFF = Keypad Zone 1 (default)
Key **[1]** ON = Keypad Zone 2

Key [2] - EOL Definition

Key **[2]** determines the keypad zone's EOL definition. When key **[2]** is OFF (not illuminated), EOL is disabled and the keypad zone will use the on-board EOL resistor. When key **[2]** is ON (illuminated), EOL is enabled and the keypad zone requires that an external EOL resistor be connected (refer to *Spectra 1738 Control Panel Overview* on page 2 and *Spectra 1728 Control Panel Overview* on page 3 for more details).

Key **[2]** OFF = EOL disabled
Key **[2]** ON = EOL enabled (default)

Key [3] - On-Board Tamper
Key **[3]** enables or disables the keypad's on-board tamper switch. When key **[3]** is OFF (not illuminated), the tamper switch is disabled. When key **[3]** is ON (illuminated), the tamper switch is enabled.

Key **[3]** OFF = On-board tamper switch disabled
Key **[3]** ON = On-board tamper switch enabled

PLEASE NOTE: The keypad can be ordered with or without a tamper switch. If the keypad has no tamper switch, key [3] will be OFF by default. If the keypad has a tamper switch, key [3] will be ON by default.

3.4 Programming Using A Paradox Memory Key

Copy the sections of one Spectra control panel into the Paradox Memory Key (PMC-3). Then copy the contents of the Memory Key into as many Spectra control panels as needed. Each panel is programmed in less than 3 seconds.

Download to DESTINATION Control Panel

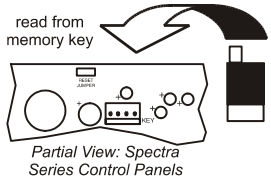

1) Remove AC and battery power from the control panel.
2) Place the Memory Key on the serial connector labeled KEY of the Spectra Control Panel that is to receive the contents of the Memory Key.
3) Reapply AC and battery power.
4) In installer programming mode, enter section **[900]**, then press **[ENTER]** to acknowledge.
5) When the keypad emits a confirmation beep, remove the Memory Key.
6) Enter section **[750]** to reprogram the modules with the information downloaded from the Paradox Memory Key.

Copy to Memory Key from SOURCE Control Panel

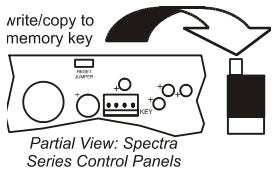

1) Remove AC and battery power from the control panel.
2) Place Memory Key on the serial connector labeled KEY of the Spectra Control Panel that you want to copy. Make sure the write protect jumper of the Memory Key is on.
3) Reapply AC and battery power.
4) In installer programming mode, enter section **[902]**, then press **[ENTER]** to acknowledge.
5) When the keypad emits a confirmation beep, remove the Memory Key. Remove the Memory Key's jumper if you do not wish to accidentally overwrite its contents.

Figure 11: Paradox Memory Key

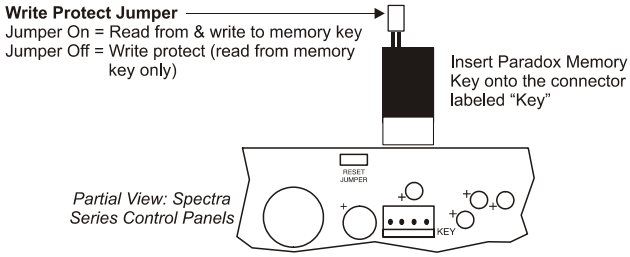

Part 4: Access Codes

The Spectra Series control panels support the following access codes:

Installer Code:	Used to program all control panel settings except User Access Codes.
System Master Code (001)	Provides full access. Arm and disarm using any method described in *User Code Options* on page 11 as well as program the User Access Codes.
Master Code 1 (002):	Permanently assigned to partition 1. Same as a regular User Code except it can also program access codes for User Codes assigned to partition 1.

Master Code 2 (003):	Permanently assigned to partition 2. Same as a regular User Code except it can program access codes for User Codes assigned to partition 2. If the system is not partitioned Master Code 002 will be assigned to partition 1.
45 User Codes (004 to 048):	Can arm and disarm as per *User Code Options* on page 11.

4.1 Access Code Length

Section [127]: System Options
Option **[2]** OFF = 6-Digit Access Codes
Option **[2]** ON = 4-Digit Access Codes (default)

All access codes can be set to lengths of either 4- or 6-digits. When the 4-digit option is selected, entering a 4-digit code will allow access. Using the 6-digit option, entering 6 digits is required to allow access.

If the Access Code Length is changed from four digits to six digits when access codes have already been programmed, the control panel will automatically add the last 2 digits by using the first 2 digits. For example, if the access code is 1234 and you switch to 6 digits, the code will become 123412. Be sure to verify the access codes after switching from 4-digit access codes to 6-digit codes. When switching from six digits to four digits, the control panel will simply remove the final two digits of the access code. For example, 123456 will become 1234.

4.2 Installer Code (Default: 000000 or 0000)

The Installer Code is used to enter the control panel's programming mode (see page 8), which allows you to program all the features, options and commands of the control panel. The Installer Code can be 4- or 6-digits in length (see above) where each digit can be any value from 0 to 9. The Installer Code cannot be used to program Master Code 1, Master Code 2 or User Access Codes. To program the Installer Code press:

[ENTER] + **[CURRENT INSTALLER CODE]** + **[281]** + *new 4- or 6-digit Installer Code*

4.3 System Master Code (Default: 123456 or 1234)

The Installer Code can be used to program the System Master Code. With the System Master Code a user can use any arming method and can program any User Access Code, but not the User Code Options. The System Master Code can be 4 or 6 digits in length (see *Access Code Length* on page 11), where each digit can be any digit from 0 to 9. To change the System Master Code press:

[ENTER] + **[INSTALLER CODE]** + **[301]** + *new 4- or 6-digit System Master Code*

4.4 User Code Options

Sections **[302]** to **[348]**: Options **[1]** to **[7]**

The User Code Options define which arming methods each user can use to arm or disarm the system. Regardless of these settings, all users can Regular Arm assigned partitions and all users except those with the Arm Only option can disarm an assigned partition, regardless of how it is armed. Select one or more of the options described on the following pages for each User Access Code, where sections **[302]** to **[348]** represent User Access Codes 002 to 048. For information on how User Access Codes are programmed, please refer to page 45.

4.4.1 Partition 1 Assignment

Sections [302] to [348]: User Codes 002 to 048
Option **[1]** OFF = Deny access to partition 1
Option **[1]** ON = User code has access to partition 1 (default)

If Partitioned (see page 38), user codes with this option enabled can arm and disarm partition 1.

If the system is not partitioned, you must assign partition 1 to the User Access Code. Otherwise, the User Access Code will be considered disabled.

4.4.2 Partition 2 Assignment

Sections [302] to [348]: User Codes 002 to 048
Option **[2]** OFF = Deny access to partition 2 (default)
Option **[2]** ON = User code has access to partition 2

If the system is partitioned (see page 38), user codes with this option enabled can arm and disarm partition 2. If the system is not partitioned, the control panel ignores this option.

4.4.3 Bypass Programming

Sections [302] to [348]: User Codes 002 to 048
Option **[3]** OFF = Bypass Programming Disabled
Option **[3]** ON = Bypass Programming Enabled (default)

User codes with this option enabled can perform Bypass Programming in assigned partitions.

4.4.4 Stay Arming

Sections [302] to [348]: User Codes 002 to 048
Option **[4]** OFF = Stay Arming Disabled
Option **[4]** ON = Stay Arming Enabled for selected User Code (default)

User codes with this option enabled can Stay Arm assigned partitions.

4.4.5 Force Arming

Sections [302] to [348]: User Codes 002 to 048
Option **[5]** OFF = Force Arming Disabled (default)
Option **[5]** ON = Force Arming Enabled for selected User Code

User codes with this option enabled can Force Arm assigned partitions.

4.4.6 Arm Only

Sections [302] to [348]: User Codes 002 to 048
Option **[6]** OFF = Arm Only Disabled (default)
Option **[6]** ON = Arm Only Enabled for selected User Code

The user code with this option enabled can arm assigned partitions, but cannot disarm any partitions. The type of arming is dependent on the other User Code Options selected. Please note that with the Arm Only option, the user can cancel a recently armed system by re-entering the access code before the end of the Exit Delay.

4.4.7 PGM Activation

Sections [302] to [348]: User Codes 002 to 048
Option **[7]** OFF = User Code follows User Code Options and can activate a PGM (default)
Option **[7]** ON = User Code can activate a PGM only

With option **[7]** off, entering the access code will arm or disarm according to the programmed User Code Options as well as activate or deactivate a PGM. The appropriate PGM Activation/Deactivation Event must also be programmed (see page 35). With option **[7]** on, the control panel will ignore all other User Code Options. Therefore, entering the access code will only activate or deactivate the PGM.

4.5 Lock Master Code

Section [127]: System Options
Option **[4]** OFF = Lock System Master Code Disabled (default)
Option **[4]** ON = Lock System Master Code Enabled

With this feature enabled, the control panel will lock the System Master Code (001). This means that the System Master Code cannot be deleted, but it can be changed.

4.6 Duress Code

Section [127] = System Options
Option **[6]** OFF = Duress Code Disabled (default)
Option **[6]** ON = User Code 048 becomes a Duress code

With this feature enabled, User Code 048 becomes a Duress Code. When forced to arm or disarm their system, users can enter a Duress Code (User Code 048) to arm or disarm the system which can immediately transmit a silent alert to the Monitoring Station, transmitting the duress report code programmed in section **[196]**.

Part 5: Zone Programming

When programming zones, the zone assignments are dependent on where the detection devices are connected to in the system (see Table 4 and Table 5). In installations that require using mostly the expansion inputs, see *Reassign Keypad Zone 2* on page 14 and *Reassign Zones to Expansion Inputs (1728 only)* on page 14).

Table 4: Zone Recognition Table for 1728

	Section [126] Option [7]: OFF Option [8]: OFF		**Section [126] Option [7]: ON Option [8]: OFF**		**Section [126] Option [7]: OFF Option [8]: ON**		**Section [126] Option [7]: ON Option [8]: ON**	
Control Panel	**1728**	**1728 w/ATZ**	**1728**	**1728 w/ATZ**	**1728**	**1728 w/ATZ**	**1728**	**1728 w/ATZ**
Input 1 =	Zone 1	Zone 1 & 6	Zone 1	Zone 1 & 6	Zone 1	Zone 1 & 3	Zone 1	Zone 1 & 3
Input 2 =	Zone 2	Zone 2 & 7	Zone 2	Zone 2 & 7	Zone 2	Zone 2 & 4	Zone 2	Zone 2 & 4
Input 3 =	Zone 3	Zone 3 & 8	Zone 3	Zone 3 & 8	N/A	N/A	N/A	N/A
Input 4 =	Zone 4	Zone 4 & 9	Zone 4	Zone 4 & 9	N/A	N/A	N/A	N/A
Input 5 =	Zone 5	Zone 5 & 10	Zone 5	Zone 5 & 10	N/A	N/A	N/A	N/A
Keypad								
Zone 1 =	Zone 6	Zone 11	Zone 6	Zone 11	Zone 3	Zone 5	Zone 3	Zone 5
Zone 2 =	Zone 7	Zone 12	N/A	N/A	Zone 4	Zone 6	N/A	N/A
Expansion								
Input 1 =	Zone 8	Zone 13	Zone 7	Zone 12	Zone 5	Zone 7	Zone 4	Zone 6
Input 2 =	Zone 9	Zone 14	Zone 8	Zone 13	Zone 6	Zone 8	Zone 5	Zone 7
Input 3 =	Zone 10	Zone 15	Zone 9	Zone 14	Zone 7	Zone 9	Zone 6	Zone 8
Input 4 =	Zone 11	Zone 16	Zone10	Zone 15	Zone 8	Zone 10	Zone 7	Zone 9
Input 5 =	Zone 12	N/A	Zone 11	Zone 16	Zone 9	Zone 11	Zone 8	Zone 10
Input 6 =	Zone 13	N/A	Zone 12	N/A	Zone 10	Zone 12	Zone 9	Zone 11
Input 7 =	Zone 14	N/A	Zone 13	N/A	Zone 11	Zone 13	Zone 10	Zone 12
Input 8 =	Zone 15	N/A	Zone 14	N/A	Zone 12	Zone 14	Zone 11	Zone 13

= not displayed on 10-Zone LED Keypads

Option [7] = Reassign Keypad Zone (see page 14)

Option [8] = Reassign Zones to Expansion Inputs (see page 14)

Table 5: Zone Recognition Table for 1738

Control Panel	Option [7]: OFF NO ATZ	Option [7]: OFF WITH ATZ	Option [7]: ON NO ATZ	Option [7]: ON WITH ATZ
Input 1 =	Zone 1	Zone 1 & 8	Zone 1	Zone 1 & 8
Input 2 =	Zone 2	Zone 2 & 9	Zone 2	Zone 2 & 9
Input 3 =	Zone 3	Zone 3 & 10	Zone 3	Zone 3 & 10
Input 4 =	Zone 4	Zone 4 & 11	Zone 4	Zone 4 & 11
Input 5 =	Zone 5	Zone 5 & 12	Zone 5	Zone 5 & 12
Input 6 =	Zone 6	Zone 6 & 13	Zone 6	Zone 6 & 13
Input 7 =	Zone 7	Zone 7 & 14	Zone 7	Zone 7 & 14
Keypad				
Zone 1 =	Zone 8	Zone 15	Zone 8	Zone 15
Zone 2 =	Zone 9	Zone 16	N/A	N/A
Expansion				
Input 1 =	Zone 10	N/A	Zone 9	Zone 16
Input 2 =	Zone 11	N/A	Zone 10	N/A
Input 3 =	Zone 12	N/A	Zone 11	N/A
Input 4 =	Zone 13	N/A	Zone 12	N/A
Input 5 =	Zone 14	N/A	Zone 13	N/A
Input 6 =	Zone 15	N/A	Zone 14	N/A
Input 7 =	Zone 16	N/A	Zone 15	N/A
Input 8 =	N/A	N/A	Zone 16	N/A

Option [7] = Reassign Keypad Zone (see page 14)

5.1 What is an Expansion Input?

An expansion input allows you to connect modules to the system to increase the number of zones available up to 16 zones. Each hardwired input on a zone expansion bus module or wireless transmitter used by a wireless bus module can be assigned to an expansion input. The expansion inputs can be used in any combination. For example, 5 wireless transmitters and 3 hardwire inputs can be assigned to the expansion inputs. Spectra control panels cannot support more than eight expansion inputs. Refer to the appropriate module's Instruction Sheet for details.

Do not assign inputs from different modules to the same expansion input.

5.2 Reassign Keypad Zone 2

Section [126]: General Options
Option **[7]** OFF = Reassign Keypad Zone 2 Disabled (default)
Option **[7]** ON = Reassign Keypad Zone 2 Enabled

The Reassign Keypad Zone 2 feature changes the keypad zone into an expansion input. Depending on the application, this feature is used to either increase the number of expansion inputs that are displayed on 10-Zone LED keypads (1728 and 1738) or gain an expansion output. See Table 4 on page 13 and Table 5 on page 14 for zone recognition. For 1728 systems, combine the Reassign Zones to Expansion Inputs feature (see page 14) to increase the number of displayable expansion inputs.

When Reassign Keypad Zone 2 is enabled, the Keypad Tamper Supervision (see page 38) for keypad zone 2 is lost. Keypad Tamper Supervision will* ONLY *function on Keypad Zone 1.

5.3 Reassign Zones to Expansion Inputs (1728 only)

Section [126]: General Options
Option **[8]** OFF = Reassign Zones to Expansion Inputs Disabled (default)
Option **[8]** ON = Reassign Zones to Expansion Inputs Enabled

In installations that require using mostly the expansion inputs, such as using wireless zones, 10-Zone LED keypads may be unable to display some of the zones. The Reassign Zones to Expansion Inputs feature changes the zone numbering to increase the number of expansion inputs that are displayed on the 10-Zone LED keypads. Combine with the Reassign Keypad Zone 2 feature (see page 14) to increase the number of displayable expansion inputs. See Table 4 on page 13 for zone recognition.

5.4 Zone Programming

After connecting a hardwired detection device to one of the control panel's or zone expansion bus module's input terminals or after setting up any wireless transmitters, define the associated zone's parameters. The Zone Parameters define the type of zone, the zone's partition assignment and how the control panel will react when an alarm condition occurs on that zone. These Zone Parameters are programmed into one section as detailed in Figure 12 on page 15.

Only the control panel's on-board inputs can be defined as a Fire, Delayed Fire or a Keyswitch zone. In the 1728 the on-board zones are zones 01 to 05 and in the 1738 the on-board zones are zones 01 to 07.

See Table 4 on page 13 and Table 5 on page 14 for zone recognition.

Figure 12: Spectra Zone Programming

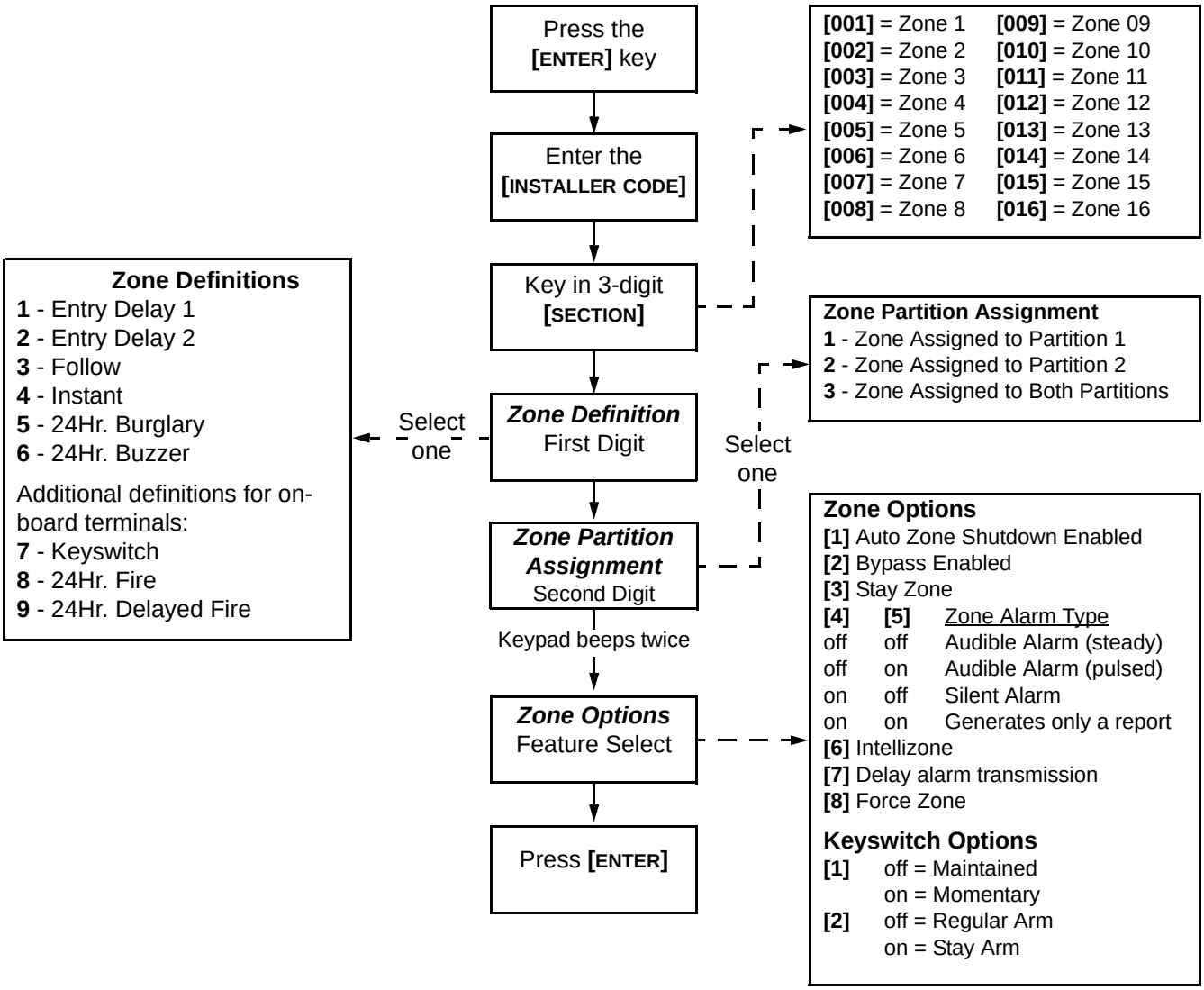

5.5 Zone Definitions

As demonstrated in Figure 12, sections **[001]** to **[016]** represent zones 1 through 16 respectively, where the first digit in each of these sections represents the zone's definition. Also, refer to *Zone Speed* on page 20. To **disable a zone**, clear the contents of the section corresponding to the desired zone by pressing the **[FORCE]** key 3 times and pressing **[ENTER]**. There are 9 available Zone Definitions, which are described as follows.

5.5.1 Entry Delay 1

Sections [001] to [016]: Zones 1 to 16, First Digit = **1**

When the system is armed and a zone defined with Entry Delay 1 opens, the control panel will generate an alarm after the programmed Entry Delay 1 Timer elapses. This is to provide users with enough time to enter the protected area and disarm the system. To program the Entry Delay 1 Timer, key in the desired 3-digit delay value (000 to 255 seconds, Default = 45 seconds) into section **[069]**. Entry Delay zones are commonly used at the entry/exit points of the protected area (i.e. front/back door, garage, etc.). Using different Entry Delays (see *Entry Delay 2*, below) is useful when, for example, one entry point requires a longer delay than the other entry point or in a partitioned system where each partition may require a different Entry Delay.

5.5.2 Entry Delay 2

Sections [001] to [016]: Zones 1 to 16, First Digit = **2**

Entry Delay 2 zones are identical to the Entry Delay 1 zones (see *Entry Delay 1*, above), except it uses a separate Entry Delay Timer. To program the Entry Delay 2 Timer, key in the desired 3-digit delay value (000 to 255 seconds, Default = 45 seconds) into section **[070]**.

This timer is also used as the Stay Delay timer (see *Stay Arming with Delay* on page 22).

5.5.3 Follow Zones

Sections [001] to [016]: Zones 1 to 16, First Digit = **3**

When an armed Follow Zone opens, the control panel will immediately generate an alarm, unless an Entry Delay zone opens first:

- If an armed Follow Zone opens after an Entry Delay zone opens, the control panel waits until the Entry Delay Timer has elapsed before generating an alarm.
- If an armed Follow Zone opens after more than one Entry Delay zone opens, the control panel will wait until the Entry Delay Timer of the zone that opened first has elapsed.

This feature is commonly used when a motion detector is protecting the area occupied by the entry point keypad. This will prevent the motion detector from causing an alarm when a user enters through the entry point to disarm the system.

5.5.4 Instant Zones

Sections [001] to [016]: Zones 1 to 16, First Digit = **4**

When an armed Instant Zone opens, the control panel immediately generates an alarm. Instant Zones are commonly used for windows, patio doors, skylights and other perimeter type zones.

5.5.5 24Hr. Burglary Zones

Sections [001] to [016]: Zones 1 to 16, First Digit = **5**

Whenever a 24Hr. Burglary Zone opens, whether the system is armed or disarmed, the control panel will immediately generate an alarm.

5.5.6 24Hr. Buzzer

Sections [001] to [016]: Zones 1 to 16, First Digit = **6**

Whenever a 24Hr. Buzzer Zone opens, whether the zone is armed or disarmed, the control panel sets off the keypads' buzzers to indicate that the zone was breached. The control panel will report the alarm, but will not enable the bell/siren output. Enter any valid access code on the keypad to stop the buzzer. This zone definition is particularly useful when a user wishes to be notified when something such as a safe or locker within the home has been accessed (i.e. a child accessing a valuable collection).

5.6 Exclusive Zone Definitions

The following three zone definitions can only be used for devices connected directly to the control panel's on-board input terminals. When a zone is programmed as a Keyswitch Zone, the control panel will ignore all other Zone Options. When a zone is programmed as a Standard Fire Zone or Delayed Fire Zone, the control panel will ignore

the Zone Options that may have been programmed, except Auto Zone Shutdown. Wireless devices and devices connected to the zone expansion bus modules cannot be programmed with these definitions.

5.6.1 Keyswitch Zone

1728: Sections [001] to [005]: Zones 1 to 5, First Digit = **7**
1738: Sections [001] to [007]: Zones 1 to 7, First Digit = **7**
Connecting a keyswitch to a zone allows users to arm the system by pressing a button or by turning a switch on or off with a key. Please refer to *Keyswitch Connections* on page 7 and to *Keyswitch Options* on page 19.

If the ATZ feature is enabled when using a Keyswitch, the control panel will disable the "doubled zone" (see Zone Doubling on page 20).

5.6.2 Standard 24Hr. Fire Zone

1728:
Sections [001] to [005]: Zones 1 to 5, First Digit = **8**
1738:
Sections [001] to [007]: Zones 1 to 7, First Digit = **8**
Whenever a Standard 24Hr. Fire Zone opens, whether it is armed or disarmed, the control panel will generate the following:

- The control panel can send the corresponding Alarm Report Code from sections **[187]** to **[190]**.
- If a tamper/wiring fault occurs on a Fire Zone, the control panel can send a Fire Loop Trouble report code programmed in section **[206]** to the Monitoring Station. The keypads will display a Fire Loop Trouble in their Trouble Display (see page 44).
- Alarms are always audible regardless of other settings. Fire alarms generate an intermittent (pulsed) bell/siren output signal as shown in Figure 14.

For information on how to connect smoke detectors to the control panel, refer to *Fire Circuits* on page 7.

5.6.3 Delayed Fire Zone

1728:
Sections [001] to [005]: Zones 1 to 5, First Digit = **9**
1738:
Sections [001] to [007]: Zones 1 to 7, First Digit = **9**
When a Delayed 24Hr. Fire Zone opens, whether it is armed or disarmed, the control panel will react as shown in Figure 13. Delayed 24Hr. Fire Zones are commonly used in residential homes where a smoke detector often generates false alarms (i.e. burning bread, etc.).

Figure 13: Delayed 24Hr. Fire Zone

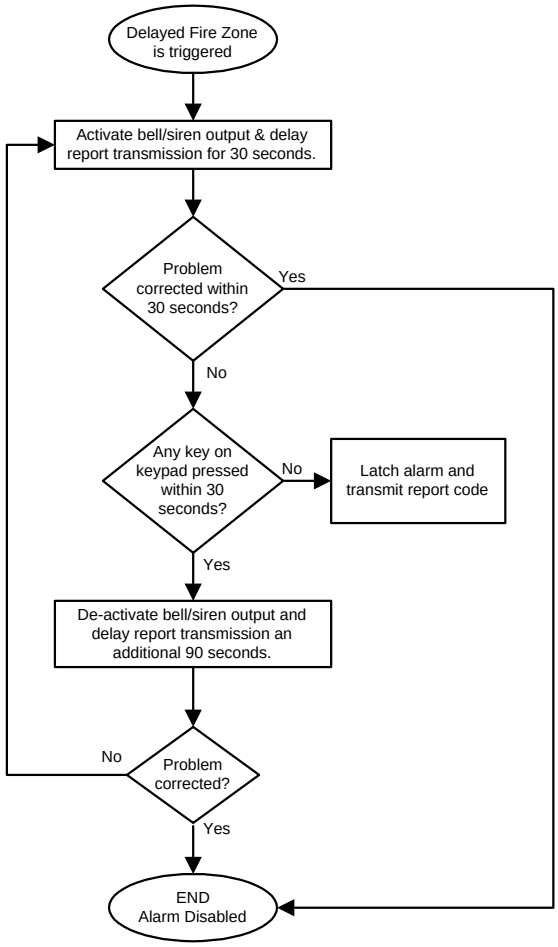

If the ATZ feature is enabled when using any type of Fire Zone, the control panel will disable the "doubled zone" (see Zone Doubling on page 20).

Figure 14: Bell Output During Fire Alarm

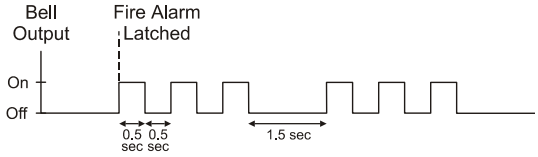

5.7 Programming a Wireless Fire Zone

Fire zones cannot be assigned to expansion zones. As a result, when installing a wireless smoke detector, the corresponding zone must be programmed as follows:

1. Enter **[5]** in the Zone Definition to define it as a 24Hr Burglary Alarm (see page 16).

2. Disable **[4]** and enable **[5]** in Zone Options to set the zone's alarm type to a pulsed Audible Alarm (see page 18).
3. Disable **[1]** and **[2]** in Zone Options to disable the zone's Auto Zone Shutdown (see page 18) and Bypass Enabled features (see page 18).
4. Change the zone's report code from a Burglary report code (Prog. Value 11) to a Fire report code (Prog. Value 04). If using Ademco Contact I.D., set the Contact ID Options from All Codes to Programmable (section **[136]** option **[3]** = OFF) and then enter the report code manually. See the *Spectra System Programming Guide* for more information.

5.8 Zone Partition Assignment

Sections [001] to [016]: Zones 1 to 16

The control panel provides the option of partitioning the security system into two completely independent systems. As demonstrated in Figure 5-1 on page 16, sections **[001]** to **[016]** represent zones 1 through 16 respectively, where the second digit in each of these sections represents the zone's partition assignment. The zone is assigned to Partition 1 if second digit = **1**, Partition 2 if second digit = **2**, or both partitions is second digit = **3**. For details on Partitioning, refer to page 38.

5.9 Zone Options

As demonstrated in Figure 12 on page 15, sections **[001]** to **[016]** represent zones 1 through 16 respectively. After entering the first two digits, select one or more of the following Zone Options by using the Multiple Feature Select Programming Method (see page 8):

5.9.1 Auto Zone Shutdown

Sections [001] to [016] = Zones 1 to 16
Option **[1]** OFF = Auto Zone Shutdown Disabled
Option **[1]** ON = Auto Zone Shutdown Enabled for selected zone (default)

If, in a single armed period, the number of alarms generated by a zone with the Auto Zone Shutdown option enabled exceeds the number defined by the Auto Zone Shutdown Counter, the control panel will no longer generate an alarm for that zone. To program the Auto Zone Shutdown Counter, key in the desired limit (000=Disabled, 001 to 015, Default = 5) into section **[089]**. The Auto Zone Shutdown Counter resets every time the partition that is assigned to the corresponding zone is armed.

5.9.2 Bypass Zones

Sections [001] to [016] = Zones 1 to 16
Option **[2]** OFF = Bypass Zone Disabled
Option **[2]** ON = Selected Zone is Bypass Enabled (default)

When a user, utilizes the Bypass Programming feature (see page 47), only zones with the Bypass option enabled can be programmed as bypassed.

Do not program a Fire Zone with the Bypass option, as the control panel will never bypass Fire Zones.

5.9.3 Stay Zones

Sections [001] to [016]: Zones 1 to 16
Option **[3]** OFF = Stay Zone Disabled (default)
Option **[3]** ON = Selected Zone is Stay Enabled

Zones with the Stay option enabled will be bypassed when the system is Stay Armed (see page 46).

Do not program a Fire Zone with the Stay option, as the control panel will never bypass Fire Zones when Stay Arming.

5.9.4 Alarm Types

Sections [001] to [016]: Zones 1 to 16

[4] OFF / **[5]** OFF: *Audible Steady* (default)
When the conditions for an alarm have been met, the control panel can transmit the appropriate Zone Alarm report code (see page 29) and provides a steady output for any bells or sirens connected to the control panel's bell output.

[4] OFF / **[5]** ON: *Audible Pulsed Alarm*
When the conditions for an alarm have been met, the control panel can transmit the appropriate Zone Alarm report code (see page 29) and provides a pulsed output (see Figure 5-2 on page 16) for any bells or sirens connected to the control panel's bell output.

[4] ON / **[5]** OFF: *Silent Alarm*
When the conditions for an alarm are met, the control panel can transmit the appropriate Zone Alarm report code (see page 29) and will not activate the control panel's bell output. The appropriate ARM or STATUS LED on the keypads will flash to indicate an alarm and the user will still have to disarm the system.

[4] ON / **[5]** ON: *Report Only*
When the conditions for an alarm have been met, the control panel can transmit the appropriate Zone Alarm report code (see page 29). The system will not have to be disarmed.

5.9.5 Intellizone

Sections [001] to [016]: Zones 1 to 16
Option **[6]** OFF = Intellizone Disabled (default)
Option **[6]** ON = Intellizone Enabled for Selected Zone

This feature reduces the possibility of false alarms. When a zone with the Intellizone option opens, the panel does not immediately generate an alarm. First it triggers the Intellizone Delay Timer. To program the Intellizone Delay Timer, key in the desired 3-digit value (010 to 255 seconds, Default = 48 seconds) into section **[084]**. If any of the following conditions occur during this period, the panel will generate an alarm:

- During the Intellizone Delay, a second zone has caused an alarm.
- During the Intellizone Delay, the zone in alarm has restored (closed) and re-occurred (opened).
- The zone in alarm remains open for the entire Intellizone Delay.

5.9.6 Delay Before Alarm Report Code Transmission

Sections [001] to [016]: Zones 1 to 16
Option **[7]** OFF = Delay Alarm Transmission Disabled (default)
Option **[7]** ON = Delay Alarm Transmission Enabled for Selected Zone

When an alarm condition occurs on a zone with this option enabled, the control panel enables the bell/siren output, but does not report the alarm to the monitoring station until the end of the Alarm Before Transmission Delay. To program the Alarm Transmission Delay, key in the desired 3-digit delay value (000 = Disabled, 001 to 255 seconds) into section **[080]**. During this period, disarming the system disables the bell/siren output and cancels the report code transmission. This feature is commonly used with Entry Delay zones to reduce false alarms created by new users who may not disarm the system in time.

5.9.7 Force Zones

Sections [001] to [016]: Zones 1 to 16
Option **[8]** OFF = Force Zone Disabled (default)
Option **[8]** ON = Selected Zone is Force Enabled

Any open Force Zones at the time of arming will be considered deactivated by the control panel (see page 47). If during this period a deactivated zone is closed, the control panel will revert that zone to active status. Consequently, the control panel will generate an alarm if the zone is breached.

Do not program a Fire Zone with the Force option, as the control panel will never bypass Fire Zones when Force Arming.

5.9.8 Keyswitch Options

1728: Sections [001] to [005]: Option [1] and [2]
1738: Sections [001] to [007]: Option [1] and [2]

When an on-board zone is programmed as a Keyswitch Zone (see section 5.6.1 on page 17), the control panel will ignore any other Zone Option. The keyswitch can be programmed as a Maintained or Momentary Keyswitch and to Regular or Stay Arm (see section 12.4 on page 46). A Maintained Keyswitch will arm the system when it is set to the ON position and will disarm when set to the OFF position. To arm with a Momentary Keyswitch, set the keyswitch to the ON position then turn it back to the OFF position. Repeating this sequence will disarm the system. Program the keyswitch with the following:

Option **[1]** OFF	= Maintained (default)	Option **[2]** OFF	= Regular Arming (default)
Option **[1]** ON	= Momentary	Option **[2]** ON	= Stay Arming

5.10 Zone Speed

Sections [050] to [065]: Zones 1 to 16
001 to 255 X 10ms, Default = 600ms

The Zone Speed defines how quickly the control panel will respond to an open zone. The control panel will not display an open zone on the keypad or generate an alarm until the programmed Zone Speed has elapsed. All other zone definitions and options do not come into effect until the Zone Speed has elapsed. This feature prevents any momentary glitches from causing an alarm or unnecessary reporting.

If the ATZ feature is enabled (see ATZ - Zone Doubling below), do not set the Zone Speed to less than 50msec. as this may cause false alarms.

5.11 EOL Zones

Section [132]: Zone Options
Option **[4]** OFF = Zones do not use EOL resistors (default)
Option **[4]** ON = Zones require EOL resistors

If all detection devices connected to the control panel have input terminals that require 1KΩ end of line resistors, enable option **[4]** in section **[132]**. For details on using EOL resistors, refer to *Single Zone Inputs* and *Double Zone Inputs (with ATZ Option only)* on page 6.

5.12 ATZ - Zone Doubling

Section [132]: Zone Options
Option **[5]** OFF = Zone Doubling Disabled (default)
Option **[5]** ON = Zone Doubling Enabled

Enabling the ATZ feature allows you to install two detection devices per zone input terminal. Each detection device will have its own zone, displaying zone status on the keypad and sending separate alarm codes for each zone. The extra zones are recognized as described in Table 4 on page 13 (1728) and Table 5 on page 14 (1738) or in Figure 16 below (1728) and Figure 16 on page 20. For more information on how to connect two detection devices, please refer to *Double Zone Inputs* on page 6.

When a zone is defined as a Keyswitch or a Fire Zone and the ATZ feature is enabled, the control panel will disable the "doubled zone".

Figure 15: Zone Recognition with ATZ enabled (1728 only)

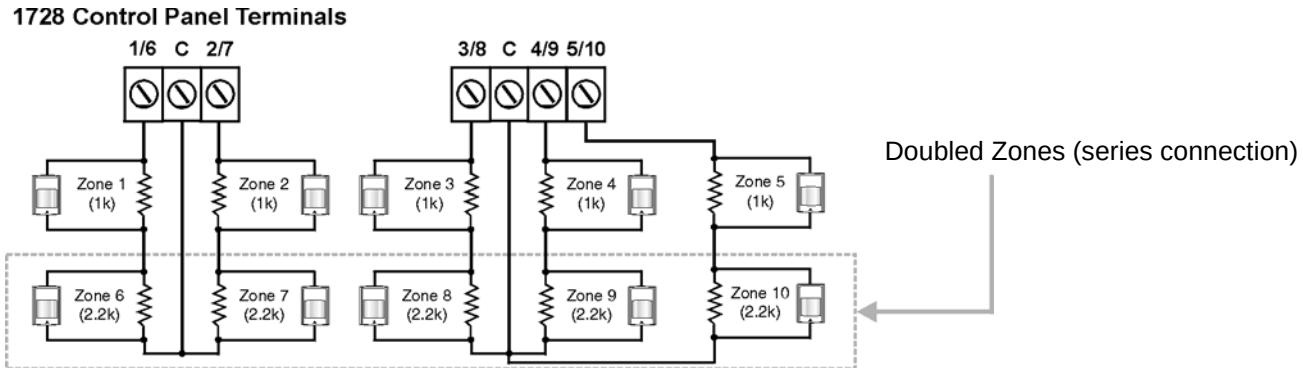

Figure 16: Zone Recognition with ATZ enabled (1738 only)

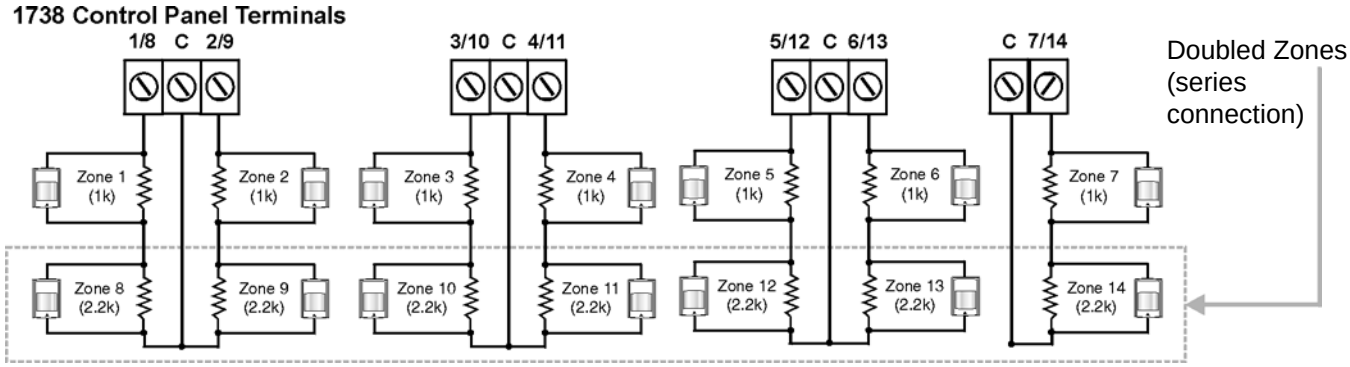

5.13 ATZ Wiring Options (1728 only)

Section [127]: General Options
Option [8] OFF = Series wiring (default)
Option [8] ON = Parallel wiring

The Spectra 1728 control panel allows for the ATZ to be connected in parallel with the zone input. When section **[127]** option **[8]** is OFF (disabled), connect the ATZ zone in series with the zone input. When option **[8]** is ON (enabled), connect the ATZ zone in parallel with the zone input. See Figure 17 below for a parallel connection drawing.

Figure 17: Parallel Wiring (1728 only)

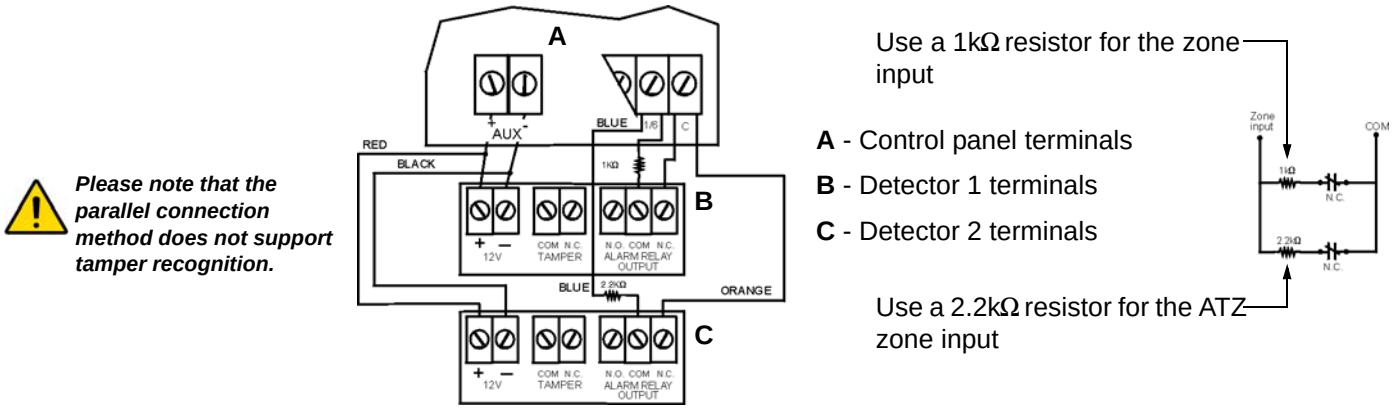

Please note that the parallel connection method does not support tamper recognition.

5.14 Zone 1 Becomes 2-wire Smoke Input (1738 only)

Section [126]: General Options
Option **[8]** OFF = Zone 1 Becomes 2-Wire Smoke Input Disabled (default)
Option **[8]** ON = Zone 1 Becomes 2-Wire Smoke Input Enabled

Zone 1 can be defined as a 2-wire smoke detector input. If a line short occurs or the smoke detector activates, where the system is armed or disarmed, the control panel will generate an alarm. To define zone 1 as a 2-wire smoke detector input:

1. Define zone 1 as a standard or delayed fire zone (see *Standard 24Hr. Fire Zone* on page 17 and *Delayed Fire Zone* on page 17).
2. Set zone 1 to recognize 2-wire smoke detectors (turn option [**8**] ON).
3. Connect the 2-wire smoke detector as shown below using a 1kΩ EOL resistor. Each Spectra 1738 control panel supports a maximum of five 2-wire smoke detectors.

Figure 18: 2-Wire Smoke Detector Connection

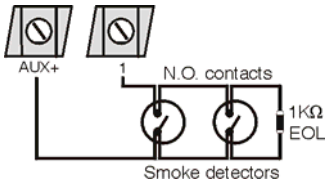

5.14.1 2-Wire Smoke Detector Reset (1738 only)

Perform the following to reset any 2-wire smoke detectors that are in alarm:

- If using a 1686H or 1686V keypad: Press and hold the [**PG**] key for three seconds.
- If using a 1689 LED, 1640 Icon LCD or a 1641 LCD keypad: Press and hold the [**FNC1**] / [•] key for three seconds.

6.1 Switch To Stay Arming

Section [133] = Partition 1, Section [134] = Partition 2
Option **[4]** OFF = Switch to Stay Arming Disabled (default)
Option **[4]** ON = Switch to Stay Arming Enabled

If a user Regular arms a partition, but does not exit through (open and close) an Entry Delay zone during the Exit Delay, the control panel can be programmed to switch from Regular Arming to Stay Arming.

6.2 Stay Arming with Delay

Section [133] = Partition 1, Section [134] = Partition 2
Option **[5]** OFF = Stay Arming with Delay Disabled (default)
Option **[5]** ON = Stay Arming with Delay Enabled

If a partition is Stay Armed when this feature is enabled, all the zones in the partition with the Stay option enabled (see *Stay Zones* on page 18), **except 24Hr. zones**, are associated with the Stay Delay. Therefore, the control panel will not generate an alarm if a zone is breached until the Stay Delay has elapsed. This feature prevents false alarms by allowing users enough time to disarm their system if a zone is accidentally triggered. For example, if a user opens an armed window or crosses an armed detector on the way to the kitchen in the middle of the night, the user will have enough time to disarm the system before the alarm is generated. Each partition's Stay Delay follows the value programmed in Entry Delay Timer 2 in section **[070]**.

6.3 Regular Arming switches to Force Arming

Section [131]: Arming/Disarming Options
Option **[2]** OFF = Regular Arming Switches to Force Arming Disabled (default)
Option **[2]** ON = Regular Arming Switches to Force Arming Enabled

With this feature enabled, the control panel will always Force arm instead of Regular arm when a valid User Access Code with the Force Arming Option is entered. In installations where the user must always Force arm when leaving the protected area, this feature allows users to Force arm without pressing the **[FORCE]** key before entering their User Access Code. This cannot be done using keyswitches. Force arming is not supported by keyswitches.
This feature is not to be used with UL installations.

6.4 Restrict Arming On Battery Fail

Section [130]: Arming/Disarming Options
Option **[5]** OFF = Permit arming on battery failure (default)
Option **[5]** ON = Restrict arming on battery failure

If this option is enabled, the control panel will not arm the system if the control panel detects that the backup battery is disconnected, that its fuse is blown, or that the battery voltage drops to less than 10.5V. The control panel will not arm the system until all battery trouble conditions are rectified.

6.5 Restrict Arming On Tamper Failure

Section [130]: Arming/Disarming Options
Option **[6]** OFF = Permit arming on tamper failure (default)
Option **[6]** ON = Restrict arming on tamper failure

If this option is enabled, the control panel will not arm the system if the control panel detects a tamper trouble on one or more zones. The control panel will not arm the system until all tamper trouble conditions are rectified.

This feature will not function if the Tamper Recognition Options (see page 25) are disabled or whenever the tampered zone is bypassed and the Tamper Bypass Options (see page 25) have been enabled.

6.6 Timed Auto-Arming

Section [133] = Partition 1, [134] = Partition 2
Option **[1]** OFF = Timed Auto-Arming Disabled (default)
Option **[1]** ON = Timed Auto-Arming Enabled

Each partition can be programmed to arm every day at the time specified by the Auto-Arm Timer. The Auto-Arming Options (see section 6.8) determine the partition's arming method. Any open zones detected when a partition is Auto-Armed will be bypassed regardless of their definition (except 24hr. zones). The control panel will enter a 60-second Exit Delay period before arming the system. At this point, Auto-Arming can be cancelled by entering a valid access code. Once the partition has successfully armed, the control panel can transmit the Timed Auto-Arming report code programmed in section **[172]**.

Example: *To automatically arm partition 2 everyday at 6:15PM, enable Timed Auto-Arming for partition 2 by turning on option **[1]** in section **[134]**. Then key in 18:15 into section **[112]**.*

6.6.1 Auto-Arm Timer

Section [111] = Partition 1, [112] = Partition 2
Select the section corresponding to the desired partition and program the time (use the 24-hour clock i.e. 6:30PM = 18:30) that you wish the control panel to attempt to arm the selected partition and/or send the Late to Close report code.

6.7 No Movement Auto-Arming

Section [133] = Partition 1, [134] = Partition 2
Option **[2]** OFF = No Movement Auto-Arming Disabled (default)
Option **[2]** ON = No Movement Auto-Arming Enabled

If no movement occurs in a partition's protected area for the period specified by the No Movement Timer (see below), the control panel can automatically arm that partition. The Auto-Arming Option described in section 6.8 of this manual determines the partition's arming method. Any open zones detected when a partition is Auto-Armed will be bypassed regardless of their definition (except 24hr. zones). Upon arming, the control panel will transmit the No Movement report code if programmed in section **[172]**. Regardless of whether the system was successfully armed or not, the control panel will always transmit the No Movement report code if programmed in section **[172]**. If No Movement Auto-Arming is disabled, the control panel will still send the No Movement report code at the time specified by the No Movement Timer.

Example: *To arm partition 1 whenever there is no movement for a period of 4 hours, enable No Movement Auto-arming for partition 1 by turning on the **[2]** Option in section **[133]**. Then in section **[075]** enter 016 (16x15min. = 240min. = 4 hours).*

6.7.1 No Movement Timer

Section [075] = Partition 1, [076] = Partition 2
001 to 255 x15min., Default = disabled

Select the section corresponding to the desired partition and program the interval of time without movement you wish the control panel to wait before arming and/or sending the No Movement report code. If No Movement Auto-Arming is disabled, the control panel can still send the No Movement report code when no movement has been detected for the period specified by the No Movement Timer.

6.8 Auto-Arming Options

Section [133] = Partition 1, [134] = Partition 2
Option **[3]** OFF = Regular Arming (default)
Option **[3]** ON = Stay Arming

When using Timed Auto-Arming or No Movement Auto-Arming (see section 6.6 and section 6.7), the control panel can Regular or Stay Arm (see page 46) the selected partition. *This feature is not to be used with UL installations.*

6.9 One-Touch Arming

Section [130]: Options [1] to [4]
Option **[1]** ON = Press & hold the **[ENTER]** key for One-touch Regular Arming.
Option **[2]** ON = Press & hold the **[STAY]** key for One-touch Stay Arming.
Option **[3]** ON = Press & hold the **[FORCE]** key for One-touch Force Arming.
Option **[4]** ON = Press & hold the **[BYP]** key for One-touch Bypass Programming.

The One-touch Arming features allow users to arm the system without having to enter any access codes. To arm the system, press and hold the appropriate key (see above) for approximately 2 seconds. If the system is partitioned (see page 38), you must also press the key corresponding to the partition you wish to arm. For more information on the different arming methods, please refer to page 46. *This feature is not to be used with UL installations*

6.10 Exit Delay

Section [071] = Partition 1, [072] = Partition 2
001 to 255 seconds, Default = 30 seconds

After entering the required arming sequence (i.e. User Access code, etc.), the Exit Delay parameter determines the amount of time a user has to leave the protected area before the control panel arms the partition. The Exit Delay applies to all zones in the selected partition. When enabled, the keypad will beep once every second during the Exit Delay and will beep rapidly during the final 10 seconds of the Exit Delay. *Max 60 seconds for UL listed systems*.

6.10.1 Beep On Exit Delay

Section [130]: Arming/Disarming Options
Option **[8]** OFF = Beep on Exit Delay Disabled
Option **[8]** ON = Beep on Exit Delay Enabled (default)

6.11 Bell Squawk On Arm/Disarm With Keypad

Section [130]: Arming/Disarming Options
Option **[7]** OFF = Bell Squawk on Arm/Disarm Disabled (default)
Option **[7]** ON = Bell Squawk on Arm/Disarm Enabled

When this feature is enabled, the bell or siren will squawk once upon arming and twice upon disarming.

6.12 Bell Squawk On Arm/disarm with Remote Control

Section [131]: Arming/Disarming Options
Option **[3]** OFF = Bell Squawk on Arm/Disarm with Remote Control Disabled (default)
Option **[3]** ON = Bell Squawk on Arm/Disarm with Remote Control Enabled

When this feature is enabled, the bell or siren will squawk once upon arming with a remote control and twice upon disarming with a remote control. Must be enabled for UL installations.

6.13 No Exit Delay When Arming with Remote Control

Section [131]: Arming/Disarming Options
Option **[4]** OFF = Provides Exit Delay When Arming with a Remote Control (default)
Option **[4]** ON = No Exit Delay When Arming with a Remote Control

When the option is enabled, the panel cancels the Exit Delay (arms instantly) when a partition is armed with a remote control. When disabled, the Exit Delay timer will start when a partition is armed with a remote control.

6.14 No Exit Delay Beeps and No Bell Squawk When Stay Arming

Section [131]: Arming/Disarming Options
Option **[5]** OFF = No Exit Delay Beeps and No Bell Squawk When Stay Arming Disabled (default)
Option **[5]** ON = No Exit Delay Beeps and No Bell Squawk When Stay Arming Enabled

With this feature enabled, the control panel will prevent the bell or siren from squawking and the keypads from beeping during the Exit Delay, whenever a partition is Stay Armed.

Part 7: Alarm Options

7.1 Bell Cut-Off Timer

Section [073] = Partition 1, [074] = Partition 2
000 = Disabled, 001 to 255 minutes, Default = 4 min.

After an audible alarm, the bell or siren will stop upon disarming of the partition or when the Bell Cut-Off Timer has elapsed, whichever comes first. *Min. 5 minutes for ULC installations*.

7.2 Recycle Alarm

After the Bell Cut-Off Timer and the Recycle Delay have elapsed, the control panel will re-verify the zone status. If there are any open zones, the control panel will generate another alarm. In one armed period, the control panel will repeat this sequence the number of times defined by the Recycle Counter.

7.2.1 Recycle Alarm Delay

Section [090]
000 = disabled, 001 to 255 minutes, Default = disabled

The Recycle Delay determines the amount of time after Bell Cut-Off that the control panel will wait before re-verifying zone status.

7.2.2 Recycle Counter

Section [091]
000 = disabled, 001 to 255, Default = disabled

The Recycle Counter determines the number of times the control panel will re-verify the zone status after Bell Cut-Off in one armed period.

7.3 Tamper Recognition

Section [132]: Zone Options

[1] OFF / **[2]** OFF: *Tamper Recognition Disabled (default)*
If the system is armed or disarmed, the control panel will display the zone as open in the keypad display, but will not generate an alarm. This option is not permitted on UL systems.

[1] OFF / **[2]** ON: *Trouble Only*
If the system is armed and a tamper wiring failure occurs on a zone, the control panel will follow the zone's Alarm Types setting (see page 18). **If the system is disarmed** and a tamper wiring failure occurs on a zone, a Tamper/ Zone Wiring Failure will appear in the keypads' Trouble Display (see page 44) and the control panel will transmit the appropriate Zone Tamper report code (see page 29).

[1] ON / **[2]** OFF: *Silent Alarm*
If the system is armed and a tamper wiring failure occurs on a zone, the control panel will follow the zone's Alarm Types setting (see page 18). **In a disarmed system**, it functions the same as the Trouble Only setting, but it will also generate a silent alarm. A silent alarm will not trigger any bells or sirens, but the system will have to be disarmed.

[1] ON / **[2]** ON: *Audible Alarm*
In an armed system and a tamper wiring failure occurs on a zone, the control panel will follow the zone's Alarm Types setting (see page 18). **In a disarmed system**, it functions the same as Trouble Only setting, except it will also generate an audible alarm.

7.3.1 Tamper Bypass Options

Section [132]: Zone Options
Option **[3]** OFF = Will generate a tamper if detected on a bypassed zone (default)
Option **[3]** ON = Tampers on bypassed zones will be ignored

With option **[3]** on, the Tamper Recognition feature follows the zone bypass definition. This means the control panel will ignore any tampers detected on a bypassed zone. With option **[3]** off, Tamper Recognition ignores the bypass definition. This means the control panel will generate an incident as per Tamper Recognition settings if a tamper or wire fault occurs on a bypassed zone.

7.4 Keypad Panic Options

Section [128]: General Options

Option **[1]** OFF = Emergency Panic Disabled (default)
Option **[1]** ON = Emergency Panic Enabled
Pressing the **[1]** and **[3]** keys simultaneously on the keypad for 2 seconds will generate a silent or audible alarm as defined by option **[4]**.

Option **[2]** OFF = Auxiliary Panic Disabled (default)
Option **[2]** ON = Auxiliary Panic Enabled
Pressing the **[4]** and **[6]** keys simultaneously on the keypad for 2 seconds will generate a silent or audible alarm as defined by option **[5]**.

Option **[3]** OFF = Fire Panic Disabled (default)
Option **[3]** ON = Fire Panic Enabled
Pressing the **[7]** and **[9]** keys simultaneously on the keypad for 2 seconds will generate a silent or audible alarm as defined by option **[6]**.

Option **[4]** OFF = Emergency Panic is Silent (default)
Option **[4]** ON = Emergency Panic is Audible

Option **[5]** OFF = Auxiliary Panic is Silent (default)
Option **[5]** ON = Auxiliary Panic is Audible

Option **[6]** OFF = Fire Panic is Silent (default)
Option **[6]** ON = Fire Panic is Pulsed

Silent alarm:
The control panel emits a confirmation beep and transmits the appropriate Panic report code if programmed in section **[195]**. The control panel will not enable the keypad buzzers or the control panel's BELL output (no audible alarm).

Audible alarm:
Same as silent alarm, except the keypad buzzers and the BELL output will activate until a user cancels the alarm (disarms) with a valid User Access Code or when the Bell Cut-Off Timer elapses (see page 25).

Fire (pulsed) alarm:
Same as audible operation, except that the BELL output will be pulsed as shown in Figure 14 on page 17.

Whether the system is partitioned or not, the control panel will report all panic alarms to partition 1.

7.5 Panic Lockout Timer

Section [094]

When a panic alarm is activated, the control panel can ignore the disarm signal from a remote control (see the SPC-319 Wireless Bus Module Reference & Installation Manual) for a specified period. This prevents an aggressor from disarming the system by remote control during a panic situation. In section **[094]** enter a 3-digit value (000 to 255, 000 = disabled) representing the number of seconds that the remote controls will be locked out of the system.

Part 8: Reporting and Dialer settings

The following section explains all the features and options that must be programmed in order for your security system to properly report system events to a monitoring station. When an event (e.g. zone in alarm) occurs in the system, the control panel verifies if a report code was programmed in the section corresponding to the event (except Ademco Contact ID “All Codes”). If a report code was programmed, the control panel will dial the monitoring station telephone number defined by the Event Call Direction feature. When the monitoring station answers, the control panel will transmit the System Account Code, followed by the programmed Report Code.

Figure 19: Event Reporting

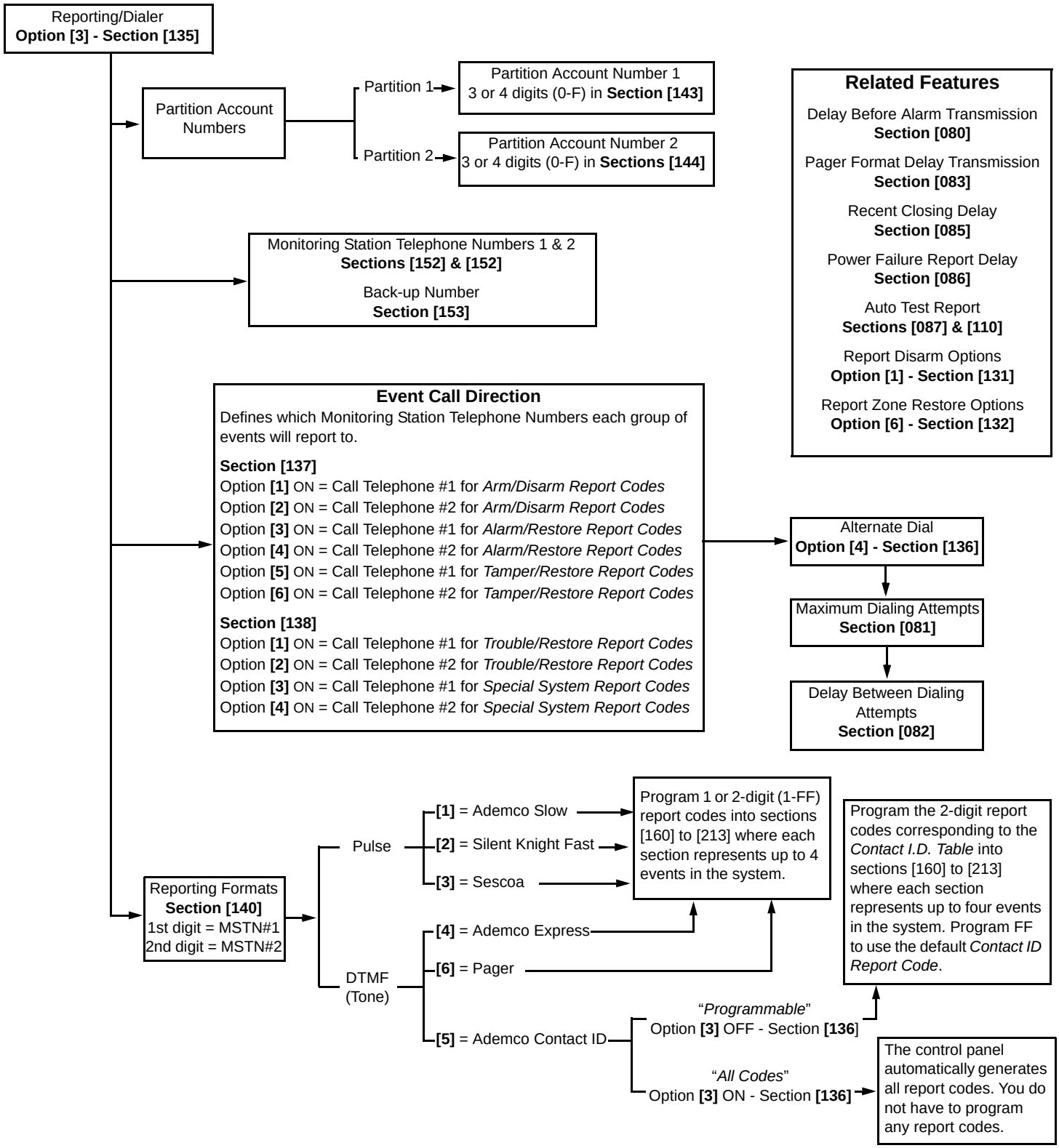

8.1 Reporting/Dialer (Enable/Disable)

Section [135]: Dialer Options
Option **[3]** OFF = Reporting/Dialer Disabled (default)
Option **[3]** ON = Reporting/Dialer Enabled

8.2 Report Codes

A report code is a 1- or 2-digit hexadecimal value consisting of digits from 1 to F. Each section from **[160]** to **[213]** represents a set of up to four specific events and each of these events can be programmed with a separate 1- or 2-digit report code.

Only the Ademco Slow, Silent Knight, Sescoa and Pager Formats support 1-digit report codes. To program a 1-digit report code, press the [FORCE] key followed by the desired hexadecimal digit or vice versa.

When a specific event occurs, the control panel will attempt to transmit the programmed report code to the monitoring station. The method of report code transmission is defined by the Reporting Formats (see page 31) and the Event Call Direction (see page 32). These two items define how and where the report codes are transmitted. If you are using the Ademco Contact ID "All Codes" format, sections **[160]** to **[213]** do not have to be programmed. For more information, refer *Reporting Formats* on page 31. The following sub-sections provide a brief description of the events that the control panel can report.

8.2.1 Arming Report Codes

Sections [160] to [171]
A report code can be programmed for each of the 48 User Access Codes. When using an access code to arm a partition, the control panel can send the appropriate report code to the monitoring station, identifying which access code was used to arm the partition.

8.2.2 Special Arming Report Codes

Sections [172] and [173]
Whenever the system is armed using one of the special arming features listed below, the control panel can send the appropriate report code to the monitoring station identifying how the system was armed.

Section [172]
- **TIMED AUTO-ARMING**: A partition has armed itself at the programmed time (see page 23).
- **LATE TO CLOSE**: Reports every day at the time specified by the Auto-Arm Timer (see page 23).
- **NO MOVEMENT**: A partition has armed itself after the programmed period without movement (see No Movement Arming on page 23).
- **PARTIAL ARMING**: A partition was Stay, Instant or Force Armed or armed with Bypassed zones.

Section [173]
- **ONE-TOUCH ARMING**: A partition was armed using a One-touch Arming feature (see page 24).
- **REMOTE ARMING**: A partition was armed using the Winload software.
- **KEYSWITCH ARMING**: A partition was armed using a keyswitch (see page 17).
- **CLOSING DELINQUENCY** (1728 V2.40 and higher only): Partition 1 has not been armed within a set period of time (see page 34).

8.2.3 Disarming Report Codes

Sections [174] to [185]
A report code can be programmed for each of the 48 User Access Codes. Whenever an access code is used to disarm an armed partition or a partition in alarm, the control panel can send the appropriate report code to the monitoring station, identifying which access code was used to disarm the partition.

The Disarming and the Special Disarming report codes can be transmitted every time a partition is disarmed or only when a partition is disarmed after an alarm (see *Disarm Reporting Options* on page 35).

8.2.4 Special Disarming Report Codes

Section [186]
Whenever using one of the special disarming features, the control panel can send the report code to the monitoring station, identifying how the system was disarmed.

- **CANCEL AUTO-ARM**: A partition is disarmed during the Timed Auto-Arm's 60-second Exit Delay (see page 23). Only reports if Disarming Reporting Options (see *page 35*) are set to always report disarming.
- **REMOTE DISARM**: System is disarmed using the Winload software.
- **KEYSWITCH DISARMING**: System disarmed using a keyswitch (see page 17).
- Future use

8.2.5 Zone Alarm Report Codes

Sections [187] to [190]

A report code can be programmed for each of the 16 available zones. Whenever a zone generates an alarm, the control panel can send the appropriate report code to the monitoring station, identifying which zone generated an alarm.

8.2.6 Zone Alarm Restore Report Codes

Sections [191] to [194]

A report code can be programmed for each of the 16 available zones. The control panel can transmit these report codes to the monitoring station identifying which zone was restored.

A zone is restored when it closes after generating an alarm or once the bell has cut-off after alarm generation. Please refer to Zone Restore Report Options on page 35.

8.2.7 Special Alarm Report Codes

Sections [195] and [196]

Whenever the system generates an alarm due to one of the conditions listed below, the control panel can send the appropriate report code to the monitoring station identifying the type of alarm.

Section [195]

- **EMERGENCY PANIC**: Panic keys **[1]** and **[3]** have been pressed (see page 26).
- **AUXILIARY PANIC**: Panic keys **[4]** and **[6]** have been pressed (see page 26).
- **FIRE PANIC:** Panic keys **[7]** and **[9]** have been pressed (see page 26).
- **RECENT CLOSING**: Reports when an alarm is generated after arming the system within period defined by the Recent Close Delay (see page 34).

Section [196]

- **AUTO ZONE SHUTDOWN**: A zone communicates more than the programmed number of transmissions in a single armed period (see page 18).
- **DURESS**: A Duress access code is keyed in (see page 12).
- **KEYPAD LOCKOUT**: If a consecutive number of invalid codes are entered into a keypad, the control panel can be set to deny access from all keypads for a specified period.
- Future use

8.2.8 Zone Tamper Report Codes

Section [197] to [200]

A report code can be programmed for each of the 16 available zones. Whenever a tamper or wire fault occurs on a zone, the control panel can send the appropriate report code to the monitoring station identifying which zone was tampered.

8.2.9 Zone Tamper Restore Report Codes

Sections [201] to [204]

A report code can be programmed for each of the 16 available zones. Whenever a tampered zone is restored, the control panel can send the appropriate report code to the monitoring station identifying which zone has been restored.

If Tamper Recognition (see page 25) is disabled, the control panel will not report the occurrence of any tampers, wire faults or tamper restores.

8.2.10 System Trouble Report Codes

Section [205] to [207]

Whenever the system generates one of the instances listed below, the control panel can send the appropriate report code to the monitoring station identifying the type of system trouble.

Section [205]

- Future use
- **AC FAILURE**: The control panel has detected a loss of AC power. Transmission of this report code can be delayed (see Power Failure Report Delay on page 34).
- **BATTERY FAILURE**: backup battery is disconnected or battery voltage is ≤10.5V.
- **AUXILIARY SUPPLY**: Auxiliary power supply has overloaded (current consumption is >1.1A).

Section [206]

- **BELL OUTPUT OVERLOAD**: Bell/siren output has overloaded (see page 5).
- **BELL OUTPUT DISCONNECTED**: Devices connected to the Bell Output have been disconnected.
- **TIMER LOSS**: The control panel has detected a loss in time or clock failure (see page 38)
- **FIRE LOOP TROUBLE**: The control panel has detected a tamper trouble on a fire zone.

Section [207]

- **WIRELESS LOW BATTERY**: The battery voltage of a Liberator or Magellan wireless transmitter (motion detector or contact switch) has dropped below recommended limits.
- **MODULE FAULT**: Will report if all keypads connected to the control panel have been disconnected or if a module with its corresponding supervision option enabled in the control panel (see pages 40 and 41) is disconnected.
- **PRINTER FAULT**: An error has occurred on the Printer Bus Module.
- **FAIL TO COMMUNICATE**: The control panel has failed all attempts to communicate with the monitoring station. The report code will be transmitted upon the next successful attempt.

8.2.11 System Trouble Restore Report Codes

Sections [208] to [210]

Whenever the system restores one of the troubles listed in section 8.2.10, the control panel can send the appropriate report code to the monitoring station identifying the type of system trouble restore. If Telephone Line Monitoring is enabled (see page 35), the control panel can also transmit a TLM Restore report code.

8.2.12 Special Reporting Codes

Sections [211] to [213]

Whenever the system generates one of the instances listed below, the control panel can send the appropriate report code to the monitoring station identifying the type of system occurrence.

Section [211]

- **COLD START**: The control panel was completely shutdown (no battery, no AC) and then was re-started.
- **TEST REPORT**: A test report has been generated automatically (see page 34).
- Not available
- **PC EXIT**: The control panel has ended communication with WinLoad.

Section [212]

- **INSTALLER IN**: Installer has entered the programming mode.
- **INSTALLER OUT**: Installer has exited the programming mode.
- Future use
- Future use

Section [213]

- **TX SUPERVISION LOSS**: Wireless Transmitter Supervision (see SPC-319 Instruction Sheet) has been enabled and a transmitter is no longer communicating with the system.
- **TX SUPERVISION RESTORE**: Reports when the above trouble has been restored
- Future use
- Future use

8.3 Monitoring Station Telephone Numbers

Section [151] = Phone#1, [152] = Phone#2, [153] = Backup Phone#: Up to 32 digits

The Spectra Control Panels can dial up to 2 different monitoring station telephone numbers. You can enter any digit from 0 to 9 and any special keys or functions (see Table 6) up to a maximum of 32 digits. For more information on how these telephone numbers are used, please refer to *Event Call Direction* on page 32 and *Reporting Formats* on page 31. After the Maximum Dialing Attempts (see page 33) to one monitoring station telephone number have failed, the control panel will then dial the backup telephone number. If the Alternate Dial Option (see page 34) is

enabled, the control panel will dial the programmed backup telephone number after every failed attempt. If no backup telephone number is programmed, the control panel will never report to the backup telephone number. Also refer to *Delay Between Dialing Attempts* on page 34.

Table 6: Special Keys for Telephone Numbers

Press	Action or Value
[STAY]	*
[BYP]	#
[MEM]	switch from pulse to tone dialing or vice versa
[TBL] or **[TRBL]**	4-second pause
[FORCE]	deletes current digit
[PG] or **[FNC1]**	inserts blank space

8.4 Partition Account Numbers

Section [143] = Partition 1, [144] = Partition 2

All report codes are preceded by a 4-digit or 3-digit Partition Account Number to ensure correct identification in a partitioned system. Partition account numbers can be any hexa-digit from 1 to F. To enter a 3-digit account number, simply press the **[FORCE]** key followed by the 3-digit account number. Also, when using 3-digit account numbers, you must use 1-digit report codes.

8.5 Reporting Formats

Section [140]: 1st digit = Format for Phone #1, 2nd digit = Format for Phone #2

The Spectra Control Panels can use a number of different reporting formats and each Monitoring Station Telephone Number can be programmed with a different reporting format. The first digit entered into section **[140]** represents the reporting format used to communicate with Monitoring Station Telephone Number 1, the second digit represents the reporting format used to communicate with Monitoring Station Telephone Number 2. The Backup Telephone Number uses the same reporting format as the last Monitoring Station Telephone Number that was dialed. ***UL Note:*** *The installer is required to verify the complete compatibility of the DAC Receiver and formats at least once per year.*

Table 7: Reporting Formats

Value Entered	Reporting Format
1	Ademco Slow (1400Hz, 1900Hz, 10BPS)
2	Silent Knight Fast (1400Hz, 1900Hz, 10BPS)
3	SESCOA (2300Hz, 1800Hz, 20BPS)
4	Ademco Express (DTMF 4+2)
5 (Default)	Ademco Contact ID
6	Pager Format

If Hexadecimals (0 to FF) are used to program the report codes, verify that the pager also supports Hexadecimals. If the pager does not support Hexadecimals, use only the digits 0 to 9.

8.5.1 Standard Pulse Formats

The Spectra Control Panels can use the Ademco slow, Silent Knight and Sescoa standard pulse reporting formats (see Table 7).

8.5.2 Ademco Express

The Ademco Express is a high-speed reporting format, which will transmit the 2-digit (11 to FF) report codes programmed into sections **[160]** to **[213]**. Unlike other Ademco formats, the Ademco Express does not use the Contact ID Report Codes.

8.5.3 Ademco Contact ID

Ademco Contact ID is a fast communicator format that uses tone reporting instead of pulse reporting. This communicator format also uses a pre-defined list of industry standard messages and report codes that will

suit most of your basic installation needs. Please refer to the Contact ID Report Codes List in the Programming Guide for a complete list of these report codes and messages.

8.5.4 Contact ID Options

Section [136]: Dialer Options
Option **[3]** OFF = Programmable Codes
Option **[3]** ON = All Codes (default)

When using the Programmable Codes format, use the Ademco Contact ID Report Codes List in the Spectra System Programming Guide (version 2.0 or higher) to program the desired report codes into sections **[160]** to **[213]**. Enter FF to use the default Contact ID Report Codes. Press the **[FORCE]** key to enter a 0 value. When using the All Codes format, the control panel will automatically generate Contact ID Report Codes for every event in sections **[160]** to **[213]**. Refer to the *"All Codes" Ademco Contact ID Report Code List* in the *Spectra System Programming Guide*.

When using the Ademco Contact ID Programmable format, both telephone numbers must use this reporting format.

8.5.5 Pager Reporting Format

Section [136]: Dialer Options
[6] OFF / **[7]** OFF: 1 call to the pager/cellular telephone
[6] OFF / **[7]** ON: 2 calls to the pager/cellular telephone
[6] ON / **[7]** OFF: 3 calls to the pager/cellular telephone
[6] ON / **[7]** ON: 4 calls to the pager/cellular telephone

Using this format allows the control panel to transmit report codes to a pager or a cellular telephone. Since the control panel cannot confirm whether the transmission was successful or not, it can be programmed to call the pager or cellular telephone up to four times and transmit the report codes each time. To ensure that the report is received, the control panel transmits the account number, the report code and the # sign four times during each call. Also, refer to the Pager Delay in section 8.7.

8.6 Pager Format Transmission Options (1728 V2.40 and higher)

Section [136]: Dialer Options
Option **[8]** OFF = Transmit code after delay (default)
Option **[8]** ON = Transmit code immediately

The Pager Reporting Format can be configured to transmit immediately or to transmit after a pager delay has elapsed. With option **[8]** ON, the control panel immediately transmits (personal dialing) the report code(s) to a pager or a cellular telephone. The Pager delay in section **[083]** becomes the length of time that the control panel will continue to transmit the report code(s) to a pager or a cellular phone, giving someone a chance to answer and hear the call. With option **[8]** OFF, the control panel will transmit the report code(s) to a pager or cellular telephone only after the Pager Delay has elapsed.

8.7 Pager Delay

Section [083]
001 to 255 seconds, default = 5 seconds

When using the Pager Reporting Format (see section 8.5.5), the control panel will wait for the Pager Delay period before transmitting the report codes. This is to allow time for the pager system to provide a dial tone or to bypass the "welcome" message before sending data.

8.8 Event Call Direction

Section [137]
Option **[1]** ON = Call Telephone #1 for
Option **[2]** ON = Call Telephone #2 for
→ Arm/Disarm Report Codes in sections [160] to [186]

Option **[3]** ON = Call Telephone #1 for
Option **[4]** ON = Call Telephone #2 for
→ Alarm/Restore Report Codes in sections [187] to [196]

Option **[5]** ON = Call Telephone #1 for
Option **[6]** ON = Call Telephone #2 for
→ Tamper/Restore Report Codes in sections [197] to [204]

Section [138]
Option **[1]** ON = Call Telephone #1 for
Option **[2]** ON = Call Telephone #2 for
→ Trouble/Restore Report Codes in sections [205] to [210]

Option **[3]** ON = Call Telephone #1 for
Option **[4]** ON = Call Telephone #2 for
→ Special Report Codes in sections [211] to [213]

This feature determines where each group of events will be reported. The control panel events are divided into five groups (see above) where each event group can be programmed to dial one or both Monitoring Station Telephone Numbers. When a reportable event occurs in the system, the control panel will verify that one of the two telephone numbers has been enabled. The control panel will begin by dialing the selected telephone number(s). If both numbers were selected it will begin with Monitoring Station Telephone Number 1. After the Maximum Dialing Attempts (see page 33) to one monitoring station telephone number have failed, the control panel will then dial the backup telephone number. If the Alternate Dial Option (see page 34) is enabled, the control panel will dial the programmed backup telephone number after every failed attempt. If no backup telephone number is programmed, the control panel will never report to the backup telephone number. Also, refer to *Delay Between Dialing Attempts* on page 34.

Example: *The system is armed and zone 1 has been breached causing an alarm. If option **[3]** is off and option **[4]** is on in section **[137]**, the control panel will attempt to communicate with Monitoring Station Telephone Number 2 in order to transmit the Zone 1 Alarm Report Code programmed in section **[187]**.*

8.9 Dialing Method

Section [135]: Dialer Options
Option **[4]** OFF = Pulse Dialing. (Also, refer to Pulse Ratio)
Option **[4]** ON = Tone/DTMF Dialing (default)

8.10 Pulse Ratio

Section [135]: Dialer Options
Option **[5]** OFF = European Pulse Ratio of 1:2
Option **[5]** ON = U.S.A. Pulse Ratio of 1:1.5 (default)

When using Pulse dialing, you can select one of two Pulse Ratios. Although most European countries use the 1:2 pulse ratio, the 1:1.5 ratio may provide better results in some cases. The same applies for North American countries. If the 1:1.5 pulse ratio is not providing the desired results, the 1:2 ratio may be used.

8.11 Bell on Communication Failure

Section [135]: Dialer Options
Option **[6]** OFF = Bell On Communication Failure Disabled (default)
Option **[6]** ON = Bell On Communication Failure Enabled

If the control panel fails to communicate with the monitoring station when the system is armed, it will enable the BELL output, setting off any bells or sirens connected to the output.

8.12 Dial Tone Delay

Section [136]: Dialer Options
Option **[5]** OFF = Dialer will continue to dial if no dial tone is present after 4 seconds (default).
Option **[5]** ON = Dialer will hang-up if no dial tone is present after 16 seconds

8.13 Maximum Dialing Attempts

Section [081]
001 to 016 attempts, Default = 8 attempts

The value programmed in section **[081]** determines how many times the control panel will re-dial the same Monitoring Station Telephone Number before proceeding to the next number.

8.14 Delay Between Dialing Attempts

Section [082]
000 to 255 seconds, Default = 20 seconds

This delay determines the amount of time the control panel will wait between each dialing attempt.

8.15 Alternate Dial Option

Section [136]: Dialer Options
Option **[4]** OFF = Alternate Dial Disabled (default)
Option **[4]** ON = Alternate Dial Enabled

With option **[4]** off, the control panel will dial the backup telephone number programmed in section **[153]** after all attempts to one Monitoring Station Telephone Number have failed (see section 8.13). With option **[4]** on, the control panel will dial the backup telephone number after every failed attempt.

8.16 Recent Close Delay

Section [085]
000 to 255 seconds, Default = no delay

If after having armed the system, an alarm is generated within the period defined by the Recent Close Delay, the control panel will attempt to transmit the Recent Close report code programmed in section **[195]**.

8.17 Auto Test Report

Section [087]
000=disabled, 001 to 255 days, Default = disabled
Section [110]: Time (HH:MM)

The control panel will transmit the Test Report report code programmed into section **[211]** after the number of days programmed into section **[087]** has elapsed at the time programmed into section **[110]**. Use the 24-hour clock to program the time (i.e. 6:30PM = 18:30). The first Test Report will be transmitted within 24 hours after the feature is enabled at the time programmed in **[110]**.

Example: *Section **[087]** = 005 and section **[110]** = 13:00. The first Test Report will be sent at 1 PM that day and then the report will be sent every 5 days at 1 PM.*

8.18 Closing Delinquency Timer (1728 V2.40 and higher)

Section [095]
000=disabled, 001 to 255 days, Default = disabled

At midnight everyday, Spectra verifies when partition 1 was last disarmed. If the partition has not been armed within the time programmed in the Closing Delinquency Timer, Spectra transmits a “Closing Delinquency” report code to the monitoring station.

Example: *The Closing Delinquency Timer for partition 1 in section **[095]** is programmed for 005 days. Spectra verifies when partition 1 was last disarmed at midnight everyday. If partition 1 was not armed within in the last five days, Spectra will transmit a “Closing Delinquency” event to the monitoring station.*

The Closing Delinquency Event and timer apply only to partition 1.

8.19 Power Failure Report Delay

Section [086]
001 to 255 minutes, Default = 15 minutes

The control panel will transmit the AC Failure report code programmed in section **[205]** after the Power Failure Report Delay period has elapsed.

8.20 Disarm Reporting Options

Section [131]: Arming /Disarming Options
Option **[1]** OFF = Always Report Disarming
Option **[1]** ON = Report Disarming Only After Alarm (default)

With option **[1]** off, the control panel will send the Disarming report codes (see page 28) to the monitoring station every time the system is disarmed. With option **[1]** on, the control panel will send the Disarming report codes to the monitoring station when the system is disarmed following an alarm.

8.21 Zone Restore Report Options

Section [132]: Zone Options
Option **[6]** OFF = Report On Bell Cut-Off (default)
Option **[6]** ON = Report On Zone Closure

With option **[6]** off, the control panel will send the Zone Alarm Restore report codes (see page 29) to the monitoring station when the zone has returned to normal and the Bell Cut-Off Timer has elapsed (see page 25). With option **[6]** on, the control panel will send the Zone Alarm Restore report codes to the monitoring station as soon as the zone returns to normal or when the system is disarmed.

8.22 Telephone Line Monitoring (TLM)

When enabled, the system verifies the existence of a telephone line once every second. A line test failure occurs when the TLM detects less than 3V for the period defined by the TLM Fail Timer. If the line test fails, the control panel's STATUS LED flashes and generates one or more conditions as defined by the TLM settings below. These will be restored when the control panel detects the telephone line again. Please note that when the dialer detects an incoming call, the TLM test will stop for 1 minute.

Section [135]: Dialer Options
[1] OFF / **[2]** OFF: *TLM Disabled*

[1] OFF / **[2]** ON: *Trouble Only*
Upon line test failure, a TLM Trouble will appear in the keypads' Trouble Display (see page 44).

[1] ON / **[2]** OFF: *Alarm If System Armed*
Upon line test failure, a TLM Trouble will appear in the keypads' Trouble Display (see page 44) and if the system is armed, the control panel will generate an alarm.

[1] ON / **[2]** ON: *Silent Alarm Becomes Audible*
Upon line test failure, a TLM Trouble will appear in the keypads' Trouble Display (see page 44) and causes a silent zone or silent panic alarm to switch to audible.

8.22.1 TLM Fail Timer

Section [079]
016 to 255 x 2 seconds, Default = 32 seconds

If TLM does not detect the existence of a telephone line for the duration of this period, the control panel will generate the condition(s) defined by the TLM options (see above).

Part 9: Programmable Outputs

A PGM is a programmable output that switches to its opposite state (i.e. a normally open PGM will close) when a specific event has occurred in the system. For example, a PGM can be used to reset smoke detectors, activate bells or strobe lights, open/close garage doors and much more. When a PGM closes, the control panel supplies a ground to the PGM activating any device or relay connected to it. When a PGM opens, the circuit opens from ground, therefore, cutting power to any devices connected to it.

PGM1
1728: A programmable output that provides up to 150mA. Refer to *PGMs for 1728* on page 5.
1738: A programmable output that provides up to 1A. Refer to *Alarm Relay and PGMs for 1738* on page 5.

PGM2
1728: A programmable output that provides up to 150mA. Refer to *PGMs for 1728* on page 5.

1738: PGM2 is a programmable output that can provide up to 1A. PGM2 is designed to be used as a Strobe Output. For information refer to *PGM Strobe Options* on page 37. For connections, refer to *Alarm Relay and PGMs for 1738* on page 5.

Global PGM

The Global PGM allows you to use the control panel's PGM Event List to activate PGMs located on a module or LCD keypad. For example, if you enable a module's "Follows Global PGM" option, the PGM on the module will activate whenever the event programmed in section **[124]** occurs. Every PGM on every keypad and/or expansion bus module can be programmed to follow the event(s) defined by the Global PGM.

9.1 PGM Activation Event

Sections [120], [122], and [124]

This feature allows you to program the control panel to activate a PGM when a specific event occurs in the system. The PGM will remain in its active state until the programmed PGM Deactivation Event occurs or when the PGM Delay period elapses (see page 36). For the Event List see the PGM Table in the *Spectra System Programming Guide.* To program a PGM Activation Event:

1) Enter section that represents the desired PGM. PGM1 = **[120]**, PGM2 = **[122]**, Global PGM = **[124]**
2) Enter the **Event Group #**.
3) Enter the **Sub-Group #**.
4) Enter the **Partition #**
   01 = Partition 1
   02 = Partition 2
   99 = Both Partitions

The "AC Loss" PGM Event will only occur after the Power Failure Report Delay elapses (see page 34).

9.2 PGM Deactivation Event

Sections [121], [123], [125]

After PGM activation, the PGM will return to its normal state (deactivate) when the programmed PGM Deactivation Event occurs. Instead of deactivating the PGM when a specific event occurs, the PGM can deactivate after a programmed period elapses (see *PGM Delay* below*)*. For the Event List see the PGM Table in the *Spectra System Programming Guide.* ***If using the PGM Delay, these sections can be used as a second activation event.***

1) Enter section that represents the desired PGM. PGM1 = **[121]**, PGM2 = **[123]**, Global PGM = **[125]**
2) Enter the **Event Group #**.
3) Enter the **Sub-Group #**.
4) Enter the **Partition #** (**01** = Partition 1; **02** = Partition 2; **99** = Both Partitions)

9.3 PGM Delay

Section [066] = PGM1, [067] = PGM2, [068] = Global PGM

001 to 255 seconds, 000 = Follows Deactivation Event, Default = 5 seconds

Instead of deactivating the PGM on the occurrence of a specific event, the PGM will deactivate after the period programmed here has elapsed.

If a PGM Delay is programmed, the deactivation event can be used as a second activation event.

9.4 PGM Normal State

Section [126]: Options [4], [5] and [6]

A PGM toggles to its opposite state (i.e. a normally open PGM will close) when a specific event has occurred in the system. You can program each PGM output to be normally open (N.O.) or normally closed (N.C.) by enabling or disabling options **[4]**, **[5]** and **[6]** in section **[126]**.

Option **[4]** OFF = PGM1 Normally Open (Default)
Option **[4]** ON = PGM1 Normally Closed

Option **[5]** OFF = PGM2 Normally Open (Default)
Option **[5]** ON = PGM2 Normally Closed

Option **[6]** OFF = Global PGM Normally Open (Default)
Option **[6]** ON = Global PGM Normally Closed

9.5 PGM2 Strobe Options

Section [129]: General Options

Option **[1]** OFF = PGM2 Output is Steady (Default)
Option **[1]** ON = PGM2 Output is Pulsed (Strobe)
With option **[1]** enabled, PGM2 will flash on and off whenever activated. Otherwise, it will provide a steady output.

Option **[2]** OFF = Disable PGM2 Pulse When System is Armed (Default)
Option **[2]** ON = Enable PGM2 Pulse When System is Armed
Whenever the system is armed, PGM2 will flash once every 30 seconds until the system is disarmed.

Option **[3]** OFF = Disable PGM2 Pulse on Arm/Disarm (Default)
Option **[3]** ON = Enable PGM2 Pulse on Arm/Disarm Enabled
With this option enabled, PGM2 will flash once to indicate the system has been armed and will flash twice to indicate that the system has been disarmed.

9.6 Alarm Relay Options (1738 Only)

Section [127]: General Options

Option **[7]** OFF = Alarm Relay Follows Bell Output (Default)
Option **[7]** ON = Alarm Relay Follows Global PGM

With this option off, the optional Alarm Relay will activate or deactivate whenever the Bell Output activates or deactivates. With the option on, the Alarm Relay will activate or deactivate whenever Global PGM activates or deactivates.

Part 10: System Settings

10.1 Hardware Reset

Performing a hardware reset will set all control panel settings to factory default except for the Panel ID and PC Password. Also, the event buffer will **not** be erased. To perform a power down reset:

1) Make sure the Installer Lock is disabled (see below)
2) Remove battery and AC power from the control panel.
3) Set the RESET jumper to on by placing a jumper on the RESET pins of the control panel.
4) Re-connect AC and battery power to the control panel.
5) Wait 10 seconds and remove the jumper.

10.2 Installer Lock

Section [282]

000 = Disabled, 147 = Lock Enabled, Default = Disabled

Program 147 into section **[282]** to lock all programming. Performing a hardware reset will not affect the current panel settings. To remove the Installer Lock, enter 000. Please note that four seconds after resetting the control panel the STATUS LED on the control panel will flash fast for 5 seconds to indicate that the installer lock is enabled.

10.3 Keypad Lockout Feature

Sections [092] and [093]

If a consecutive number of invalid codes are entered into a keypad, the control panel can be set to deny access from all keypads for a specified period and send the report code programmed in section **[196]**. Program the number of consecutive invalid codes from 001 to 255 (000 = disabled) into section **[092]**. Program the duration of the Keypad Lockout from 001 to 255 minutes into section **[093]**. If 000 is programmed in section **[093]**, the keypads will not be locked-out, but the report code programmed in section **[196]** will be sent.

10.4 Battery Charge Current (1738 only)

Section [127]: General Options
Option **[5]** OFF = Battery Charge Current: 350mA (default)
Option **[5]** ON = Battery Charge Current: 700mA (40VA transformer required)

The backup battery can only be recharged at 350mA if connected to a 1728 control panel.

10.5 Partitioning

Section [127]: General Options
Option **[1]** OFF = Partitioning Disabled (default)
Option **[1]** ON = Partitioning Enabled

The Spectra system is equipped with a partitioning feature which can divide the alarm system into two distinct areas identified as Partition 1 and Partition 2. Partitioning can be used in installations where shared security systems are more practical, such as an office/warehouse building. When partitioned, each zone, each User Code (see *User Code Options* on page 11) and some of the system's features can be assigned to Partition 1, Partition 2 or both (see *Zone Partition Assignment* on page 18). ***If the system is not partitioned, all User Codes and features will be recognized as belonging to Partition 1.***

- Users can only arm partitions to which they have been assigned.
- Only zones assigned to Partition 1 will arm/disarm when Partition 1 is armed or disarmed.
- Only zones assigned to Partition 2 will arm/disarm when Partition 2 is armed or disarmed.
- Zones assigned to both partitions will arm when both partitions are armed and will disarm when at least one disarms.
- The following features can be programmed separately for each partition: Entry/Exit Delay Timer, Auto-Arming Options, Bell Cut-Off Timer, Switch to Stay Arming, PGM Events and Account Numbers.

If the system is not partitioned, all zones, User Codes, and features will be recognized as belonging to partition 1. Zones that have been manually assigned to partition 2 will no longer function.

10.6 System Real-Time Clock

Section [280]
Program the current time into section **[280]** using the 24-hour clock (i.e. 8:30PM = 20:30).

10.7 Clock Adjust

Section [088]
000 = Disabled, 001 to 255, Default = Disabled
001 to 127 = + 1 to +127 seconds
128 to 255 = -1 to -127 seconds

If you notice a gain or loss in control panel time, calculate the average gain or loss per day and program the opposite amount in order to automatically correct the time setting every 24 hours.

Example: *If a control panel loses 4 minutes per month, this represents an average loss of 8 seconds per day. Therefore, programming 008 (plus 8 seconds) into section* ***[088]*** *would compensate for the 8-second loss.*

10.8 Keypad Tamper Supervision

Section [128]: General Options
Option **[7]** OFF = Keypad 1 Tamper Supervision Disabled (default)
Option **[7]** ON = Keypad 1 Tamper Supervision Enabled

Option **[8]** OFF = Keypad 2 Tamper Supervision Disabled (default)
Option **[8]** ON = Keypad 2 Tamper Supervision Enabled

The control panel can be programmed to monitor the on-board tamper status of one or two keypads in the system. If Keypad 1 Tamper Supervision is enabled, the control panel will verify the on-board tamper status of the keypad with its Keypad Zone set as keypad zone 1. If Keypad 2 Tamper Supervision is enabled, the control panel will verify the on-board tamper status of a keypad with its Keypad Zone set as keypad zone 1. Ensure that the keypad's on-board anti-tamper switch is enabled. (For more information on LED keypads, see *Configuring the LED Keypads* on page 9.

For more information on LCD keypads, see the appropriate keypad manual.)

Regardless of whether the keypad zones are being used or not, if more than one keypad is set with the same keypad zone number, Keypad Tamper Supervision will be lost for that keypad zone. For example, if two of the keypads in your system have the keypad zones defined as keypad zone 1, the control panel will not recognize a Keypad 1 Tamper Supervision Failure.

If a keypad tamper occurs, the control panel can transmit the appropriate Zone Tamper report code (see page 29) as originating from the zones specified by the Table 8. If the zone (as specified by Table 8 below) is enabled, the control panel will report the tamper as originating from the partition where the zone is assigned. If the zone is not enabled, the control panel will send the Zone Tamper report code as originating from partition 1. A Tamper/Zone Wiring Failure will also appear in the keypads' Trouble Display (see page 44).

Table 8: Zone Tamper Report Code for Keypad Tamper Supervision Failure

Keypad Tamper	1728	1738 NO ATZ	1738 WITH ATZ
Keypad 1 Tamper Supervision =	Zone 6	Zone 8	Zone 15
Keypad 2 Tamper Supervision =	Zone 7	Zone 9	Zone 16

When Reassign Keypad Zone 2 is enabled (see page 14), the Keypad Tamper Supervision for keypad zone 2 is lost. Therefore, Keypad Tamper Supervision will* ONLY *function on Keypad Zone 1.

10.9 Keypad Audible Trouble Warning

Section [127]: General Options
Option **[3]** OFF = Keypad Beep on Trouble Disabled
Option **[3]** ON = Keypad Beep on Trouble Enabled (default)

When enabled, the keypads emit an intermittent beep tone whenever a trouble condition occurs in the system. The intermittent beep tone remains activated until the user enters the Trouble Display by pressing the **[TBL]** or **[TRBL]** key. The intermittent beeps will re-initialize whenever a new trouble occurs or the trouble restores and re-occurs.

10.10 Confidential Mode

Section [126] Options [1], [2] and [3]
Option **[1]** OFF = Confidential Mode Disabled (default)
Option **[1]** ON = Confidential Mode Enabled

Option **[2]** OFF = Keypads activate when an access code is entered
Option **[2]** ON = Keypads activate when a key is pressed (default)

Option **[3]** OFF = Confidential Mode Timer is 2 minutes
Option **[3]** ON = Confidential Mode Timer is 5 seconds (default)

If Confidential Mode is enabled and no actions are performed on the keypads for the time defined by the Confidential Mode Timer, all the keypads' LEDs will be off and LCD screens will show "Paradox Security" until either a key is pressed or an access code is entered. When the system exits Confidential Mode, the keypads will display the system's status. Confidential Mode is activated by enabling option **[1]**. Option **[2]** regulates whether the keypads will be activated at the touch of a key or only when an access code is entered. Option **[3]** determines the amount of time without action before the system enters Confidential Mode (5 seconds or 2 minutes).

10.11 Installer Quick Functions Keys

After entering the Installer Code, you can press a key to perform specific actions as described below.

10.11.1 Installer Test Mode

[ENTER] + [INSTALLER CODE] + [TBL] OR [TRBL]
The Installer Test Mode allows you to perform walk tests where the bell or siren will squawk and the keypad will emit a confirmation beep to indicate opened zones. To enter this mode, simply enter the Installer Code then press the **[TBL]** or **[TRBL]** key. The keypad will emit a confirmation beep. To disable this mode, press the **[TBL]** key again. The keypad will emit a rejection beep.

10.11.2 Test Report

[ENTER] + [INSTALLER CODE] + [MEM]
Sends the Test Report report code programmed in section **[211]** to the monitoring station (see *Reporting and Dialer settings* on page 27).

10.11.3 Call WinLoad Software

[ENTER] + [INSTALLER CODE] + [BYP]
Refer to page 43.

10.11.4 Cancel Communication

[ENTER] + [INSTALLER CODE] + [STAY]
Cancels all communication until the next reportable event.

10.11.5 Answer WinLoad Software

[ENTER] + [INSTALLER CODE] + [FORCE]
Refer to page 43.

10.12 4-Output Bus Module* Supervision

Section [129]: General Options
Option **[7]** OFF = 4-Output Bus Module Supervision Disabled (default)
Option **[7]** ON = 4-Output Bus Module Supervision Enabled

By enabling this option, the control panel will supervise the 4-Output Bus Module (APR3-PGM4) connected to the Spectra bus. This means that whenever the 4-Output Bus Module is disconnected or is not communicating with the control panel, the control panel will attempt to transmit the Module Fault report code programmed in section **[210]** and the Module Loss Failure will appear in the keypads' Trouble Display (see page 44).

Modules with the APR- prefix are compatible with Spectra (versions 2.0 and higher) and Digiplex (DGP-848). Modules with the APR3- prefix are compatible with Spectra (versions 2.0 and higher) and Digiplex (DGP-848 and DGP-NE96). **The 4-Output Bus Module is not UL listed.*

10.13 Printer Bus Module Supervision

Section [129]: General Options
Option **[8]** OFF = Printer Bus Module Supervision Disabled (default)
Option **[8]** ON = Printer Bus Module Supervision Enabled

By enabling this option, the control panel will supervise the Printer Bus Module (APR3-PRT1) connected to the Spectra bus. This means that whenever the Printer Bus Module is disconnected or is not communicating with the control panel, the control panel will attempt to transmit the Module Fault report code programmed in section **[210]** and the Module Loss Failure will appear in the keypads' Trouble Display (see page 44).

Modules with the APR- prefix are compatible with Spectra (versions 2.0 and higher) and Digiplex (DGP-848). Modules with the APR3- prefix are compatible with Spectra (versions 2.0 and higher) and Digiplex (DGP-848 and DGP-NE96).

10.14 Zone Expansion Bus Module* Supervision

Section [129]: General Options
Option **[4]** OFF = Zone Expansion Bus Module Supervision Disabled (default)
Option **[4]** ON = Zone Expansion Bus Module Supervision Enabled

By enabling this option, the control panel will supervise the 4- or 8-Zone Expansion Bus Module (SPC/APR3-ZX4 or SPC/APR3-ZX8) connected to the Spectra bus. This means that whenever the Zone Expansion Bus Module is disconnected or is not communicating with the control panel, the control panel will attempt to transmit the Module Fault report code programmed in section **[210]** and the Module Loss Failure will appear in the keypads' Trouble Display (see page 44).

Modules with the APR- prefix are compatible with Spectra (versions 2.0 and higher) and Digiplex (DGP-848). Modules with the APR3- prefix are compatible with Spectra (versions 2.0 and higher) and Digiplex (DGP-848 and DGP-NE96). * *The Zone Expansion Bus Module is not UL listed.*

10.15 Wireless Bus Module Supervision

Section [129]: General Options
Option **[5]** OFF = Wireless Bus Module Supervision Disabled (default)
Option **[5]** ON = Wireless Bus Module Supervision Enabled

By enabling this option, the control panel will supervise the Wireless Bus Module (MG-RCV3) connected to the Spectra bus. This means that whenever the Wireless Bus Module is disconnected or is not communicating with the control panel, the control panel will attempt to transmit the Module Fault report code programmed in section **[210]** and the Module Loss Failure will appear in the keypads' Trouble Display (see page 44).

10.16 Wireless Transmitter Low Battery Supervision

Section [129]: General Options
Option **[6]** OFF = Wireless Transmitter Low Battery Supervision Disabled (default)
Option **[6]** ON = Wireless Transmitter Low Battery Supervision Enabled

When option **[6]** in section **[129]** is enabled and the battery voltage of a wireless transmitter (motion detector or contact switch) has dropped below recommended limits, the control panel will attempt to transmit the Wireless Transmitter Low Battery report code programmed in section **[210]** and the Wireless Transmitter Low Battery Failure will appear in the keypads' Trouble Display (see page 44).

10.17 Wireless Transmitter Supervision Options

Section [132]: Zone Options
Please note that the *Supervision Option* on the 900MHz Wireless Bus Module must be enabled (see section 10.15).

[7] OFF / **[8]** OFF: *Supervision Failure Recognition Disabled (default)*
When a tamper occurs on a wireless transmitter zone **in a disarmed system,** the control panel will display the zone as open in the keypad display, but will not generate an alarm. When it occurs on **in an armed system**, the control panel will follow the zone's Alarm Types setting (see page 18). This option is not permitted on UL systems.

[7] OFF / **[8]** ON: *Trouble Only*
When a tamper occurs on a wireless transmitter zone **in a disarmed system**, a Wireless Transmitter Supervision Loss will appear in the keypads' Trouble Display (see page 44) and the control panel will attempt to transmit the TX Supervision Loss report code programmed in section **[213]**. When it occurs on **in an armed system**, the control panel will follow the zone's Alarm Types setting (see page 18).

[7] ON / **[8]** OFF: *Silent Alarm*
When a tamper occurs on a wireless transmitter zone **in a disarmed system**, it functions the same as the Trouble Only setting, but it will also generate a silent alarm. A silent alarm will not trigger any bells or sirens, but the system will have to be disarmed. **In an armed system**, the control panel will follow the zone's Alarm Types setting (see page 18).

[7] ON / **[8]** ON: *Audible Alarm*
When a tamper occurs on a wireless transmitter zone **in a disarmed system**, it functions the same as the Trouble Only setting, except it will also generate an audible alarm. **In an armed system**, the control panel will follow the zone's Alarm Types setting (see page 18).

10.17.1 Restrict Arming on Supervision Loss

Section [131]: Arming/Disarming Options
Option **[6]** OFF = Disabled (default)
Option **[6]** ON = Restrict Arming on Wireless Transmitter Supervision Loss

The control panel will not allow users to arm the system if it receives a Supervision Loss signal. Please note that the Wireless Transmitter Supervision Options (see section 10.17) must be enabled. The control panel will not arm any partition until all Supervision Loss trouble conditions are rectified.

10.17.2 Supervision Bypass Options

Section [131]: Arming/Disarming Options
Option **[7]** OFF = Generate Supervision Loss if detected on a Bypassed Wireless Transmitter Zone (default)
Option **[7]** ON = No Supervision Loss if Detected on a Bypassed Wireless Transmitter Zone

When this feature is enabled, the Wireless Transmitter Supervision Options will follow the zone's bypass definition. This means the control panel will not perform any action if a Supervision Loss occurs on a bypassed zone. When this feature is disabled, the Wireless Transmitter Supervision Options will ignore the bypass definition. This means the control panel will generate an incident as per Wireless Transmitter Supervision Options if a supervision loss occurs on a bypassed zone.

10.18 Reprogram All Expansion Modules

Section [750]

After removing an expansion bus module from the communication bus, the control panel keeps the module's programmed sections in memory. Therefore, if you add or replace a module or when you have downloaded the contents of the Paradox Memory Key (see *Programming Using A Paradox Memory Key* on page 10), you can reprogram the modules with the settings saved in the control panel. To do so, enter section **[750]** and press **[ENTER]**. The keypad will emit 2 beeps every second while downloading.

Part 11: Settings for WinLoad Software

11.1 Panel Answer Options

The following two options define how the control panel answers an incoming call from a computer using the WinLoad Software for Windows®.

11.1.1 Answering Machine Override

Section [077]

000 = Disabled, 010 to 255 seconds, Default = disabled

When using the WinLoad software to communicate remotely with an installation site that uses an answering machine or service, the answering machine override must be programmed. Using the WinLoad software you will call the control panel, hang up, then call back. If the installation site is called back within the programmed delay period, the control panel will override the answering machine or service by picking-up the line after the first ring on the second call. You must wait at least 10 seconds before attempting the second call, otherwise, the control panel will think it is the same call. For details on how to use the WinLoad software, refer to the WinLoad Help Manual.

Example: *A security installation is using an answering machine set to answer after three rings. If section* ***[077]*** *has been programmed with 040 (40 seconds) and the second call is made within 40 seconds, the control panel will pick up the line on the first ring. If it takes more than 40 seconds, the control panel will not answer on the first ring and the answering machine will answer after three rings.*

11.1.2 Number of Rings

Section [078]

000 = disabled, 001 to 015 rings, Default = 8 rings

This value represents the number of rings the control panel will wait before picking-up the line. If the line is not answered after the number of programmed rings, the control panel will answer the call. You must wait at least 10 seconds before attempting the second call or the control panel will think it is the same call.

11.2 Panel Identifier

Section [141]

0000 to FFFF

This 4-digit code identifies the control panel to the WinLoad software before initiating communication. The control panel will verify that the Panel Identifier in the WinLoad software is the same. If the codes do not match, the control panel will not establish communication. Therefore, be sure to program the same panel identifier into both the Spectra control panel and the WinLoad software.

11.3 PC Password

Section [142]
0000 to FFFF

This 4-digit password identifies the PC to the panel before establishing communication. Program the same PC Password into both the Spectra control panel and the WinLoad software. If the passwords do not match, the WinLoad software will not establish communication.

11.4 PC Telephone Number

Section [150]
Up to 32 digits

The control panel will dial this number when trying to initiate communication with a computer using the WinLoad software. You can enter any digit from 0 to 9 and any special keys or functions (see Table 6 on page 31) up to a maximum of 32 digits.

11.5 Call WinLoad Software

[ENTER] + [INSTALLER CODE] + [BYP]
The control panel will dial the PC Telephone Number programmed in section **[150]** in order to communicate with the WinLoad software. The control panel and the WinLoad software will verify that the Panel Identifier and the PC Password match before establishing communication.

11.6 Answer WinLoad Software

[ENTER] + [INSTALLER CODE] + [FORCE]
In order to perform on-site upload/download connect your computer directly to the control panel using an ADP-1 line adapter. In the WinLoad software set Dialing Method to Blind Dial. Program the panel telephone number in WinLoad software and follow the instructions on the ADP-1 adapter. When the computer has dialed, press **[ENTER]** followed by the Installer Code, then press the **[FORCE]** key to manually answer the WinLoad software from the control panel.

11.7 Auto Event Buffer Transmission

Section [136]: Dialer Options
Option **[2]** OFF = Auto Event Buffer Transmission Disabled (default)
Option **[2]** ON = Auto Event Buffer Transmission Enabled

When the event buffer reaches 50% capacity, the control panel will make two attempts to establish communication with a PC using the WinLoad software by calling the PC Telephone Number programmed in section **[150]**. The WinLoad software must be in Wait to Dial mode. When the system establishes communication, it will upload the contents of the event buffer to the WinLoad software. If communication is interrupted before completing transmission or if after two attempts communication is not established, the system will wait until the Event Buffer attains another 50% capacity before attempting to re-communicate with the monitoring station. When the Event Buffer is full, each subsequent new event will erase the oldest event in the buffer.

11.8 Call Back WinLoad

Section [136]: Dialer Options
Option **[1]** OFF = Call Back WinLoad Disabled (default)
Option **[1]** ON = Call Back WinLoad Enabled

For additional security, when a PC using the WinLoad software attempts to communicate with the control panel, the control panel can hang up and call the PC back in order to re-verify identification codes and re-establish communication. When the control panel hangs up, the WinLoad software automatically goes into Wait for Call mode, ready to answer when the control panel calls back. Please note that the PC Telephone Number must be programmed in section **[150]** in order to use the Call Back feature.

12.1 Trouble Display

The Spectra system continuously monitors fourteen possible trouble conditions. When a trouble condition occurs, the **[TBL]** key or **[TRBL]** indicator will illuminate on the LED keypads or “Trouble” will appear on the LCD keypad’s screen. Press the **[TBL]** or **[TRBL]** key to switch to the Trouble Display. The **[TBL]** key or **[TRBL]** indicator will flash and lights corresponding to an existing trouble condition will illuminate on the LED keypads (see Table 9 below) or the appropriate trouble message will appear on the LCD keypad. Press the **[CLEAR]** key to exit the Trouble Display.

Please note that the keypad can be programmed to emit a BEEP every 5 seconds whenever a new trouble condition has occurred. Pressing the **[TBL]** or **[TRBL]** key will stop the beeping.

Table 9: Trouble List

LED #	Description	Details
[1]	No/Low Battery Failure	The control panel performs a dynamic battery test under load every 60 seconds. This trouble indicates that the back up battery is disconnected or that the battery should be replaced, as it will not provide adequate current in case of AC loss. This trouble will also appear when the control panel is running on battery power and the battery voltage has dropped to 10.5V or lower. This means the battery must be recharged or replaced.
[2]	Wireless Transmitter Low Battery	The battery voltage of a wireless transmitter has dropped below recommended limits. If connected to a SPC-319, press **[2]** to view the zones that are generating this trouble. If connected to a Magellan receiver (MG-RCV3), the trouble will be displayed as a global trouble. To determine the zones generating the trouble, examine the Low Battery LED indicators on all the transmitters. The batteries should be replaced.
[3]	Power Failure	Upon power failure, the AC LED on all keypads will turn off. The control panel can transmit the report code programmed in section **[205]**. This report code can be delayed by programming a Power Failure Report Delay in section **[086]**. The AC LED turns back on as soon as power is restored.
[4]	Bell Disconnected	This trouble occurs when a bell or siren is not connected to the bell output terminals. If you are not using the BELL terminals, connect a 1KΩ resistor across the bell output.
[5]	Maximum Bell Current	The BELL output uses a fuseless circuit and will automatically shut down if the current exceeds 3A. After opening the short or reducing the load, the bell current is restored upon the following alarm generation. This trouble indicator will only appear when a condition has occurred that would activate the bell output (e.g. during an alarm).
[6]	Maximum Auxiliary Current	The auxiliary output uses a fuseless circuit to protect the power supply against current overload and automatically shuts down if the current exceeds 1.1A. After opening the short or reducing the load, the panel will restore power to the auxiliary output.
[7]	Communicator Report Fail	The control panel has failed all attempts to communicate with the monitoring station.
[8]	Timer Loss	The control panel’s internal clock must be re-programmed. To re-program the timer press the **[8]** key followed by the current time using the 24-hour clock (i.e. 8:30PM = 20:30).
[9]	Tamper/Zone Wiring Fail	If the Tamper Recognition options are enabled (see page 25), this trouble indicates a wiring problem on one or more zones or that the cover has been removed on one or more wireless transmitters. To provide line short recognition the zone connections must have EOL resistors. If you press the **[9]** key, the keypad will display which zones are in trouble. Enter the Installer Code to clear Tamper troubles.

Table 9: Trouble List

LED #	Description	Details
[10]	Telephone Line Monitoring	If the Telephone Line Monitoring (TLM) feature is enabled (see section **[135]**), this trouble indicates that the control panel has not detected the presence of a telephone line for 30 seconds.
[STAY] or [11]	Fire Loop Trouble	Indicates a wiring problem on a Fire Zone. Press **[STAY]** to view the zones that are generating this trouble.
[FORCE] or [16]	Keypad Fault	If the keypad is no longer communicating with the control panel, the **[TBL]** or **[TRBL]** will flash, the **[FORCE]** key will illuminate (the LCD keypad displays "Keypad Fault") and the keypad will emit four consecutive beeps at 5-second intervals. Press any key on the keypad to terminate the "beeping" sequence. When communication has been restored, the system will revert to previous status.
[BYP] or [12]	Module Loss	A bus module is no longer communicating with the control panel. The module's supervision option must be enabled **[129]**.
[MEM] or [13]	Wireless Transmitter Supervision Loss	One or more wireless transmitters are no longer communicating with the receiver. If you press the **[MEM]** key, the keypad will display which zones are in trouble.

12.2 Programming Access Codes

Access Codes are personal identification numbers that allow you to enter certain programming modes, arm or disarm your system as well as activate or deactivate PGMs. The Spectra security system supports the following:

System Master Code arms or disarm partitions using any arming method and can create, modify or delete any User Access Code. Only the System Master Code can modify or delete User Access Codes assigned to both partitions.

Master Code 1 is permanently assigned to partition 1 and can be used to create, modify or delete User Access Codes that are assigned to partition 1.

Master Code 2 is permanently assigned to partition 2 (except when partitioning is disabled, Master Code 2 will be assigned to partition 1) and can be used to create, modify or delete User Access Codes that are assigned to the same partition.

45 *User Access Codes* (including 1 Duress code)

How Do I Program Access Codes?

1) Press **[ENTER]**
2) Key in the **[SYSTEM MASTER CODE]** or **[MASTER CODE]**
3) Key in 3-digit **[SECTION]** (see Table on page 45)
4) Key in new 4- or 6-digit **[ACCESS CODE]**
   [ENTER] *flashes. Return to step 3*

How Do I Delete Access Codes?

1) Repeat steps 1 to 3 (see above)
2) Press the **[FORCE]** key once for each digit in the access code (4 or 6 times) until the keypad emits a confirmation beep

Section	User Codes
[001]	User Code 001 = System Master Code
[002]	User Code 002 = Master Code 1
[003]	User Code 003 = Master Code 2
[004] to [047]	User Code 004 to User Code 047
[048]	User Code 048 or Duress Code

12.3 Disarming & Deactivating an Alarm

To disarm an already armed system or to deactivate an alarm, simply key in a valid access code. Program a designated entry/exit point, such as the front door or the garage door with an Entry Delay Timer. When these entry/exit point are opened (breached), it will set off a timer. The system will not generate an alarm until this timer elapses, giving users enough time to enter the premises and disarm the system. Any user can disarm the system, except users have been assigned the Arm Only Option.

How Do I Disarm the System or Deactivate an Alarm?

1) Key in your **[ACCESS CODE]***
   The arm or alarm indication will turn off and the keypad will emit a confirmation beep.

***If You Have Access To Both Partitions**:
Press the key corresponding to the partition you wish to Disarm, or to Disarm both partitions, press the **[1]** key then after the confirmation beep press the **[2]** key.

12.4 Regular Arming

This method, commonly used for day-to-day arming, will arm all the zones in the selected partition. If you make a mistake, the keypad will emit a rejection beep. When you have correctly armed the system, the appropriate ARM indication will turn on and the Exit Delay will be initiated. Please note that Regular Arming can also be activated through Auto-Arming, Keyswitch Arming or One-Touch Arming.

How Do I Regular Arm?

1) Green READY indicator must be illuminated. Unless the system is partitioned, in which case all zones in the desired partition must be closed.
2) Key in a valid **[ACCESS CODE]***

***If You Have Access To Both Partitions**:
Press the key corresponding to the partition you wish to arm. To arm both partitions, press the **[1]** key then after the confirmation beep press the **[2]** key.

12.5 Stay Arming

This method allows users to remain in the protected area while partially arming the system. For example, when going to sleep at night, entry/exit points like doors and windows can be armed while other zones like motion detectors remain deactivated. Please note that Fire Zones cannot be bypassed.

How Do I Stay Arm?

1) All zones in the desired partition (except Stay Zones) must be closed.
2) Press the **[STAY]** key
3) Key in a valid **[ACCESS CODE]***

***If You Have Access To Both Partitions**:
Press the key corresponding to the partition you wish to Stay Arm. To Stay Arm both partitions, press the **[1]** key then after the confirmation beep press the **[2]** key.

If you make a mistake, the keypad will emit a rejection beep. When you have correctly Stay Armed the system, the appropriate ARM or STAY indication appears and the Exit Delay is initiated. Stay Arming can also be activated using Auto-Arming, Keyswitch Arming or One-Touch Arming. The User Code must have the Stay Arming Option enabled.

12.6 Instant Arming

After Stay Arming the system and during its Exit Delay, press and hold the **[STAY]** key for 3 seconds**.** You should hear a confirmation beep. This will switch all armed zones to Instant zones.

If you have access to both partitions:
To Instant Arm one partition, press **[STAY]** + **[ACCESS CODE]** + Select Partition + **[CLEAR]** + press & hold **[STAY]**
To Instant Arm both partitions, press **[STAY]** + **[ACCESS CODE]** + **[1]** + **[2]** + press & hold **[STAY]**

12.7 Force Arming

Force Arming allows users to rapidly arm the system, without having to wait for all zones in the system to be closed. Force Arming is commonly used when a motion detector is protecting the area occupied by a keypad. Therefore, when arming the system, if the motion detector is set as a Force Zone, the control panel will ignore the zone and allow users to arm the system even if the zone is open. Any open Force Zones at the time of arming will be considered deactivated by the control panel. If during this period a deactivated zone is closed, the control panel will revert that zone to active status, hence, will generate an alarm if breached. *UL Note: Not to be used with UL installations*

How Do I Force Arm?

1) All zones in the desired partition (except Force Zones) must be closed.
2) Press the **[FORCE]** key
3) Key in a valid **[ACCESS CODE]***

***If You Have Access To Both Partitions**:
Press the key corresponding to the partition you wish to Force Arm. To arm both partitions, press the **[1]** key then after the confirmation beep press the **[2]** key.

If you make a mistake, the keypad will emit a rejection beep. When correctly Force Armed, the appropriate arm indication appears and the Exit Delay will initiate. Please note that Force Arming can also be activated using One-Touch Force Arming. Also, note that the User Access Code must have the Force Arming Option enabled.

12.8 Manual Bypass Programming

Manual Bypass Programming allows users to program the alarm system to ignore (deactivate) specified zones the next time the system is armed. The Access Code must have the Bypass Programming Option enabled. Please note that Fire Zones cannot be bypassed. Manual Bypass Programming can also be activated using One-Touch Bypass Programming.

How do I Program Bypass Entries?

1) Press the **[BYP]** key.
2) Key in a valid **[ACCESS CODE]***
3) Select one or more **[ZONES]** you wish to bypass
4) Once you have entered the desired bypass entries, press the **[ENTER]** key to accept these entries.

***If You Have Access To Both Partitions**:
Press the key corresponding to the desired partition.

12.8.1 Bypass Recall Feature

After disarming the system, the control panel will erase the bypass entries. By using the Bypass Recall Feature, you can reinstate the previous bypass entries saved in memory. This eliminates the need to manually program the bypass entries every time you arm the system. The Access Code must have the Bypass Programming Option enabled.

How Do I Recall Bypass Entries?

1) Press the **[BYP]** key.
2) Key in your **[ACCESS CODE]***
3) Press the **[BYP]** key. *Previously bypassed zones will illuminate.*
4) Press the **[ENTER]** key.

***If You Have Access To Both Partitions**:
Press the key corresponding to the desired partition.

12.9 One-Touch Arming

One-touch Arming allows users to arm the system without using an access code. Simply press and hold a key. One-Touch Arming can be used to allow specific individuals like service personnel (i.e. cleaners, maintenance) to arm the system when leaving the protected area, without giving them access to any other alarm system operations.

One-Touch Regular Arming
Press and hold the **[ENTER]** key for 3 seconds* to arm all zones in the partition.

One-Touch Force Arming
Press and hold the **[FORCE]** key for 3 seconds* to bypass any open Force Zones.

One-Touch Bypass Programming
Press and hold the **[BYP]** key for 3 seconds* to access Bypass Programming Mode.

One-Touch Stay Arming
Press and hold the **[STAY]** key for 3 seconds* to arm all zones not defined as Stay Zones.

Fast Exit - When the system is already Stay Armed:
- *To Exit and Stay Arm:* Press and hold the **[STAY]** key for 3 seconds*. The system will switch to Exit Delay. At the end of the Exit Delay period, the system will return to Stay Arming.
- *To Exit and Regular Arm:* Press and hold the **[ENTER]** key for 3 seconds*. The system will switch to Exit Delay. At the end of the Exit Delay period, the control panel will switch to Regular Arming.
- *To Exit and Force Arm:* Press and hold the **[FORCE]** key for 3 seconds*. The system will switch to Exit Delay. At the end of the Exit Delay period, the control panel will switch to Force Arming.

***** If you have access to both partitions after activating a one-touch feature, press the key corresponding to the desired partition. To select both partitions, press the **[1]** key then after the confirmation beep press the **[2]** key.

12.10 Keyswitch Arming

A keyswitch can be used to arm and disarm the system. Assign the keyswitch to a specific partition and program the keyswitch to Stay or Regular Arm the assigned partition. Also program the keyswitch to function as a Maintained or Momentary keyswitch. To arm the system using a Maintained Keyswitch, set the keyswitch to the ON position. To disarm the system set the keyswitch to the OFF position. To arm the system using a Momentary Keyswitch, set the keyswitch to the ON position then turn it back to the OFF position. Repeating this sequence will disarm the system.

12.11 Panic Alarms

In case of emergency, the Spectra system provides up to three panic alarms. These panic alarms, if programmed, will immediately generate an alarm after pressing and holding two specific keys for two seconds, as described below.

Press and hold keys **[1]** and **[3]** for a panic alarm.
Press and hold keys **[4]** and **[6]** for a panic or medical alarm.
Press and hold keys **[7]** and **[9]** for a panic or fire alarm.

12.12 Auto-Arming

Each partition can be programmed to arm every day at the time specified by the Auto-Arm Timer or for the period specified by the No Movement Timer. The user can program the Auto-Arm Timer by using the System Master Code, Master Code 1 or Master Code 2. *Please note that the control panel will enter a 60-second Exit Delay period before arming the system. At this point, Auto-Arming can be cancelled by entering a valid access code.* ***UL Note:*** *Not to be used with UL installations.*

12.13 Alarm Memory Display

A record of all alarm situations that occur will be stored in memory. After disarming the system, pressing the **[MEM]** key will display which zones were in alarm during the alarm period. To exit the Alarm Memory Display, press the **[CLEAR]** key. The control panel will erase the contents of the alarm memory every time the system is armed.

12.14 Programming Chime Zones

Users can program which zones will be Chime Enabled. A Chime Enabled zone will cause the keypad to emit a rapid intermittent beep tone (BEEP-BEEP-BEEP-BEEP) advising the user every time it is opened. Each keypad must be Chime Programmed separately.

10-ZONE LED KEYPAD:
Press and hold any key from **[1]** to **[10]** for 3 seconds to activate or deactivate Chiming for zones 1 to 10. For example, press and hold the **[1]** key to enable chiming on zone 1. If after pressing and holding a key, the keypad

emits a confirmation beep, this means the chime feature has been enabled for that zone. If the keypad emits a rejection beep, this means the chime feature has been disabled for the corresponding zone.

16-ZONE LED KEYPAD:
Press and hold the **[9]** key. Enter the 2-digit (01 to 16) zone number(s). When the corresponding LED is on, the zone is chimed. When the corresponding LED is off, the zone is unchimed. When the desired zones are chimed, press **[ENTER]**.

LCD KEYPAD:
Press and hold the **[9]** key. Enter the 2-digit (01 to 16) zone number(s), or use the arrow keys to scroll through the zones. and when the appropriate zone is displayed, press the **[FNC1]** key. When the desired zones are chimed, press **[ENTER]**.

12.15 Keypad Muting

Press and hold the **[CLEAR]** key for 3 seconds to enable or disable keypad muting. When muted, the keypad will only beep when a key is pressed or when the keypad emits a rejection or confirmation beep. All other beep functions are disabled. ***UL Note:*** *Not to be used with UL installations*

12.16 Keypad Backlight (1686H and 1686V only)

The illumination level behind the keys can be modified to suit the user's needs. There are four backlight levels. The **[MEM]** key is used to set the desired level. Each consecutive push of the **[MEM]** key will increase the backlight level until the maximum level is reached. After reaching the maximum level, the backlight level will return to the lowest level and the whole process is repeated. To change the backlight level:

How do I Modify The Backlight?

1) Press and hold the **[MEM]** key for 3 seconds
2) The **[MEM]** key will illuminate
3) Press the **[MEM]** key to set the desired backlight level
4) Press **[CLEAR]** or **[ENTER]** to exit

FCC Warnings

IMPORTANT INFORMATION
This equipment complies with Part 68 of the FCC rules subpart D and CS-03. Inside the cover of this equipment is a label that contains, among other information, the FCC registration number of this equipment.

NOTIFICATION TO TELEPHONE COMPANY
Upon request, customer shall notify telephone company of particular line to which the connection will be made, and provide the FCC registration number and the ringer equivalence of the protective circuit.

FCC REGISTRATION NUMBER:5A7CAN-22633 - AL - E
RINGER EQUIVALENCE NUMBER:0.1B (U.S. & CANADA)
USOC JACK: RJ31X (USA), CA31A (CANADA)

TELEPHONE CONNECTION REQUIREMENTS
Except for telephone company provided ringers, all connections to the telephone network shall be made through standard plugs and telephone company provided jacks, or equivalent, in such a manner as to allow for easy, immediate disconnection of terminal equipment. Standard jacks shall be so arranged that, if plug connected thereto is withdrawn, no interference to operation of equipment at customer's premises which remains connected to telephone network shall occur by reason of such withdrawal.

INCIDENCE OF HARM
Should terminal equipment/protective circuitry cause harm to telephone network, telephone company shall, where practicable, notify customer that temporary disconnection of service may be required; however, where prior notice is not practicable, the telephone company may temporarily discontinue service if action is deemed reasonable in circumstances. In case of temporary discontinuance, telephone company shall promptly notify customer and will be given opportunity to correct the situation.

CHANGES IN TELEPHONE COMPANY EQUIPMENT OR FACILITIES
The telephone company may make changes in its communication facilities, equipment operations or procedures, where such actions are reasonably required and proper in its business. Should any such changes render customer's terminal equipment incompatible with the telephone company facilities, the customer shall be given adequate notice to effect the modifications to maintain uninterrupted service.

GENERAL
This equipment shall not be used on coin telephone lines. Connection to party line service is subject to state tariffs.

RINGER EQUIVALENCE NUMBER (REN)
The ren is useful to determine the quantity of devices that you may connect to your telephone line and still have all of those devices ring when your telephone number is called. In most, but not all areas, sum of the ren's of all devices connected to one line should not exceed five (5.0). To be certain of the number of devices that you may connect to your line, you may want to contact your local telephone company.

EQUIPMENT MAINTENANCE FACILITY
If you experience trouble with this telephone equipment, please contact facility indicated below for information on obtaining service or repairs. The telephone company may ask that you disconnect this equipment from network until problem is corrected or until you are sure that the equipment is not malfunctioning.

FCC PART 15, WARNINGS INFORMATION TO USER
This equipment has been tested and found to comply with the limits for Class B digital devices, pursuant to Part 15 of FCC rules. These limits are designed to provide reasonable protection against harmful interference in a residential installation. This equipment generates, uses and can radiate radio frequency energy, and, if not installed and used in accordance with the instructions, may cause harmful interference to radio communications. However, there is no guarantee that interference will not occur in a particular installation. If this equipment does cause harmful interference to equipment intermittently, the user is encouraged to try to correct the interference by one or more of the following measures: (1) re orient or relocate the receiving antenna; (2) increase the separation between the equipment and receiver; (3) connect the equipment to an outlet on a circuit other than the one to which the receiver is connected, or (4) consult the dealer or an experienced radio/tv technician for assistance.

CAUTION:
Changes or modifications not expressly approved by PARADOX SECURITY SYSTEMS could void the user's authority to operate the equipment.

WARRANTY
Paradox Security Systems Ltd. (“Seller”) warrants its products to be free from defects in materials and workmanship under normal use for a period of one year. Except as specifically stated herein, all express or implied warranties whatsoever, statutory or otherwise, including without limitation, any implied warranty of merchantability and fitness for a particular purpose, are expressly excluded. Because Seller does not install or connect the products and because the products may be used in conjunction with products not manufactured by Seller, Seller cannot guarantee the performance of the security system and shall not be responsible for circumstances resulting from the product’s inability to operate. Seller obligation and liability under this warranty is expressly limited to repairing or replacing, at Seller's option, any product not meeting the specifications. Returns must include proof of purchase and be within the warranty period. In no event shall the Seller be liable to the buyer or any other person for any loss or damages whether direct or indirect or consequential or incidental, including without limitation, any damages for lost profits, stolen goods, or claims by any other party caused by defective goods or otherwise arising from the improper, incorrect or otherwise faulty installation or use of the merchandise sold.

Notwithstanding the preceding paragraph, the Seller’s maximum liability will be strictly limited to the purchase price of the defective product. Your use of this product signifies your acceptance of this warranty.

BEWARE: Dealers, installers and/or others selling the product are not authorized to modify this warranty or make additional warranties that are binding on the Seller.

© 2002-2004 Paradox Security Systems Ltd. All rights reserved.
Specifications may change without prior notice. One or more of the following patents may apply: 6215399, 6111256, 5751803, 5721542, 5287111, 5119069, 5077549, 5920259, 5886632. Canadian and international patents may also apply. Spectra is a trademark or registered trademark of Paradox Security Systems Ltd. or its affiliates in Canada, the United States and/or other countries.

ATTACHMENT LIMITATION NOTICE

The Industry Canada label identifies certified equipment. This certification means that the equipment meets certain telecommunications network protective, operational and safety requirements. The Department does not guarantee the equipment will operate to the user's satisfaction.

Before installing this equipment, users should ensure that it is permissible to be connected to the facilities of the local telecommunications company. The equipment must also be installed using an acceptable method of connection. The customer should be aware that compliance with the above conditions may not prevent degradation of service in some situations.

Repairs to certified equipment should be made by an authorized Canadian maintenance facility designated by the supplier. Any repairs or alterations made by the user to this equipment, or equipment malfunctions, may give the telecommunications company cause to request the user to disconnect the equipment.

Users should ensure for their own protection that the electrical ground connections of the power utility, telephone lines and internal metallic water pipe system, if present, are connected together. This precaution may be particularly important in rural areas.

CAUTION: Users should not attempt to make such connections themselves, but should contact the appropriate electrical inspection authority, or electrician, as appropriate.

The Load Number (LN) assigned to each terminal device denotes the percentage of the total load to be connected to a telephone loop which is used by the device, to prevent overloading. The termination on a loop may consist of any combination of devices subject only to the requirement that the total of the Load Numbers of all of the devices does not exceed 100.

Industry Canada certification is only applicable to installation of devices which include transformers approved by the Canadian Standards Association (CSA).

RESTRICTIONS CONCERNANT LE RACCORDEMENT DE MATÉRIEL

L'étiquette d'Industrie Canada identifie le matériel homologué. Cette étiquette certifie que le matériel est conforme à certaines normes de protection, d'exploitation et de sécurité des réseaux de télécommunications. Le Ministère garantir toutefois pas que le matériel fonctionnera à la satisfaction de l'utilisateur.

Avant d'installer ce matériel, l'utilisateur doit s'assurer qu'il est permis de le raccorder aux installations de l'entreprise locale de télécommunication. De plus, le matériel doit être installé en suivant une méthode acceptable de raccordement. L'abonné ne doit pas oublier qu'il est possible que la conformité aux conditions énoncées ci-dessus n'empêchent pas la dégradation du service dans certaines situations.

Les réparations de matériel homologué doivent être effectuées par un centre de service d'entretien canadien autorisé désigné par le fournisseur. La compagnie de télécommunications peut demander à l'utilisateur de débrancher un appareil à la suite de réparations ou de modifications effectuées par l'utilisateur ou à cause d'un mauvais fonctionnement.

Pour sa propre protection, l'utilisateur doit s'assurer que tous les fils de mise à la terre de la source d'energie électrique, des lignes téléphoniques et des canalisations d'eau métalliques, s'il y en a, sont raccordés ensemble. Cette précaution est particulièrement importante dans les régions rurales.

AVERTISSEMENT: L'utilisateur ne doit pas tenter de faire ces raccordements lui-même; il doit avoir recours à une service d'inspection des installations électriques, ou à un électricien, selon le cas.

L'indice de charge (IC) assigné à chaque dispositif indique, pour éviter toute surcharge, le pourcentage de la charge totale qui peut être raccordée à un circuit téléphonique bouclé utilisé par ce dispositif. La terminaison du circuit bouclé peut être constituée de n'importe quelle combinaison de dispositifs, pourvu que la somme des indices de charge de l'ensemble des dispositifs ne dépasse pas 100.

La certification d'Industrie Canada s'applique seulement aux installations d'appareils utilisant un transformateur approuvé par l'Association Canadienne de Normalisation (CSA).

UL AND ULC WARNINGS

UL AND C-UL INSTALLATION NOTES

This equipment is UL listed in accordance with standard UL1023 (Household Burglar -- Alarm Systems Units), standard UL985 (Household Fire Warning Units) and standard UL1635 (Digital Alarm Communicator System Units). This equipment has the capability of being programmed with features not verified for use in UL installations. To stay within these standards, the installer should use the following guidelines when configuring the system:

- All components of the system should be UL listed for the intended application.
- If the system will be used for “Fire” detection, the installer should refer to NFPA Standards #72, Chapter 2. In addition, once installation is complete, the local fire authority must be notified of the installation.
- This equipment must be verified by a qualified technician once every three years.
- All keypads must use a tamper switch.
- Maximum allowed entry delay is 45 seconds.
- Maximum allowed exit delay is 60 seconds.
- Minimum 4 minutes for bell cut-off time.
- Bypass Recall does not comply with UL requirements.
- Do not connect the primary indicating device to a relay. The installer must use the bell output.
- To comply with UL985, the auxiliary power output should not exceed 200mA. Please refer to Table 2: Current Consumption Table on page 4.
- Do not connect the zone ground terminal with UL Listed products.
- For UL installations, the metallic enclosure must be grounded to the cold water pipe.
- All outputs are Class 2 or power-limited, except for the battery terminal.The Class 2 and power-limited fire alarm circuits shall be installed using CL3, CL3R, CL3P, or substitute cable permitted by the National Electrical Code, ANSI/NFPA 70.

RECOMMENDED:

- EOL resistor part #2011002000
- **For 1728, 1738 UL Installations:** Basler Electric BE156240CAA007 16.5Vac min. **40VA**
- 12vdc 4Ah rechargeable acid/lead or gel cell backup battery (YUASA model #NP7-12 recommended) for residential use. Use a 7Ah battery to comply with fire requirements.
- Wheelock 46T-12 siren

This equipment must be installed and maintained by qualified service personnel only.

Index

Numerics

24Hr. Buzzer Zone 16
24Hr. Delayed Fire Zone 17
24Hr. Standard Fire Zone 17
2-Wire Fire Zones 7
2-Wire Smoke Input 21

A

AC Power 4
Access Code Length 11
Access Code Programming 45
Access Codes 10
Account Numbers 31
Ademco Contact ID 31
Ademco Contact ID Options 32
Ademco Express 31
Adjust Clock 38
Alarm Memory Display 48
Alarm Options 25
Alarm Relay 5
Alarm Relay Options 37
Alarm Report Code Transmission, Delay 19
Alarm Types 18
Alternate Dial Option 34
Answer Upload/Download Software 40
Answer WinLoad Software 43
Answering Machine Override 42
Arm Only 12
Arming and Disarming Options 22
Arming Report Codes 28
ATZ Wiring Options 21
ATZ- Zone Doubling 20
Auto Event Buffer Transmission 43
Auto Force Arming 22
Auto Test Report 34
Auto Zone Shutdown 18
    Counter 18
Auto-Arming On No Movement 23
Auto-Arming On Time 23
Auto-Arming Options 23
Auxiliary Power 4

B

Backlight, Keypad 49
Battery Charge Current 38
Battery, Backup 4
Beep On Exit Delay 24
Beep On Trouble 39
Bell Cut-Off Timer 25
Bell on Communication Failure 33
Bell Output Connection 5
Bell Squawk On Arm/Disarm With Keypad 24
Bell Squawk On Arm/disarm with Remote Control 24
Burglary Zones, 24 Hr. 16
Buzzer Zone 16
Bypass Options, Supervision 41
Bypass Programming 47
Bypass Recall Feature 47
Bypass Zones 18

C

Call Back Feature 43
Call Upload/Download Software 40
Call WinLoad Software 43
Cancel Communication 40
Charge Current 38
Chime Zones 48
Clock Adjust 38
Closing Delinquency
    Report 28
    Timer 34
Configuring The LED Keypads 9
Connecting
    Bells or Sirens 5
    Double Zone Inputs 6
    Fire Zones 7
    Keypad Zones 7
    Keypads 7
    Keyswitches 7
    PGMs 5
    Single Zone Inputs 6
    Telephone Lines 4
Contact ID Options 32
Counter, Auto Zone Shutdown 18
Current Consumption Table 4

D

Data Display Mode 9
Delay Before Alarm Report Code Transmission 19
Delay Between Dialing Attempts 34
Delay Power Failure Report 34
Delay, Pager Report 32
Delayed Fire Zone 17
Delinquency
    Report 28
    Timer 34
Dial Tone Delay 33
Dialer settings 27
Dialing Attempts 33
Dialing Method 33
Disarm Reporting Options 35
Disarming 46
Double Zone Inputs 6
Duress Code 12

E

Entry Delay 16
EOL Zones 20
Event Buffer Transmission 43
Event Call Direction 32
Exit Delay 24
Expansion Input 14

F

Feature Select Programming Method 8
Fire Circuits 7
Fire Zone, Delayed 17
Fire Zone, Standard 24 Hr. 17
Follow Zones 16
Force Arming 47
Force Zones 19

G

Global PGM 36
Ground 3

H

Hardware Reset 37

I

Input Speed 20
Installation 2

Installer Code 11
Installer Lock 37
Installer Quick Functions Keys 39
Installer Test Mode 39
Instant Arming 46
Intellizone 19

K

Key. See Memory Card
Keypad Audible Trouble Warning 39
Keypad Backlight 49
Keypad Installation 7
Keypad Muting 49
Keypad Panic Options 26
Keypad Tamper Supervision 38
Keypad Zone Connection 7
Keyswitch Arming 48
Keyswitch Connections 7
Keyswitch Options 19
Keyswitch Zone 17

L

Length of Access Codes 11
Location and Mounting 2
Lock Master Code 12
Lock-out 37

M

Manual Bypass Programming 47
Maximum Dialing Attempts 33
Memory Card 10
Memory Display 48
Monitoring Station Telephone Numbers 30
Mounting 2
Multiple Feature Select Programming Method 8
Muting 49

N

No Arming On Battery Fail 22
No Arming on Supervision Loss 41
No Arming On Tamper Trouble 22
No Audible Feedback Upon Stay Arming 24
No Exit Delay When Arming with Remote Control 24
No Movement Auto-Arming 23
Number of Rings 42

O

One-Touch Arming 24, 47
Options
- Alarm 25
- Arming and Disarming 22
- Auto-Arming 23
- Keyswitch 19
- User code 11
- Zone 18

Override Answering Machine 42

P

Pager Delay 32
Pager Format Transmission Options 32
Pager Reporting Format 32
Panel Answer Options 42
Panel Identifier 42
Panic Alarms 48
Panic Options 26
Partition Account Numbers 31
Partition Assignment, Zone 18
Partitioning 38
PC Password 43
PC Telephone Number 43
PGM (Control Panel)
- Activation Event 36
- Deactivation Event 36
- PGM Delay 36
- Strobe Options 37

PGM Activation, User Code Option 12
Power 4
Power Failure Report Delay 34
Programmable Output Connections 5
Programmable Outputs 35
Programming a Wireless Fire Zone 17
Programming Access Codes 45
Programming Chime Zones 48
Programming Methods 8
Programming Using a Keypad 8
Pulse Ratio 33

Q

Quick Arming 24
Quick Functions Keys (Installer) 39

R

Real-Time Clock 38
Reassign Keypad Zone 2 14
Reassign Zones to Expansion Inputs 14
Recall Bypass 47
Recent Close Delay 34
Recycle Alarm 25
Regular Arming 46
Regular Arming Switches to Force Arming 22
Report Codes 28
Reporting and Dialer settings 27
Reporting Formats 31
Re-Program All Expansion Modules 42
Reset, Hardware 37
Restrict Arming On Battery Fail 22
Restrict Arming on Supervision Loss 41
Restrict Arming On Tamper Trouble 22
Rings 42

S

Shutdown, Auto Zone 18
Single Zone Inputs 6
Software, Upload/download 8
Special Alarm Report Codes 29
Special Arming Report Codes 28
Special Disarming Report Codes 28
Special Reporting Codes 30
Standard 24Hr. Fire Zone 17
Stay Arming 46
Stay Delay 22
Stay Zones 18
Strobe Options 37
Supervision Bypass Options 41
Supervision Options, Wireless Transmitter 41
Switch to Stay Arming 22
System Master Code 11
System Real-Time Clock 38
System Settings 37
System Trouble Report Codes 29
System Trouble Restore Codes 30

T

Tamper Bypass Options 25
Tamper Recognition 25
Telephone Line Connection 4
Telephone Line Monitoring (TLM) 35
Telephone Number, PC 43
Telephone Numbers 30

Test Report, Automatic 34
Test Report, Manual 40
Timed Auto-Arming 23
Timer, Closing Delinquency 34
Transmit, Pager Format 32
Trouble Display 44

U

Upload/Download Software 8
User Code Options 11
User Operation 44

W

Winload Software 8
Wireless Bus Module Supervision 41
Wireless Fire Zone 17
Wireless Transmitter Low Battery Supervision 41
Wireless Transmitter Supervision Options 41
Wiring Options, ATZ 21

Z

Zone 1 Becomes 2-Wire Smoke Input 21
Zone Alarm Report Codes 29
Zone Alarm Restore Report Codes 29
Zone Doubling 20
Zone Options 18
Zone Partition Assignment 18
Zone Programming 13
Zone Restore Report Options 35
Zone Speed 20
Zone Tamper Report Codes 29
Zone Tamper Restore Report Codes 29

For technical support in Canada or the U.S., call 1-800-791-1919 for English or 1-866-912-0600 for French, Monday to Friday from 8:00 a.m. to 8:00 p.m. EST. For technical support outside Canada and the U.S., call 00-1-450-491-7444, Monday to Friday from 8:00 a.m. to 8:00 p.m. EST. Please feel free to visit our website at www.paradox.ca.

PARADOX®
SECURITY SYSTEMS
780 Industriel Blvd., Saint-Eustache (Quebec) J7R 5V3 CANADA
Tel.: (450) 491-7444 Fax: (450) 491-2313
www.paradox.ca
PRINTED IN CANADA 03/2005 17X8-EI14