SPECTRA™

PROGRAMMING GUIDE

SPECTRA CONTROL PANELS V1.2

1725, 1725EX, 1728 AND 1728EX

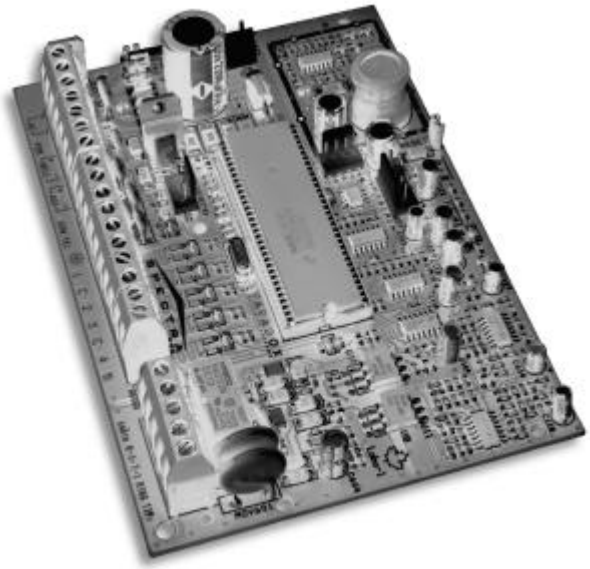

1755, 1755EX, 1758, AND 1758EX

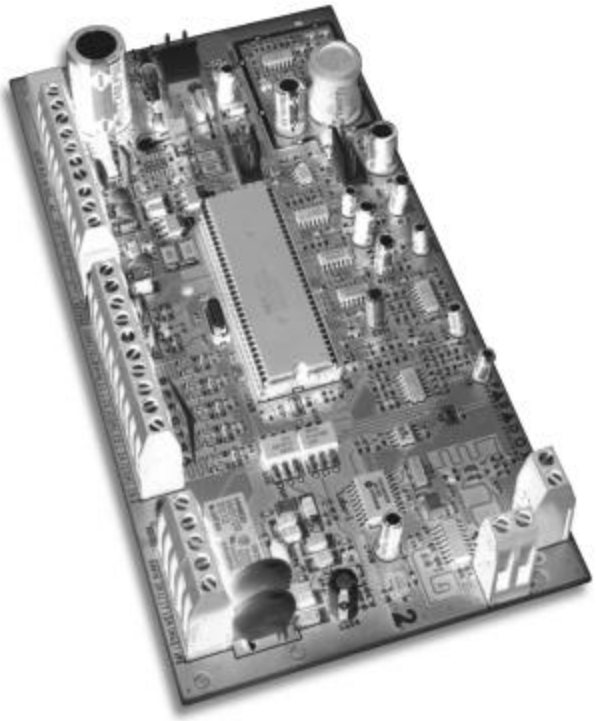

PARADOX®
SECURITY SYSTEMS

TABLE OF CONTENTS

HOW DO I PROGRAM THE SYSTEM? 4
Single Digit Data Entry Method (Hexadecimal and decimal) 4
Multiple Feature Select Programming Method 4
Data Display Mode (LED Keypads Only) 5
Paradox Memory Key 5

ZONE PROGRAMMING 6
What is an Expansion Input? 6
How Do I Program the Zones? 7

SYSTEM TIMERS 8

HOW DO I SET THE PROGRAMMABLE OUTPUTS? 9

SYSTEM OPTIONS 12
General Options 12
Arming/Disarming Options 12
Zone Options 13
Partition 1 Options 13
Partition 2 Options 14
Dialer Options 14
Event Call Direction 14

COMMUNICATION SETTINGS 15

REPORT CODES 16
Arming Report Codes 16
Disarming Report Codes 16
Alarm Report Codes 17
Tamper Report Codes 17
System Trouble Report Codes 17
Programmable - Ademco Contact ID Report Code List 18
All Codes - Ademco Contact ID Report Code List 19

SYSTEM SETTINGS 20

USER CODE OPTIONS 21

LIBERATOR WIRELESS BUS MODULE (SPC-319) 22
Wireless Transmitter Assignment (Liberator Only) 22
Wireless Module Options (Liberator Only) 22
PGM Programming (Liberator Only) 23
Serial Number Display 23
Signal Strength Display 24
Liberator Module (SPC-319) Reset 24

ZONE EXPANSION MODULES (SPC-ZX4/8) 25
PGM Timer (Zone Module SPC-ZX8 Only) 25
Options 25
Zone Assignment 25
PGM Programming (Zone Module SPC-ZX8 Only) 26
Reset Zone Expansion Module 26

REMOTE CONTROL PROGRAMMING 27
User Assignment 27

Button Programming 27
Remote Control Assignment (Liberator Only) 28
Remote Control Assignment (1755, 1755EX, 1758 and 1758EX Panels Only) 28
Reprogram ALL Modules 28
Paradox Memory Key 28

USER OPERATION 29
Trouble Display 29
Partitioning 30
Programming Access Codes 30
Disarming & Deactivating an Alarm 31
Regular Arming 31
Stay Arming 31
Instant Arming 32
Force Arming 32
Manual Bypass Programming 32
Bypass Recall Feature 33
One-Touch Arming 33
Keyswitch Arming 33
Panic Alarms 33
Auto-Arming 34
Alarm Memory Display 34
Programming Chime Zones 34
Keypad Muting 34
Quick Function Keys 34

HARDWARE CONNECTIONS 35
Single Zone Inputs 35
Double Zone Inputs (with ATZ option only) 35
Connecting a Keyswitch 36
Connecting Fire Circuits 36
PGM Connections 36
Connecting A Liberator Wireless Bus Module (SPC-319) 37
Connecting A Zone Expansion Module (SPC-ZX8) 37
Spectra 1725, 1725EX, 1728 and 1728EX PCB Layout 38
Spectra 1755, 1755EX, 1758 and 1758EX PCB Layout 39
Connecting Speakers to the Bell Output (Siren Driver Option Only) 39

HOW DO I PROGRAM THE SYSTEM?

The ***Spectra***™ series control panels can be programmed using the *WinLoad Software* or by using any keypad connected to the ***Spectra*** control panel. For information on the WinLoad Software, please refer to *the Spectra Installation & Reference Manual*. To program the ***Spectra*** control panel using a keypad, you must enter the *Programming Mode* as shown below. Once a control panel has been programmed, you can use the ***Paradox Memory Key*** to copy the contents from the programmed control panel to one or more control panels (see page 5).

Default Installer Code: 000000 *(see section [281] on page 20)*
Default System Master Code: 123456 *(see section [301] on page 21)*

To enter Programming Mode:

STEP 1: Press **[ENTER]**

STEP 2: Enter your **[INSTALLER CODE]**

STEP 3: Enter 3 digits of **[SECTION]** you wish to program

STEP 4: Enter required **[DATA]**

SINGLE DIGIT DATA ENTRY METHOD (Hexadecimal and Decimal)

Single Digit Data Entry is used in all sections except those specified in *Multiple Feature Select Programming Method*. After entering the programming mode as described in the shaded box above, some sections will require that you enter **Decimal** values from **000 to 255**. Other sections will require that you enter **Hexadecimal** values from **0 to F**. The required data will be clearly indicated in this manual. When entering the final digit in a section, the control panel will automatically save and advance to the next section. With the exception of sections 001 to 016, where after entering the first two digits, the control panel will switch to *Multiple Feature Select Programming*.

Table 1: Decimal and Hexadecimal Programming Table

Value or Action	What Do I Press?	What Do I See?		
		10-Zone LED	16-Zone LED	LCD
Values 1 to 9	[1] to [9]	[1] to [9]	[1] to [9]	[1] to [9]
A (hexa only)	[0]	[0 (10)]	[10]	A
B (hexa only)	[STAY]	[STAY]	[11]	B
C (hexa only)	[BYP]	[BYP]	[12]	C
D (hexa only)	[MEM]	[MEM]	[13]	D
E (hexa only)	[TBL] / [TRBL]	[TBL]	[14]	E
F (hexa only)	[PG] / [FNC1]	[PG]	[15]	F
Erase Current Digit	[FORCE]	Displays next digit or next section		
Exit Without Saving	[CLEAR]	[ENTER] flashes	[ARM1] & [STAY1] flash	"SECTION [ ]"
Save Data (hexa only)	[ENTER]	Advances to the next section		

MULTIPLE FEATURE SELECT PROGRAMMING METHOD

Sections: [001] to [016], [127] to [138], [302] to [348], [610], [650] to [651]
After entering the programming mode as described in the shaded box above, each option from **[1]** to **[8]** will represent a specific feature or option. Press the key corresponding to the desired option and the corresponding light will illuminate or the option number will appear in the LCD display. This means the option is on. Press the key again to extinguish the corresponding light or remove the digit from the LCD display, thereby, turning off the option. Please note that pressing the **[FORCE]** key will set all 8 options to "off". Press the keys as many times as you need until all 8 options in the current section are set. When the options are set, press the **[ENTER]** key to save and advance to the next section.

DATA DISPLAY MODE (LED Keypads Only)

In the *Data Display Mode* you can view the programmed contents of each section one digit at a time. After entering the desired 3-digit section (see step 3 of the "To Enter Programming Mode" box on the previous page), press the **[ENTER]** key to access the *Data Display Mode*. This mode will not function with sections using the *Multiple Feature Select Programming Method* (see previous page).

To access the *Data Display Mode,* press the **[ENTER]** key after entering a section and before entering any data. The three LEDs as indicated below will begin to flash indicating that you are in the *Data Display Mode.*

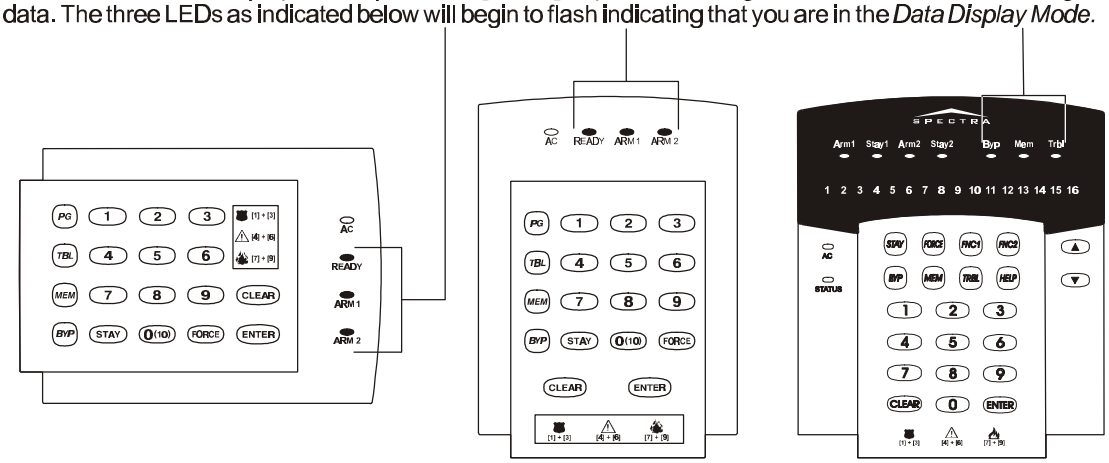

1686H **1686V** **1689**

Each time the **[ENTER]** key is pressed, the keypad will display the next digit in the current section and will continue through all the following sections one digit at a time without changing the programmed values. Not available for sections using the *Multiple Feature Select Method.* Press the **[CLEAR]** key at any time to exit the *Data Display Mode.*

PARADOX MEMORY KEY

Copy the programmed contents of one Spectra control panel into the *Paradox Memory Key*. Then copy the contents of the *Paradox Memory Key* into as many Spectra control panels as you need. Each control panel is programmed in less than 3 seconds.

If you use the Memory Key to download to a Spectra 1755, 1755EX, 1758, or 1758EX, you will have to reassign the remote controls (see page 28).

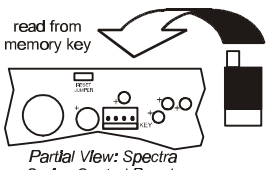

Partial View: Spectra Series Control Panels

Download to DESTINATION Control Panel

1)Remove AC and battery power from the control panel.
2)Insert the *Memory Key* onto the serial connector labeled "KEY" on the Spectra control panel to which you wish to download the contents of the memory key to.
3) Reapply AC and battery power.
4)Enter installer programming mode, enter section **[900]**, then press **[ENTER]** to acknowledge.
5)When the keypad emits a "confirmation beep", remove the *Memory Key*.

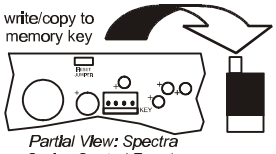

Partial View: Spectra Series Control Panels

Copy to Memory Key from SOURCE Control Panel

1)Remove AC and battery power from the control panel.
2)Insert *Memory Key* onto the serial connector labeled "KEY" on the Spectra control panel from which you wish to copy. Make sure the write protect jumper of the Memory Key is on.
3)Reapply AC and battery power.
4)Enter installer programming mode, enter section **[902]**, then press **[ENTER]** to acknowledge.
5)When the keypad emits a "confirmation beep", remove the *Memory Key*. Remove the *Memory Key*'s jumper if you do not wish to accidentally overwrite its contents.

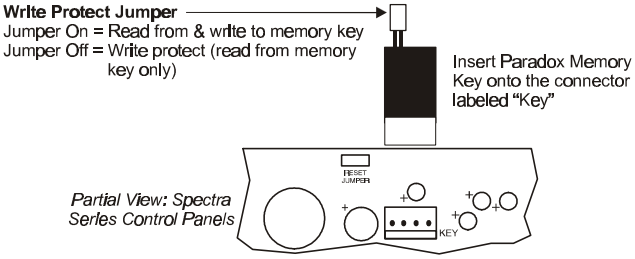

Partial View: Spectra Series Control Panels

ZONE PROGRAMMING

When programming zones please note that the Spectra control panels' zone assignment is dependent on where the detection devices in the system are connected (see Table 2 below).

Table 2: Zone Recognition Table

Device connected to which input?	1725EX 1755EX NO ATZ	1725 1755 WITH ATZ	1728EX 1758EX NO ATZ	1728 1758 WITH ATZ
Control Panel Input 1 =	Zone 1	Zone 1 & 4	Zone 1	Zone 1 & 6
Control Panel Input 2 =	Zone 2	Zone 2 & 5	Zone 2	Zone 2 & 7
Control Panel Input 3 =	Zone 3	Zone 3 & 6	Zone 3	Zone 3 & 8
Control Panel Input 4 =	N/A	N/A	Zone 4	Zone 4 & 9
Control Panel Input 5 =	N/A	N/A	Zone 5	Zone 5 & 10
Keypad Zone 1 =	Zone 4	Zone 7	Zone 6	Zone 11
Keypad Zone 2 =	Zone 5	Zone 8	Zone 7	Zone 12
Expansion Input 1 =	Zone 6	Zone 9	Zone 8	Zone 13
Expansion Input 2 =	Zone 7	Zone 10	Zone 9	Zone 14
Expansion Input 3 =	Zone 8	Zone 11	Zone 10	Zone 15
Expansion Input 4 =	Zone 9	Zone 12	Zone 11	Zone 16
Expansion Input 5 =	Zone 10	Zone 13	Zone 12	N/A
Expansion Input 6 =	Zone 11	Zone 14	Zone 13	N/A
Expansion Input 7 =	Zone 12	Zone 15	Zone 14	N/A
Expansion Input 8 =	Zone 13	Zone 16	Zone 15	N/A

WHAT IS AN EXPANSION INPUT?

There are a total of eight expansion inputs available. Each hardwired input on a Zone Expansion Module or wireless transmitter used by the Liberator™ Wireless Bus Module can be assigned to an expansion input. The expansion inputs can be used in any combination. For example, you can assign four wireless transmitters as well as 4 hardwire inputs to the expansion inputs. Regardless of how many expansion modules are being used, **the control panel cannot support more than eight expansion inputs**. The expansion module inputs are assigned as follows:

SPC-319 Liberator Wireless Bus Module
Wireless transmitters assigned to sections **[601]** to **[608]** of the control panel represent expansion inputs 1 to 8 respectively. Refer to *Wireless Transmitter Assignment* on page 22.

SPC-ZX4 and SPC-ZX8 Zone Expansion Module
Detection devices connected to input terminals Z1 to Z4 of the SPC-ZX4 module or Z1 to Z8 of the SPC-ZX8 module, represent expansion inputs 1 to 8 respectively. Please note that the module's inputs must be enabled in section **[651]** of the control panel. Refer to *Zone Assignment* on page 25.

Do not assign devices from different modules to the same expansion input. For example, do not assign a wireless transmitter to section [601], then connect a detection device to input Z1 of the SPC-ZX8 and enable option [1] in section [651].

HOW DO I PROGRAM THE ZONES?

STEP 1: Press the **[ENTER]** key

STEP 2: Enter the **[INSTALLER CODE]** (Default: 000000)

STEP 3: Enter 3-digit **[SECTION]**

STEP 4: Enter one digit from the **Zone Definition** table

STEP 5: Enter one digit from the **Partition Assignment** table

STEP 6: Select one or more options from the **Zone Options** table

STEP 7: Press the **[ENTER]** key

ZONE DEFINITION

Empty - Zone Disabled
1 - Entry Delay 1
2 - Entry Delay 2
3 - Follow
4 - Instant
5 - 24Hr. Burglary
Keyswitch Input *if zone 2*
24Hr. Fire *if zone 3*
6 - 24Hr. Buzzer
Delayed Fire *if zone 3*

PARTITION ASSIGNMENT

Empty - Zone Disabled
1 - Partition 1
2 - Partition 2
3 - Both Partitions

ZONE OPTIONS

1 - Auto Zone Shutdown
2 - Bypassable Zone
3 - Stay Zone

4 -	**5 -**	Zone Alarm Type
off	off	Audible alarm (steady)
off	on	Audible alarm (pulsed)
on	off	Silent alarm
on	on	Generates a report only

6 - Intellizone
7 - Delay alarm transmission
8 - Force Zone

KEYSWITCH OPTIONS

Only if zone 2 = keyswitch zone
1 - off = Maintained
on = Momentary
2 - off = Regular Arm
on = Stay Arm

[FORCE] key = empty

Section #	Description	Zone Definition *First Digit*	Partition Assignment *Second Digit*	Zone Options *Feature Select*
[001] = Zone 1:	_____	____	____	1 2 3 4 5 6 7 8
[002] = Zone 2:	_____	____	____	1 2 3 4 5 6 7 8
[003] = Zone 3:	_____	____	____	1 2 3 4 5 6 7 8
[004] = Zone 4:	_____	____	____	1 2 3 4 5 6 7 8
[005] = Zone 5:	_____	____	____	1 2 3 4 5 6 7 8
[006] = Zone 6:	_____	____	____	1 2 3 4 5 6 7 8
[007] = Zone 7:	_____	____	____	1 2 3 4 5 6 7 8
[008] = Zone 8:	_____	____	____	1 2 3 4 5 6 7 8
[009] = Zone 9:	_____	____	____	1 2 3 4 5 6 7 8
[010] = Zone 10:	_____	____	____	1 2 3 4 5 6 7 8
[011] = Zone 11:	_____	____	____	1 2 3 4 5 6 7 8
[012] = Zone 12:	_____	____	____	1 2 3 4 5 6 7 8
[013] = Zone 13:	_____	____	____	1 2 3 4 5 6 7 8
[014] = Zone 14:	_____	____	____	1 2 3 4 5 6 7 8
[015] = Zone 15:	_____	____	____	1 2 3 4 5 6 7 8
[016] = Zone 16:	_____	____	____	1 2 3 4 5 6 7 8
		Default = Empty	**Default = 1**	**Default = 1 & 2 on**

SYSTEM TIMERS

Section #	Decimal Value (000-255)	Description	Default Value
[050]	___/___/___ x10 msec.	ZONE SPEED (ZONE 1)	*600 msec.*
[051]	___/___/___ x10 msec.	ZONE SPEED (ZONE 2)	*600 msec.*
[052]	___/___/___ x10 msec.	ZONE SPEED (ZONE 3)	*600 msec.*
[053]	___/___/___ x10 msec.	ZONE SPEED (ZONE 4)	*600 msec.*
[054]	___/___/___ x10 msec.	ZONE SPEED (ZONE 5)	*600 msec.*
[055]	___/___/___ X10 msec.	ZONE SPEED (ZONE 6)	*600 msec.*
[056]	___/___/___ X10 msec.	ZONE SPEED (ZONE 7)	*600 msec.*
[057]	___/___/___ X10 msec.	ZONE SPEED (ZONE 8)	*600 msec.*
[058]	___/___/___ X10 msec.	ZONE SPEED (ZONE 9)	*600 msec.*
[059]	___/___/___ x10 msec.	ZONE SPEED (ZONE 10)	*600 msec.*
[060]	___/___/___ x10 msec.	ZONE SPEED (ZONE 11)	*600 msec.*
[061]	___/___/___ x10 msec.	ZONE SPEED (ZONE 12)	*600 msec.*
[062]	___/___/___ x10 msec.	ZONE SPEED (ZONE 13)	*600 msec.*
[063]	___/___/___ x10 msec.	ZONE SPEED (ZONE 14)	*600 msec.*
[064]	___/___/___ x10 msec.	ZONE SPEED (ZONE 15)	*600 msec.*
[065]	___/___/___ x10 msec.	ZONE SPEED (ZONE 16)	*600 msec.*

NOTE: If ATZ is enabled (section [132], key [5]), do not set the Zone Speed to less than 50msec. as this may cause false alarms.

[066]	___/___/___ seconds (000 = follow stop event)	PGM1 TIMER	5 sec.
[067]	___/___/___ seconds (000 = follow stop event)	PGM2 TIMER (1755/EX & 1758/EX ONLY)	*5 sec.*
[068]	___/___/___ seconds (000 = follow stop event)	GLOBAL PGM TIMER (SEE PAGE 23 & 26)	*5 sec.*
[069]	___/___/___ seconds	ENTRY DELAY 1	*45 sec.*
[070]	___/___/___ seconds	ENTRY DELAY 2	45 sec.
[071]	___/___/___ seconds	EXIT DELAY 1	*30 sec.*
[072]	___/___/___ seconds	EXIT DELAY 2	*30 sec.*
[073]	___/___/___ minutes (000 = no bell on alarm)	BELL CUT-OFF TIME - PARTITION 1	*4 min.*
[074]	___/___/___ minutes (000 = no bell on alarm)	BELL CUT-OFF TIME - PARTITION 2	*4 min.*
[075]	___/___/___ x15 minutes (000 = disabled)	NO MOVEMENT TIME - PARTITION 1	*Disabled*
[076]	___/___/___ x15 minutes (000 = disabled)	NO MOVEMENT TIME - PARTITION 2	*Disabled*
[077]	___/___/___ seconds (min.= 10 sec.)	ANS. MACHINE OVERRIDE DELAY	*Disabled*
[078]	___/___/___ (000 = no answer; max. = 15 rings)	NUMBER OF RINGS	*8 rings*
[079]	___/___/___ x2 sec. (min.= 32 sec.)	TLM FAIL TIMER	*32 sec.*
[080]	___/___/___ seconds	DELAY ALARM TRANSMISSION	*Disabled*
[081]	___/___/___ (000 = 16; max. 16)	MAXIMUM DIALING ATTEMPTS	*8 attempts*
[082]	___/___/___ seconds	DELAY BETWEEN ATTEMPTS	*20 sec.*
[083]	___/___/___ seconds	PAGER DELAY	*5 sec.*
[084]	___/___/___ seconds (min. 10 sec.)	INTELLIZONE DELAY	*48 sec.*
[085]	___/___/___ seconds	RECENT CLOSING DELAY	*No delay*
[086]	___/___/___ minutes	POWER FAILURE REPORT DELAY	*15 min.*
[087]	___/___/___ days (000 = disabled)	AUTO TEST REPORT	*Disabled*
[088]	___/___/___ (001-127 = +1 to +127 sec.) (128-255 = -1 to -127 sec.)	CLOCK ADJUST	*Disabled*
[089]	___/___/___ (000 = Disabled; max. = 15)	AUTO ZONE SHUTDOWN COUNTER	*5*
[090]	___/___/___ minutes (000 = disabled)	RECYCLE ALARM DELAY	*Disabled*
[091]	___/___/___ (000 = disabled)	RECYCLE ALARM COUNTER	*Disabled*
[110]	___/___:___/___Hrs (00-23) & Min. (00-59)	AUTO TEST REPORT (TIME OF DAY)	*Disabled*
[111]	___/___:___/___Hrs (00-23) & Min. (00-59)	AUTO-ARM TIME - PARTITION 1	*Disabled*
[112]	___/___:___/___Hrs (00-23) & Min. (00-59)	AUTO-ARM TIME - PARTITION 2	*Disabled*

HOW DO I SET THE PROGRAMMABLE OUTPUTS?

Example: section [120] = 05 03 02: this means PGM1 will activate whenever partition 2 is Stay Armed.

Section #	Event Group #	Sub-Group #	Partition #
[120] = PGM1 Start Event	___/___	___/___	___/___
[121] = PGM1 Stop Event *Can be used as another Start Event if section [066] is programmed with a value other than 000.*	___/___	___/___	___/___
[122] = PGM2 Start Event	___/___	___/___	___/___
[123] = PGM2 Stop Event *Can be used as another Start Event if section [067] is programmed with a value other than 000.*	___/___	___/___	___/___
[124] = Global PGM Start Event	___/___	___/___	___/___
[125] = Global PGM Stop Event *Used to activate PGMs on expansion modules and LCD keypads (see page 22 and page 25)*	___/___	___/___	___/___

01 = Partition 1
02 = Partition 2
99 = Any Partition

*Sub-Groups proceeded by **(Partition 1 only)** cannot be assigned to activate in partition 2.*

Event Group #	Sub-Group #
00 = Zone OK	01-16 = Zones 1 to 16 99 = Any Zone
01 = Zone Open	01-16 = Zones 1 to 16 99 = Any Zone
02 = Partition Status	00 = System not ready (*Partition 1 only*) 01 = System ready (*Partition 1 only*) 02 = Steady Alarm in Partition 03 = Pulsed Alarm in Partition 04 = Pulsed or Steady Alarm in Partition 05 = Alarm in Partition Restored 06 = Bell Squawk Activated (*Partition 1 only*) 07 = Bell Squawk Deactivated (*Partition 1 only*) 99 = Any Sub-Group
03 = Global Disarm with User Code	01-48 = User Code Numbers 001 to 048 99 = Any User Code
04 = Special Global Disarm	00 = Disarm with WinLoad Software 01 = Disarm with Keyswitch 99 = Any Sub-Group
05 = Non-Reportable Events	00 = Telephone Line Trouble (*Partition 1 only*) 01 = [PG] or [FNC1] key was pressed (*Partition 1 only*) 02 = Instant Arming 03 = Stay Arming 04 = Force Arming 05 = Fast Exit (Force & Regular Only) 06 = PC Fail to Communicate (*Partition 1 only*) 07 = Midnight (*Partition 1 only*) 08 = Ground start (*Partition 1 only*) 99 = Any Sub-Group (*Partition 1 only, except 02 to 05*)

Event Group #	Sub-Group #
06 = Arm/Disarm with Remote Control	01-08 = Remote Controls 1 to 8 99 = Any Remote Control
07 = Button Pressed on Remote *(see button option "B" on page 27)*	01-08 = Remote Controls 1 to 8 99 = Any Remote Control
08 = Button Pressed on Remote *(see button option "C" on page 27)*	01-08 = Remote Controls 1 to 8 99 = Any Remote Control
09 = Button Pressed on Remote *(see button option "D" on page 27)*	01-08 = Remote Controls 1 to 8 99 = Any Remote Control
10 = Bypass Programming	01-48 = User Code Numbers 001 to 048 99 = Any User Code
11 = User Activated PGM	01-48 = User Code Numbers 001 to 048 99 = Any User Code
12 = Zone with Delay Transmission Option Enabled is Breached	01-16 = Zones 1 to 16 99 = Any Zone
13 = Arm with User Code	01-48 = User Code Numbers 001 to 048 99 = Any User Code
14 = Special Arm	00 = Auto Arming (timed/no movement) 01 = Late to Close (auto arming failed) 02 = No Movement Auto Arming 03 = Partial Arming (stay, force, instant, bypass) 04 = One-Touch Arming 05 = Arm with WinLoad Software 06 = Arm with Keyswitch 99 = Any Sub-Group
15 = Disarm with User Code	01-48 = User Code Numbers 001 to 048 99 = Any User Code
16 = Disarm After Alarm w/ User Code	01-48 = User Code Numbers 001 to 048 99 = Any User Code
17 = Cancel Alarm with User Code	01-48 = User Code Numbers 001 to 048 99 = Any User Code
18 = Special Disarm	00 = Cancel Auto Arm (timed/no movement) 01 = Disarm with WinLoad Software 02 = Disarm with Keyswitch 03 = Reserved for Future Use 04 = Disarm after alarm with WinLoad Software 05 = Disarm after alarm with Keyswitch 06 = Cancel Alarm with WinLoad Software 07 = Cancel Alarm with Keyswitch 99 = Any Sub-Group
19 = Zone Bypassed on Arming	01-16 = Zones 1 to 16 99 = Any Zone
20 = Zone in Alarm	01-16 = Zones 1 to 16 99 = Any Zone
21 = Fire Alarm	03 = Zone 3 99 = Any Zone
22 = Zone Alarm Restore	01-16 = Zones 1 to 16 99 = Any Zone
23 = Fire Alarm Restore	03 = Zone 3 99 = Any Zone

Event Group #	Sub-Group #
24 = Special Alarm	00 = Emergency Panic 01 = Auxiliary Panic 02 = Fire Panic 03 = Recent Closing 04 = Auto Zone Shutdown 05 = Duress Alarm 99 = Any Sub-Group
25 = Auto Zone Shutdown	01-16 = Zones 1 to 16 99 = Any Zone
26 = Zone Tamper	01-16 = Zones 1 to 16 99 = Any Zone
27 = Zone Tamper Restore	01-16 = Zones 1 to 16 99 = Any Zone
28 = System Trouble	01 = AC Loss: only after *Power Failure Delay* has elapsed (*Partition 1 only*) 02 = Battery Failure (*Partition 1 only*) 03 = Auxiliary current overload (*Partition 1 only*) 04 = Bell current overload (*Partition 1 only*) 05 = Bell disconnected (*Partition 1 only*) 06 = Timer Loss (*Partition 1 only*) 07 = Fire Loop Trouble (*Partition 1 only*) 08 = Wireless Transmitter Low Battery (*Partition 1 only*) 09 = Module Fault (*Partition 1 only*) 10 = Printer Fault (*Partition 1 only*) 11 = Fail to Communicate (*Partition 1 only*) 99 = Any Sub-Group (*Partition 1 only*)
29 = System Trouble Restore	00 = TLM restore (*Partition 1 only*) 01 = AC Loss restore (*Partition 1 only*) 02 = Battery Failure restore (*Partition 1 only*) 03 = Auxiliary current overload restore (*Partition 1 only*) 04 = Bell current overload restore (*Partition 1 only*) 05 = Bell disconnected restore (*Partition 1 only*) 06 = Timer Programmed (*Partition 1 only*) 07 = Fire Loop Trouble restore (*Partition 1 only*) 08 = Wireless Transmitter Low Battery restore (*Partition 1 only*) 09 = Module Fault restore (*Partition 1 only*) 10 = Printer Fault restore (*Partition 1 only*) 11 = Fail to Communicate restore (*Partition 1 only*) 99 = Any Trouble Restore (*Partition 1 only*)
30 = Special Reporting	00 = System Power Up (*Partition 1 only*) 01 = Test Report (*Partition 1 only*) 02 = WinLoad Software Access (*Partition 1 only*) 03 = WinLoad Software Access finish (*Partition 1 only*) 04 = Installer enters programming mode (*Partition 1 only*) 05 = Installer exits programming mode (*Partition 1 only*) 99 = Any Sub-Group (*Partition 1 only*)
31 = Wireless Transmitter Supervision Loss	01-16 = Zones 1 to 16 99 = Any Zone
32 = Wireless Transmitter Supervision Loss Restore	01-16 = Zones 1 to 16 99 = Any Zone

SYSTEM OPTIONS

Bold = Default Setting

SECTION [127]: General Options

Option		OFF	ON
[1]	*Partitioning*	☐ **Disabled**	☐ Enabled
[2]	*Access Code Length*	☐ 6-digits	☐ **4-digits**
[3]	*Keypad Audible Trouble Warning*	☐ Disabled	☐ **Enabled**
[4]	*Lock System Master Code*	☐ **Disabled**	☐ Enabled
[5]	*Battery Charge Current*	☐ **350mA**	☐ 700mA
[6]	*User Code 048 is a Duress Code*	☐ **Disabled**	☐ Enabled
[7]	*Alarm Relay follows (1755/EX & 1758/EX only)*	☐ **Bell Output**	☐ Global PGM
[8]	*Normal State of PGM1*	☐ **Normally Closed (N.C.)**	☐ Normally Open

SECTION [128]: General Options

Option		OFF	ON
[1]	*Panic 1: Keys [1] & [3]*	☐ **Disabled**	☐ Enabled
[2]	*Panic 2: Keys [4] & [6]*	☐ **Disabled**	☐ Enabled
[3]	*Panic 3: Keys [7] & [9]*	☐ **Disabled**	☐ Enabled
[4]	*Panic 1: Silent or Audible*	☐ **Silent**	☐ Audible
[5]	*Panic 2: Silent or Audible*	☐ **Silent**	☐ Audible
[6]	*Panic 3: Silent or Fire*	☐ **Silent**	☐ Fire
[7]	*Keypad 1 Tamper Supervision*	☐ **Disabled**	☐ Enabled
[8]	*Keypad 2 Tamper Supervision*	☐ **Disabled**	☐ Enabled

SECTION [129]: General Options

Option		OFF	ON
[1]	*PGM2 Output Activation Option**	☐ **Steady**	☐ Pulse (flash)
[2]	*PGM2 Pulse Once Every 30sec. If System Armed**	☐ **Disabled**	☐ Enabled
[3]	*PGM2 Pulse On Arm, Twice On Disarm**	☐ **Disabled**	☐ Enabled
[4]	*SPC-ZX4/8 Zone Expansion Module Supervision*	☐ **Disabled**	☐ Enabled
[5]	*SPC-319 Wireless Module Supervision*	☐ **Disabled**	☐ Enabled
[6]	*SPC-319 Wireless Module Low Battery Super.*	☐ **Disabled**	☐ Enabled
[7]	*Siren Driver* on Bell Output*	☐ **Disabled**	☐ Enabled
[8]	*Normal State of PGM2*	☐ **Normally Closed (N.C.)**	☐ Normally Open

**1755, 1755EX, 1758 and 1758EX only*

SECTION [130]: Arming/Disarming Options

Option		OFF	ON
[1]	*One-Touch Regular Arming*	☐ **Disabled**	☐ Enabled
[2]	*One-Touch Stay Arming*	☐ **Disabled**	☐ Enabled
[3]	*One-Touch Force Arming*	☐ **Disabled**	☐ Enabled
[4]	*One-Touch Bypass Programming*	☐ **Disabled**	☐ Enabled
[5]	*Restrict Arming on Battery Failure*	☐ **Disabled**	☐ Enabled
[6]	*Restrict Arming on Tamper Trouble*	☐ **Disabled**	☐ Enabled
[7]	*Bell Squawk on Arm/Disarm with Keypad*	☐ **Disabled**	☐ Enabled
[8]	*Beep on Exit Delay*	☐ Disabled	☐ **Enabled**

SECTION [131]: Arming/Disarming Options

Option		OFF	ON
[1]	*Report Disarming*	☐ Always	☐ **Only after alarm**
[2]	*Regular Arming Switches to Force Arming*	☐ **Disabled**	☐ Enabled
[3]	*Bell Squawk on Arm/Disarm with Remote Control* (must be enabled for UL installations)	☐ **Disabled**	☐ Enabled
[4]	*No Exit Delay When Arming with a Remote Control*	☐ **Disabled**	☐ Enabled
[5]	*No Exit Delay Beeps and No Bell Squawk When Stay Arming*	☐ **Disabled**	☐ Enabled
[6]	*Restrict Arming On Wireless Transmitter Supervision Loss*	☐ **Disabled**	☐ Enabled
[7]	*Generate Supervision Loss if Detected on Bypassed Wireless Zone*	☐ **Yes**	☐ No
[8]	*Normal State of Global PGM*	☐ **Normally Closed (N.C.)**	☐ Normally Open

SECTION [132]: Zone Options

Option		OFF	ON
[1]&[2]	Tamper Recognition Options	☐ see table ☐ see table	☐ see table ☐ see table
[3]	*Generate Tamper if detected on Bypassed Zone*	☐ **Yes**	☐ No
[4]	*EOL (end-of-line) Resistors*	☐ **No EOL**	☐ Use EOL Resistors
[5]	*ATZ Zone Doubling (optional)*	☐ **Disabled**	☐ Enabled
[6]	*Report Zone Restore*	☐ **On Bell Cut-off**	☐ On Zone Closure
[7]&[8]	Wireless Transmitter Supervision Options	☐ see table ☐ see table	☐ see table ☐ see table

Tamper Recognition Options

[1]	[2]	
OFF	**OFF**	**—Disabled (Default)**
OFF	ON	—When disarmed: GENERATES TROUBLE ONLY When armed: Follows *Zone Alarm Types* (page 7)
ON	OFF	—When disarmed: GENERATES SILENT ALARM When armed: Follows *Zone Alarm Types* (page 7)
ON	ON	—When disarmed: GENERATES AUDIBLE ALARM When armed: Follows *Zone Alarm Types* (page 7)

Wireless Transmitter Supervision Options

[7]	[8]	
OFF	**OFF**	**—Disabled (Default)**
OFF	ON	—When disarmed: GENERATES TROUBLE ONLY When armed: Follows *Zone Alarm Types* (page 7)
ON	OFF	—When disarmed: GENERATES SILENT ALARM When armed: Follows *Zone Alarm Types* (page 7)
ON	ON	—When disarmed: GENERATES AUDIBLE ALARM When armed: Follows *Zone Alarm Types* (page 7)

SECTION [133]: Partition 1 Options

Option		OFF	ON
[1]	*Auto-Arm on Time*	☐ **Disabled**	☐ Enabled
[2]	*Auto-Arm on No Movement*	☐ **Disabled**	☐ Enabled
[3]	*Auto Arming = Regular or Stay*	☐ **Regular Arming**	☐ Stay Arming
[4]	*Future Use*	☐ **N/A**	☐ N/A
[5]	*Future Use*	☐ **N/A**	☐ N/A
[6]	*Future Use*	☐ **N/A**	☐ N/A
[7]	*Switch to Stay Arming if no entry delay is opened*	☐ **Disabled**	☐ Enabled
[8]	*Future Use*	☐ **N/A**	☐ N/A

SECTION [134]: Partition 2 Options

Option		OFF	ON
[1]	*Auto-Arm on Time*	☐ **Disabled**	☐ Enabled
[2]	*Auto-Arm on No Movement*	☐ **Disabled**	☐ Enabled
[3]	*Auto Arming = Regular or Stay*	☐ **Regular Arming**	☐ Stay Arming
[4]	*Future Use*	☐ **N/A**	☐ N/A
[5]	*Future Use*	☐ **N/A**	☐ N/A
[6]	*Future Use*	☐ **N/A**	☐ N/A
[7]	*Switch to Stay Arming if no entry delay is opened*	☐ **Disabled**	☐ Enabled
[8]	*Future Use*	☐ **N/A**	☐ N/A

SECTION [135]: Dialer Options

Option		OFF	ON
[1]	Telephone Line Monitoring (TLM) Options	☐ see table	☐ see table
[2]		☐ see table	☐ see table
[3]	*Reporting*	☐ **Disabled**	☐ Enabled
[4]	*Dialing Method*	☐ Pulse Dialing	☐ **Tone (DTMF) Dialing**
[5]	*Pulse Ratio*	☐ 1:2 (Europe)	☐ **1:1.5 (North America)**
[6]	*If armed, activate bell output on Com. Failure*	☐ **Disabled**	☐ Enabled
[7]	*Future Use*	☐ **N/A**	☐ N/A
[8]	*Future Use*	☐ **N/A**	☐ N/A

[1]	[2]	
OFF	**OFF**	— **TLM disabled (Default)**
OFF	ON	— TLM generates a trouble if armed
ON	OFF	— TLM generates an audible alarm if armed
ON	ON	— Silent alarms become audible

SECTION [136]: Dialer Options

Option		OFF	ON
[1]	*Call Back*	☐ **Disabled**	☐ Enabled
[2]	*Automatic Event Buffer Transmission*	☐ **Disabled**	☐ Enabled
[3]	*Contact I.D. Report Codes*	☐ Programmable	☐ **All Codes (automatic)**
[4]	*Alternate Dial*	☐ **Disabled**	☐ Enabled
[5]	*If no dial tone is present*	☐ **Continue after 4 sec.**	☐ Hang-up after 16 sec.
[6]	*Future Use*	☐ **N/A**	☐ N/A
[7]	*Future Use*	☐ **N/A**	☐ N/A
[8]	*Future Use*	☐ **N/A**	☐ N/A

SECTION [137]: Event Call Direction

Option		OFF	ON
[1]	*Call Telephone #1 for Arming/Disarming Report Codes*	☐ Disabled	☐ **Enabled**
[2]	*Call Telephone #2 for Arming/Disarming Report Codes*	☐ **Disabled**	☐ Enabled
[3]	*Call Telephone #1 for Alarm/Restore Report Codes*	☐ Disabled	☐ **Enabled**
[4]	*Call Telephone #2 for Alarm/Restore Report Codes*	☐ **Disabled**	☐ Enabled
[5]	*Call Telephone #1 for Tamper/Restore Report Codes*	☐ Disabled	☐ **Enabled**
[6]	*Call Telephone #2 for Tamper/Restore Report Codes*	☐ **Disabled**	☐ Enabled
[7]	*Future Use*	☐ **N/A**	☐ N/A
[8]	*Future Use*	☐ **N/A**	☐ N/A

SECTION [138]: Event Call Direction

Option		OFF	ON
[1]	*Call Telephone #1 for Trouble/Restore Report Codes*	☐ Disabled	☐ **Enabled**
[2]	*Call Telephone #2 for Trouble/Restore Report Codes*	☐ **Disabled**	☐ Enabled
[3]	*Call Telephone #1 for Special Report Codes*	☐ Disabled	☐ **Enabled**
[4]	*Call Telephone #2 for Special Report Codes*	☐ **Disabled**	☐ Enabled
[5]	*Future Use*	☐ **N/A**	☐ N/A
[6]	*Future Use*	☐ **N/A**	☐ N/A
[7]	*Future Use*	☐ **N/A**	☐ N/A
[8]	*Future Use*	☐ **N/A**	☐ N/A

COMMUNICATION SETTINGS

Section #

[140] ___/___
TEL1 TEL2

REPORTING FORMATS
1 = *ADEMCO SLOW (1400Hz, 1900Hz, 10BPS)*
2 = *SILENT KNIGHT FAST (1400Hz, 1900Hz, 20BPS)*
3 = *SESCOA (2300Hz, 1800Hz, 20BPS)*
4 = *ADEMCO EXPRESS (DTMF 4+2)*
***5* = ADEMCO CONTACT ID (DEFAULT)** *ALSO, SEE OPTION [3] IN SECTION [136]*
6 = *PAGER FORMAT*

[141] ___/___/___/___ PANEL IDENTIFIER (WINLOAD SOFTWARE)
[142] ___/___/___/___ PC PASSWORD (WINLOAD SOFTWARE)

IMPORTANT NOTE: To enter account numbers with less than four digits, use the **[FORCE]** key to enter blank digits.

[143] ___/___/___/___ PARTITION ACCOUNT NUMBER 1
[144] ___/___/___/___ PARTITION ACCOUNT NUMBER 2

[150] __/__
PC TELEPHONE NUMBER FOR WINLOAD SOFTWARE (32-DIGITS, *if less than 32 press **[ENTER]** to accept*)

[151] __/__
CENTRAL STATION TELEPHONE OR PAGER NUMBER 1 (32-DIGITS, *if less than 32 press **[ENTER]** to accept*)

[152] __/__
CENTRAL STATION TELEPHONE OR PAGER NUMBER 2 (32-DIGITS, *if less than 32 press **[ENTER]** to accept*)

[153] __/__
BACK UP TELEPHONE NUMBER (32-DIGITS, *if less than 32 press **[ENTER]** to accept*)

Special Keys for Telephone Numbers

[STAY] = * **[MEM]** = Switch from pulse to tone dialing or vice versa **[FORCE]** = Delete current digit
[BYP] = # **[TBL]** or **[TRBL]** = 4-second pause **[PG]** or **[FNC1]** = Inserts Blank Space

REPORT CODES

Each section contains report codes for up to 4 events:
Ademco Slow, Silent Knight, SESCOA, Ademco Express and **Pager Formats**: Enter desired 1 or 2-digit hexa-value (0-F)
Ademco "All Codes" Format: The control panel automatically generates report codes from the *"All Codes - Ademco Report Code List"* on page 19.
Ademco "Programmable" Format: Enter desired 2-digit hexa values from the *"Programmable - Ademco Report Code List"* on page 18. Also Note that entering FF will set the report code to the default Ademco Report Code.

ARMING REPORT CODES

[160]: __ /__ Access code 1
__ /__ Access code 2
__ /__ Access code 3
__ /__ Access code 4

[161]: __ /__ Access code 5
__ /__ Access code 6
__ /__ Access code 7
__ /__ Access code 8

[162]: __ /__ Access code 9
__ /__ Access code 10
__ /__ Access code 11
__ /__ Access code 12

[163]: __ /__ Access code 13
__ /__ Access code 14
__ /__ Access code 15
__ /__ Access code 16

[164]: __ /__ Access code 17
__ /__ Access code 18
__ /__ Access code 19
__ /__ Access code 20

[165]: __ /__ Access code 21
__ /__ Access code 22
__ /__ Access code 23
__ /__ Access code 24

[166]: __ /__ Access code 25
__ /__ Access code 26
__ /__ Access code 27
__ /__ Access code 28

[167]: __ /__ Access code 29
__ /__ Access code 30
__ /__ Access code 31
__ /__ Access code 32

[168]: __ /__ Access code 33
__ /__ Access code 34
__ /__ Access code 35
__ /__ Access code 36

[169]: __ /__ Access code 37
__ /__ Access code 38
__ /__ Access code 39
__ /__ Access code 40

[170]: __ /__ Access code 41
__ /__ Access code 42
__ /__ Access code 43
__ /__ Access code 44

[171]: __ /__ Access code 45
__ /__ Access code 46
__ /__ Access code 47
__ /__ Access code 48

SPECIAL ARMING CODES

[172]: __ /__ Auto-Arming
__ /__ Late to close
__ /__ No Movement
__ /__ Partial Arming

[173]: __ /__ Quick Arming
__ /__ Arming via PC
__ /__ Keyswitch Arming
__ /__ N/A

DISARMING REPORT CODES

[174]: __ /__ Access code 1
__ /__ Access code 2
__ /__ Access code 3
__ /__ Access code 4

[175]: __ /__ Access code 5
__ /__ Access code 6
__ /__ Access code 7
__ /__ Access code 8

[176]: __ /__ Access code 9
__ /__ Access code 10
__ /__ Access code 11
__ /__ Access code 12

[177]: __ /__ Access code 13
__ /__ Access code 14
__ /__ Access code 15
__ /__ Access code 16

[178]: __ /__ Access code 17
__ /__ Access code 18
__ /__ Access code 19
/ Access code 20

[179]: __ /__ Access code 21
__ /__ Access code 22
__ /__ Access code 23
__ /__ Access code 24

[180]: __ /__ Access code 25
__ /__ Access code 26
__ /__ Access code 27
__ /__ Access code 28

[181]: __ /__ Access code 29
__ /__ Access code 30
__ /__ Access code 31
__ /__ Access code 32

[182]: __ /__ Access code 33
__ /__ Access code 34
__ /__ Access code 35
__ /__ Access code 36

[183]: __ /__ Access code 37
__ /__ Access code 38
__ /__ Access code 39
/ Access code 40

[184]: __ /__ Access code 41
__ /__ Access code 42
__ /__ Access code 43
__ /__ Access code 44

[185]: __ /__ Access code 45
__ /__ Access code 46
__ /__ Access code 47
__ /__ Access code 48

SPECIAL DISARMING CODES

[186]: __ /__ Cancel Auto-Arm
__ /__ Disarming via PC
__ /__ Keyswitch Disarm
__ /__ N/A

ALARM REPORT CODES

ALARM

[187]: __ /__ Zone 1
__ /__ Zone 2
__ /__ Zone 3
__ /__ Zone 4

[188]: __ /__ Zone 5
__ /__ Zone 6
__ /__ Zone 7
__ /__ Zone 8

[189]: __ /__ Zone 9
__ /__ Zone 10
__ /__ Zone 11
__ /__ Zone 12

[190]: __ /__ Zone 13
__ /__ Zone 14
__ /__ Zone 15
__ /__ Zone 16

RESTORE

[191]: __ /__ Zone 1
__ /__ Zone 2
__ /__ Zone 3
__ /__ Zone 4

[192]: __ /__ Zone 5
__ /__ Zone 6
__ /__ Zone 7
__ /__ Zone 8

[193]: __ /__ Zone 9
__ /__ Zone 10
__ /__ Zone 11
__ /__ Zone 12

[194]: __ /__ Zone 13
__ /__ Zone 14
__ /__ Zone 15
__ /__ Zone 16

SPECIAL

[195]: __ /__ Emergency Panic
__ /__ Auxiliary Panic
__ /__ Fire Panic
__ /__ Recent Closing

[196]: __ /__ Zone Shutdown
__ /__ Duress
__ /__ N/A
__ /__ N/A

TAMPER REPORT CODES

TROUBLE

[197]: __ /__ Zone 1
__ /__ Zone 2
__ /__ Zone 3
__ /__ Zone 4

[198]: __ /__ Zone 5
__ /__ Zone 6
__ /__ Zone 7
__ /__ Zone 8

[199]: __ /__ Zone 9
__ /__ Zone 10
__ /__ Zone 11
__ /__ Zone 12

[200]: __ /__ Zone 13
__ /__ Zone 14
__ /__ Zone 15
__ /__ Zone 16

RESTORE

[201]: __ /__ Zone 1
__ /__ Zone 2
__ /__ Zone 3
__ /__ Zone 4

[202]: __ /__ Zone 5
__ /__ Zone 6
__ /__ Zone 7
__ /__ Zone 8

[203]: __ /__ Zone 9
__ /__ Zone 10
__ /__ Zone 11
__ /__ Zone 12

[204]: __ /__ Zone 13
__ /__ Zone 14
__ /__ Zone 15
__ /__ Zone 16

SYSTEM TROUBLE REPORT CODES

SYSTEM TROUBLE

[205]: __ /__ N/A
__ /__ AC Failure
__ /__ Battery Failure
__ /__ Auxiliary Supply

[206]: __ /__ Bell Output Overload
__ /__ Bell Output Disconnect
__ /__ Timer Loss
__ /__ Fire Loop Trbl

[207]: __ /__ Wireless Low Battery
__ /__ Module Fault
__ /__ Printer Fault
__ /__ Fail to Communicate

RESTORE

[208]: __ /__ TLM
__ /__ AC Failure
__ /__ Battery Failure
__ /__ Auxiliary Supply

[209]: __ /__ Bell Output Overload
__ /__ Bell Output Disconnect
__ /__ Timer Programmed
__ /__ Fire Loop Trbl

[210]: __ /__ Wireless Low Battery
__ /__ Module Fault
__ /__ Printer Fault
__ /__ N/A

SPECIAL

[211]: __ /__ Cold Start (Shutdown)
__ /__ Test Report
__ /__ PC Call Back
__ /__ PC Access

[212]: __ /__ Installer In
__ /__ Installer Out
__ /__ N/A
__ /__ N/A

[213]: __ /__ TX Supervision Loss
__ /__ TX Supervision Restore
__ /__ N/A
__ /__ N/A

PROGRAMMABLE - ADEMCO CONTACT ID REPORT CODE LIST

If using the Ademco Contact ID Programmable code format, enter the 2-digit hexadecimal value from the table below **(Prog. Value)** into sections [160] to [213] to program the desired report codes. **To enter a 0 value press the [FORCE] key.**

CID#	Reporting Code	Prog. Value
MEDICAL ALARMS - 100		
100	Medical Alarm	**01**
101	Pendant Transmitter	**02**
102	Fail to Report In	**03**
FIRE ALARMS - 110		
110	Fire Alarm	**04**
111	Smoke	**05**
112	Combustion	06
113	Water Flow	07
114	Heat	08
115	Pull Station	09
116	Duct	0A
117	Flame	0B
118	Near Alarm	0C
PANIC ALARMS - 120		
120	Panic Alarm	0D
121	Duress	0E
122	Silent	0F
123	Audible	10
BURGLAR ALARMS - 130		
130	Burglary	11
131	Perimeter	12
132	Interior	13
133	24-Hour	14
134	Entry/Exit	15
135	Day/Night	16
136	Outdoor	17
137	Tamper	18
138	Near Alarm	19
GENERAL ALARMS - 140		
140	General Alarm	1A
141	Polling Loop Open	1B
142	Polling Loop Short	1C
143	Expansion Module Failure	1D
144	Sensor Tamper	1E
145	Expansion Module Tamper	1F
24-HOUR NON-BURGLARY - 150 & 160		
150	24-Hour Non-Burglary	20
151	Gas Detected	21
152	Refrigeration	22
153	Loss of Heat	23
154	Water Leakage	24
155	Foil Break	25
156	Day Trouble	26
157	Low Bottled Gas Level	27
158	High Temp	28
159	Low Temp	29
161	Loss of Air Flow	2A
FIRE SUPERVISORY - 200 & 210		
200	Fire Supervisory	2B
201	Low Water Pressure	2C
202	Low CO2	2D
203	Gate Valve Sensor	2E
204	Low Water Level	2F
205	Pump Activated	30
206	Pump Failure	31
SYSTEM TROUBLES - 300 & 310		
300	System Trouble	32
301	AC Loss	33
302	Low System Battery	34
303	RAM Checksum Bad	35
304	ROM Checksum Bad	36
305	System Reset	37
306	Panel Program Changed	38
307	Self-Test Failure	39
308	System Shutdown	3A
309	Battery Test Failure	3B
310	Ground Fault	3C
SOUNDER/RELAY TROUBLES - 320		
320	Sounder Relay	3D
321	Bell 1	3E
322	Bell 2	3F
323	Alarm Relay	40
324	Trouble Relay	41
325	Reversing	42
SYSTEM PERIPHERAL TROUBLES - 330 & 340		
330	System Peripheral	43
331	Polling Loop Open	44
332	Polling Loop Short	45
333	Exp. Module Failure	46
334	Repeater Failure	47
335	Local Printer Paper Out	48
336	Local Printer Failure	49
COMMUNICATION TROUBLES - 350 & 360		
350	Communication	4A
351	Telco Fault 1	4B
352	Telco Fault 2	4C
353	Long Range Radio	4D
354	Fail to Communicate	4E
355	Loss of Radio Supervision	4F
356	Loss of Central Polling	50
PROTECTION LOOP TROUBLES - 370		
370	Protection Loop	51
371	Protection Loop Open	52
372	Protection Loop short	53
373	Fire Trouble	54
SENSOR TROUBLES - 380		
380	Sensor Trouble	55
381	Loss of Super. -RF	56
382	Loss of Super. - RPM	57
383	Sensor Tamper	58
384	RF xmtr. Low Battery	59
OPEN/CLOSE - 400		
400	Open/Close	5A
401	O/C by User	5B
402	Group O/C	5C
403	Automatic O/C	5D
404	Late to O/C	5E
405	Deferred	5F
406	Cancel	60
407	Remote Arm/Disarm	61
408	Quick Arm	62
409	Keyswitch O/C	63
REMOTE ACCESS - 410		
411	Callback Request Made	64
412	Success - Download Access	65
413	Unsuccessful Access	66
414	System Shutdown	67
415	Dialer Shutdown	68
ACCESS CONTROL - 420		
421	Access Denied	69
422	Access Report By User	6A
SYSTEM DISABLES - 500 & 510		
SOUNDER RELAY DISABLES - 520		
520	Sounder/Relay Disabled	6B
521	Bell 1 Disable	6C
522	Bell 2 Disable	6D
523	Alarm Relay Disable	6E
524	Trouble Relay Disable	6F
525	Reversing Relay Disable	70
SYSTEM PERIPHERAL DISABLES - 530 & 540		
COMMUNICATION DISABLES - 550 & 560		
551	Dialer Disabled	71
552	Radio xmitter Disabled	72
BYPASSES - 570		
570	Zone Bypass	73
571	Fire Bypass	74
572	24-Hour Zone Bypass	75
573	Burg. Bypass	76
574	Group Bypass	77
TEST/MISC. - 600		
601	Manual Trigger Test	78
602	Periodic Test Report	79
603	Periodic RF Xmission	7A
604	Fire Test	7B
605	Status Report to Follow	7C
606	Listen-in to Follow	7D
607	Walk Test Mode	7E
621	Event Log Reset	7F
622	Event Log 50% Full	80
623	Event Log 90% Full	81
624	Event Log Overflow	82
625	Time/Date Reset	83
626	Time/Date Inaccurate	84
627	Program Mode Entry	85
628	Program Mode Exit	86
631	Exception Schedule Change	87

ALL CODES - ADEMCO CONTACT ID REPORT CODE LIST

System Event	Default Contact ID Report Code *when option [3] is on in section [136]*
Arming with Master Code (##)	3 4A1 - Close by user
Arming with User Code (##)	3 4A1 - Close by user
Arming with Keyswitch (##)	3 4A9 - Keyswitch Close
Auto Arming	3 4A3 - Automatic Close
Arm with PC software	3 4A7 - Remote arm/disarm
Late To Close	3 4A4 - Late to Close
No Movement	3 4A4 - Late to Close
Partial arming	1 574 - Group bypass
Quick arming	3 408 - Quick arm
Disarm with Master Code (##)	1 4A1 - Open by user
Disarm with User Code (##)	1 4A1 - Open by user
Disarm with Keyswitch (##)	1 4A9 - Keyswitch Open
Disarm after alarm with Master Code (##)	1 4A1 - Open by user
Disarm after alarm with User Code (##)	1 4A1 - Open by user
Disarm after alarm with Keyswitch (##)	1 4A9 - Keyswitch Open
Auto Arming Cancellation	1 4A5 - Deferred Open/Close
Disarm with PC software	1 4A7 - Remote arm/disarm
Disarm after an alarm with PC software	1 4A7 - Remote arm/disarm
Zone Bypassed (##)	1 57A - Zone bypass
Zone alarm (##)	1 13A - Burglary Alarm
Fire alarm (##)	1 11A - Fire alarm
Zone alarm restore (##)	3 13A - Burglary Alarm Restore
Fire alarm restore (##)	3 11A - Fire alarm Restore
Panic 1 - Emergency	1 12A - Panic alarm
Panic 2 - Medical	1 1AA - Medical alarm
Panic 3 - Fire	1 115 - Pull Station
Recent closing	3 4AA - Open/Close
Global zone shutdown	1 574 - Group bypass
Duress alarm	1 121 - Duress
Zone shutdown (##)	1 57A - Zone bypass
Zone tampered (##)	1 144 - Sensor tamper
Zone tamper restore (##)	3 144 - Sensor tamper restore
AC Failure	1 3A1 - AC loss
Battery Failure	1 3A9 - Battery test failure
Auxiliary supply trouble	1 3AA - System trouble
Bell output current limit	1 321 - Bell 1
Bell absent	1 321 - Bell 1

System Event	Default Contact ID Report Code *when option [3] is on in section [136]*
Clock lost	1 626 - Time/Date inaccurate
Fire loop trouble	1 373 - Fire trouble
Wireless Transmitter Low Battery	1 384 - RF xmtr. low battery
Wireless Transmitter Supervision Loss	1 381 - Loss of super. - RF
Module fault	1 333 - Expansion module failure
Printer fault	1 336 - Local printer failure
Fail to communicate with central station	1 354 - Fail to communicate
TLM trouble restore	3 351 - Telco 1 fault restore
AC Failure restore	3 3A1 - AC loss restore
Battery Failure restore	3 3A9 - Battery test restore
Auxiliary supply trouble restore	3 3AA - System trouble restore
Bell output current limit restore	3 321 - Bell 1 restore
Bell absent restore	3 321 - Bell 1 restore
Clock programmed	3 626 - Time/Date Reset
Fire loop trouble restore	3 373 - Fire trouble restore
Wireless Transmitter Low Battery	3 384 - RF xmtr. low battery
Wireless Transmitter Supervision Loss	3 381 - Loss of super. - RF
Module fault restore	3 333 - Expansion module failure restore
Printer fault restore	3 336 - Local printer failure restore
Fail to communicate with central station	3 354 - Fail to communicate restore
Cold Start	1 3A8 - System shutdown
Test Report engaged	1 6A2 - Periodic test report
PC software communication finished	1 412 - Successful - download access
Installer on site	1 627 - Program mode Entry
Installer programming finished	1 628 - Program mode Exit

SYSTEM SETTINGS

Section #	Description
[280] __/__:__/__	SYSTEM REAL TIME CLOCK (HH:MM)
[281] __/__/__/__/__/__	INSTALLER CODE **Default: 000000**
[282] __/__/__	INSTALLER CODE LOCK **Default: 000** (147 to lock, 000 to unlock)

IMPORTANT NOTE: If the Access Code Length is changed from four digits to six digits when access codes have already been programmed, the control panel will automatically add the last 2 digits by using the first 2 digits. For example, if the access code is 1234 and you switch to 6 digits, the code will become 123412. Be sure to verify the access codes after switching from 4-digit access codes to 6-digit codes. When switching from six digits to four digits, the control panel will simply remove the final two digits of the access code. For example, 123456 will become 1234.

USER CODE OPTIONS

[301] __/__/__/__/__/__ SYSTEM MASTER CODE (*see note on preceeding page*) **Default: 123456**

[1] on = Partition 1 Access	**[5]** on = Force Arming
[2] on = Partition 2 Access	**[6]** on = Arm Only
[3] on = Bypass Programming	**[7]** on = PGM Activation Only
[4] on = Stay Arming	**[8]** on = Not Used

off = Option Disabled

Section #	User Code Options (on/off)								Section #	User Code Options (on/off)							
Default:	**1**		**3**	**4**					**Default:**	**1**		**3**	**4**				
[302] Master Code 1	1	2	3	4	5	6	7	8	**[325]** User Code 025	1	2	3	4	5	6	7	8
[303] Master Code 2	1	2	3	4	5	6	7	8	**[326]** User Code 026	1	2	3	4	5	6	7	8
[304] User Code 004	1	2	3	4	5	6	7	8	**[327]** User Code 027	1	2	3	4	5	6	7	8
[305] User Code 005	1	2	3	4	5	6	7	8	**[328]** User Code 028	1	2	3	4	5	6	7	8
[306] User Code 006	1	2	3	4	5	6	7	8	**[329]** User Code 029	1	2	3	4	5	6	7	8
[307] User Code 007	1	2	3	4	5	6	7	8	**[330]** User Code 030	1	2	3	4	5	6	7	8
[308] User Code 008	1	2	3	4	5	6	7	8	**[331]** User Code 031	1	2	3	4	5	6	7	8
[309] User Code 009	1	2	3	4	5	6	7	8	**[332]** User Code 032	1	2	3	4	5	6	7	8
[310] User Code 010	1	2	3	4	5	6	7	8	**[333]** User Code 033	1	2	3	4	5	6	7	8
[311] User Code 011	1	2	3	4	5	6	7	8	**[334]** User Code 034	1	2	3	4	5	6	7	8
[312] User Code 012	1	2	3	4	5	6	7	8	**[335]** User Code 035	1	2	3	4	5	6	7	8
[313] User Code 013	1	2	3	4	5	6	7	8	**[336]** User Code 036	1	2	3	4	5	6	7	8
[314] User Code 014	1	2	3	4	5	6	7	8	**[337]** User Code 037	1	2	3	4	5	6	7	8
[315] User Code 015	1	2	3	4	5	6	7	8	**[338]** User Code 038	1	2	3	4	5	6	7	8
[316] User Code 016	1	2	3	4	5	6	7	8	**[339]** User Code 039	1	2	3	4	5	6	7	8
[317] User Code 017	1	2	3	4	5	6	7	8	**[340]** User Code 040	1	2	3	4	5	6	7	8
[318] User Code 018	1	2	3	4	5	6	7	8	**[341]** User Code 041	1	2	3	4	5	6	7	8
[319] User Code 019	1	2	3	4	5	6	7	8	**[342]** User Code 042	1	2	3	4	5	6	7	8
[320] User Code 020	1	2	3	4	5	6	7	8	**[343]** User Code 043	1	2	3	4	5	6	7	8
[321] User Code 021	1	2	3	4	5	6	7	8	**[344]** User Code 044	1	2	3	4	5	6	7	8
[322] User Code 022	1	2	3	4	5	6	7	8	**[345]** User Code 045	1	2	3	4	5	6	7	8
[323] User Code 023	1	2	3	4	5	6	7	8	**[346]** User Code 046	1	2	3	4	5	6	7	8
[324] User Code 024	1	2	3	4	5	6	7	8	**[347]** User Code 047	1	2	3	4	5	6	7	8
									[348] User Code 048	1	2	3	4	5	6	7	8

LIBERATOR WIRELESS BUS MODULE (SPC-319)

The following options and features are only available to program when a ***Liberator Wireless Bus Module*** has been connected to the Spectra control panel's communication bus as shown on page 37. The Liberator Wireless Bus Module (SPC-319) allows you to add up to eight fully programmable remote controls and up to eight Liberator Wireless Detectors and Contact Switches (door contacts). The SPC-319 also provides one programmable 5A relay (PGM). A second 5A programmable relay (PGM) is available as an option.

The Liberator Wireless Bus Module does not function with the Spectra 1755, 1755EX, 1758 and 1758EX control panels. Do not connect more than one Liberator Module.

WIRELESS TRANSMITTER ASSIGNMENT (Liberator Only)

The serial number can be located on the inside of the transmitter or you can use the *Serial Number Display* (see page 23). Use the Liberator Wireless Motion Detectors (Model# 9002) and the Liberator Contact Switches (Model# 9020).

Section #	Serial #		1725EX NO ATZ	1725 WITH ATZ	1728EX NO ATZ	1728 WITH ATZ
[601]	___/___/___/___/___/___	EXPANSION INPUT 1=	Zone 6	Zone 9	Zone 8	Zone 13
[602]	___/___/___/___/___/___	EXPANSION INPUT 2=	Zone 7	Zone 10	Zone 9	Zone 14
[603]	___/___/___/___/___/___	EXPANSION INPUT 3=	Zone 8	Zone 11	Zone 10	Zone 15
[604]	___/___/___/___/___/___	EXPANSION INPUT 4=	Zone 9	Zone 12	Zone 11	Zone 16
[605]	___/___/___/___/___/___	EXPANSION INPUT 5=	Zone 10	Zone 13	Zone 12	N/A
[606]	___/___/___/___/___/___	EXPANSION INPUT 6=	Zone 11	Zone 14	Zone 13	N/A
[607]	___/___/___/___/___/___	EXPANSION INPUT 7=	Zone 12	Zone 15	Zone 14	N/A
[608]	___/___/___/___/___/___	EXPANSION INPUT 8=	Zone 13	Zone 16	Zone 15	N/A

WARNING!
Avoid assigning devices from different modules to the same Expansion Input. For example, do not assign a wireless transmitter to section [601], then connect a detection device to input 1 of a hardwire module and enable option [1] in section [651]. This would mean both devices have been assigned to the same Expansion Input.

WIRELESS MODULE OPTIONS (Liberator Only)

Bold = Default Setting

SECTION [610]: General Options

Option		OFF	ON
[1]	*Wireless Transmitter Supervision*	☐ **Disabled**	☐ Enabled
[2]	*Supervision Timer Setting (must be same as the transmitter's jumper setting)*	☐ **Low = Every 12 hours**	☐ High = Every 12 minutes
[3]	*PGM1 on Liberator follows Global PGM programmed in sections [124] & [125]*	☐ **Disabled**	☐ Enabled
[4]	*PGM2 on Liberator follows Global PGM programmed in sections [124] & [125]*	☐ **Disabled**	☐ Enabled
[5]	*Future Use*	☐ **N/A**	☐ N/A
[6]	*Future Use*	☐ **N/A**	☐ N/A
[7]	*Future Use*	☐ **N/A**	☐ N/A
[8]	*Future Use*	☐ **N/A**	☐ N/A

Section #	Decimal Value (000-255)	Description	Default Value
[615]	___/___/___ (001-008 = expansion inputs 1-8)	ZONE ASSIGNMENT FOR ON-BOARD TAMPER	*000*
[616]	___/___/___ seconds (000 = follow stop event)	PGM1 TIMER(LIBERATOR)	*5 sec.*
[617]	___/___/___ seconds (000 = follow stop event)	PGM2 TIMER (LIBERATOR)	*5 sec.*

PGM PROGRAMMING (Liberator Only)

The system will ignore sections [620] and [621] if PGM1 has been programmed to follow the Global PGM. The system will ignore sections [622] and [623] if PGM2 has been programmed to follow the Global PGM. Refer to options [3] and [4] in section [610] on page 22.

Section #	Event Group #	Sub-Group #	Partition #
[620] = PGM1 Start Event	___/___	___/___	___/___
[621] = PGM1 Stop Event *Can be used as another Start Event if section [616] is greater than 000.*	___/___	___/___	___/___
[622] = PGM2 Start Event	___/___	___/___	___/___
[623] = PGM2 Stop Event *Can be used as another Start Event if section [617] is greater than 000.*	___/___	___/___	___/___

Event Group #	Sub-Group #	Partition #
40 = Wireless Zone Opened **41 = Wireless Zone Closed** **42 = Wireless Tamper Opened** **43 = Wireless Tamper Closed** **44 = Wireless Zone - Low Battery** **45 = Wireless Zone -Battery Restore** **46 = Wireless Zone - Supervision Failure** **47 = Wireless Zone - Supervision Restore**	01 = Expansion Input 1 - Section [601] 02 = Expansion Input 2 - Section [602] 03 = Expansion Input 3 - Section [603] 04 = Expansion Input 4 - Section [604] 05 = Expansion Input 5 - Section [605] 06 = Expansion Input 6 - Section [606] 07 = Expansion Input 7 - Section [607] 08 = Expansion Input 8 - Section [608] 99 = Any transmitter	Not used; enter 00
48 = Remote Control Button Pressed	01 = Remote Control #1 - Section [721]/[731] 02 = Remote Control #2 - Section [722]/[732] 03 = Remote Control #3 - Section [723]/[733] 04 = Remote Control #4 - Section [724]/[734] 05 = Remote Control #5 - Section [725]/[735] 06 = Remote Control #6 - Section [726]/[736] 07 = Remote Control #7 - Section [727]/[737] 08 = Remote Control #8 - Section [728]/[738] 99 = Any remote control	01 = Button A 02 = Button B 03 = Button C 04 = Button D 05 = Button A & B 06 = Button C & D 07 = Button A & C 08 = Button B & D
49 = On-board tamper (receiver)	01 = Tamper Open 02 = Tamper Closed 99 = Tamper opened or closed	Not used; enter 00

SERIAL NUMBER DISPLAY

[630] STEP 1: Enter section **[630]**

STEP 2: Press the tamper switch of the desired wireless transmitter or press any two buttons on the desired remote control. The keypad will emit a confirmation beep.

STEP 3: On LED keypads the digits will appear one at a time by illuminating the corresponding light. To view the next digit press the [ENTER] key. On LCD keypads the entire serial number will appear on the screen.

STEP 4: Return to STEP 2 to continue or press [CLEAR] to exit the *Serial Number Display*.

SIGNAL STRENGTH DISPLAY

Enter the section (see next page) corresponding to the desired Expansion Input, then activate the transmitter by opening/closing the zone or by pressing the tamper switch. NOTE: after entering the section, ignore the first reading as it won't be accurate. **LED Keypad:** Lights numbered from one to eight will illuminate. An average reading of 3 and up is acceptable. **LCD Keypad:** One to eight characters will appear on the screen. An average reading of 3 characters and up is acceptable.

Section #	Description
[631]	Display Signal Strength of Expansion Input 1 - Section [601]
[632]	Display Signal Strength of Expansion Input 2 - Section [602]
[633]	Display Signal Strength of Expansion Input 3 - Section [603]
[634]	Display Signal Strength of Expansion Input 4 - Section [604]
[635]	Display Signal Strength of Expansion Input 5 - Section [605]
[636]	Display Signal Strength of Expansion Input 6 - Section [606]
[637]	Display Signal Strength of Expansion Input 7 - Section [607]
[638]	Display Signal Strength of Expansion Input 8 - Section [608]

LIBERATOR MODULE (SPC-319) RESET

[640] PRESS **[ENTER]** TO CONFIRM. WILL RESET THE LIBERATOR MODULE'S SECTIONS [601] TO [624] TO DEFAULT VALUES.

ZONE EXPANSION MODULES (SPC-ZX4/8)

The following options and features are only available to program when a ***Zone Expansion Bus Module*** has been connected to the Spectra control panel's communication bus as shown on page 37. The Zone Expansion Modules provide you with up to 4 (SPC-ZX4) or up to eight (SPC-ZX8) additional hardwired inputs and one normally open 50mA PGM output (on SPC-ZX8 only).

Do not connect more than one Zone Expansion Module.

Bold = Default Setting

SECTION [650]: Options

Option		OFF	ON
[1]	*EOL (end-of-line) Resistors for hardwire modules*	☐ **No EOL**	☐ Use EOL Resistors
[2]	*Zone Expansion Module Tamper Recognition*	☐ **Disabled**	☐ Z1 becomes tamper input
[3]	*PGM1 on Zone Expansion Module follows Global PGM programmed in sections [124] & [125]*	☐ **Disabled**	☐ Enabled
[4]	*Future Use*	☐ **N/A**	☐ N/A
[5]	*Future Use*	☐ **N/A**	☐ N/A
[6]	*Future Use*	☐ **N/A**	☐ N/A
[7]	*Future Use*	☐ **N/A**	☐ N/A
[8]	*Future Use*	☐ **N/A**	☐ N/A

SECTION [651]: Zone Assignment

Option	OFF	ON	1725EX 1755EX NO ATZ	1725 1755 WITH ATZ	1728EX 1758EX NO ATZ	1728 1758 WITH ATZ
[1]	☐ **Disabled**	☐ *Z1 = Expan. Input 1 =*	Zone 6	Zone 9	Zone 8	Zone 13
[2]	☐ **Disabled**	☐ *Z2 = Expan. Input 2 =*	Zone 7	Zone 10	Zone 9	Zone 14
[3]	☐ **Disabled**	☐ *Z3 = Expan. Input 3 =*	Zone 8	Zone 11	Zone 10	Zone 15
[4]	☐ **Disabled**	☐ *Z4 = Expan. Input 4 =*	Zone 9	Zone 12	Zone 11	Zone 16
[5]	☐ **Disabled**	☐ *Z5 = Expan. Input 5 =*	Zone 10	Zone 13	Zone 12	N/A
[6]	☐ **Disabled**	☐ *Z6 = Expan. Input 6 =*	Zone 11	Zone 14	Zone 13	N/A
[7]	☐ **Disabled**	☐ *Z7 = Expan. Input 7 =*	Zone 12	Zone 15	Zone 14	N/A
[8]	☐ **Disabled**	☐ *Z8 = Expan. Input 8 =*	Zone 13	Zone 16	Zone 15	N/A

WARNING!
Avoid assigning devices from different modules to the same Expansion Input. For example, do not assign a wireless transmitter to section [601], then connect a detection device to Z1 of a hardwire module and enable option [1] in section [651]. This would mean both devices have been assigned to the same Expansion Input.

PGM TIMER (Zone Module SPC-ZX8 Only)

[655] ___/___/___seconds (000 = follow stop event) PGM1 TIMER (HARDWIRE) *5 sec. (default)*

PGM PROGRAMMING (Zone Module SPC-ZX8 Only)

The system will ignore sections [656] and [657] if PGM1 has been programmed to follow the Global PGM. Refer to option [3] in section [650] on page 25.

Section #	Event Group #	Sub-Group #	Partition #
[656] = PGM1 Start Event	___/___	___/___	___/___
[657] = PGM1 Stop Event *Can be used as another Start Event if section [655] is greater than 000.*	___/___	___/___	___/___

Event Group #	Sub-Group #	Partition #
60 = Hardwire Zone Opened **61 = Hardwire Zone Closed** **62 = Hardwire Tamper Opened** **63 = Hardwire Tamper Closed**	01 = Expansion Input 1 - Section [651] - [1] 02 = Expansion Input 2 - Section [651] - [2] 03 = Expansion Input 3 - Section [651] - [3] 04 = Expansion Input 4 - Section [651] - [4] 05 = Expansion Input 5 - Section [651] - [5] 06 = Expansion Input 6 - Section [651] - [6] 07 = Expansion Input 7 - Section [651] - [7] 08 = Expansion Input 8 - Section [651] - [8] 99 = Any zone input	Not used; enter 00

The PGM will only activate or de-activate 100mS after any of the above events have occurred (if programmed).

RESET ZONE EXPANSION MODULE

[660] PRESS **[ENTER]** TO CONFIRM. WILL RESET THE ZONE MODULE'S SECTIONS [650] TO [657] TO DEFAULT VALUES.

USER ASSIGNMENT

Section #	Decimal Value	Description	Default Value
[701]	___/___/___ (001-048 = USER #)	REMOTE CONTROL #1 - SECTION [721]/[731]	*000*
[702]	___/___/___ (001-048 = USER #)	REMOTE CONTROL #2 - SECTION [722]/[732]	*000*
[703]	___/___/___ (001-048 = USER #)	REMOTE CONTROL #3 - SECTION [723]/[733]	*000*
[704]	___/___/___ (001-048 = USER #)	REMOTE CONTROL #4 - SECTION [724]/[734]	*000*
[705]	___/___/___ (001-048 = USER #)	REMOTE CONTROL #5 - SECTION [725]/[735]	*000*
[706]	___/___/___ (001-048 = USER #)	REMOTE CONTROL #6 - SECTION [726]/[736]	*000*
[707]	___/___/___ (001-048 = USER #)	REMOTE CONTROL #7 - SECTION [727]/[737]	*000*
[708]	___/___/___ (001-048 = USER #)	REMOTE CONTROL #8 - SECTION [728]/[738]	*000*

BUTTON PROGRAMMING

Two-button Remote Control

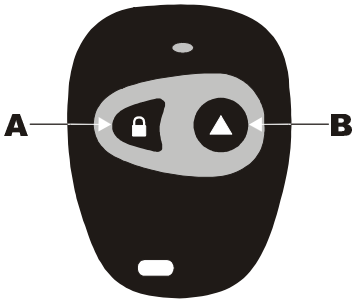

With Liberator Wireless Bus Module
Model# 329 (900MHz)
Model# 328 (868MHz)

With Spectra 1755EX and 1758EX
Model# 323 (318MHz)
Model# 324 (433MHz)

Four-button Remote Control

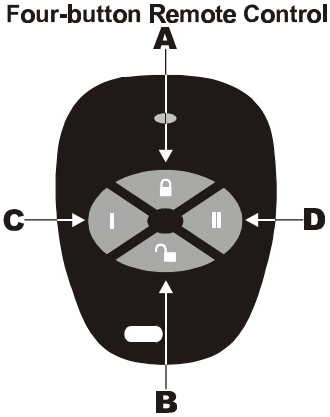

With Liberator Wireless Bus Module
Model# 349 (900MHz)
Model# 348 (868MHz)

With Spectra 1755EX and 1758EX
Model# 343 (318MHz)
Model# 344 (433MHz)

Button Options Table

Empty [FORCE] - Button disabled
1 - Regular Arming
2 - Stay Arming
3 - Instant Arming
4 - Force Arming
5 - Disarm
6 - Disarm when no alarm
7 - Regular Arm and Disarm
8 - Panic 1
9 - Panic 2
A - Panic 3
B - PGM Activation *(Event Group #7 see PGM Programming on page 9)*
C - PGM Activation *(Event Group #8 see PGM Programming on page 9)*
D - PGM Activation *(Event Group #9 see PGM Programming on page 9)*

Section # **Hexa Value:** Each digit is a value from 1 to D (see Button Options Table)

[711] ____/____/____/____/____/____/____/____ REMOTE CONTROL #1
A B C D A+B C+D A+C B+D

[712] ____/____/____/____/____/____/____/____ REMOTE CONTROL #2
A B C D A+B C+D A+C B+D

[713] ____/____/____/____/____/____/____/____ REMOTE CONTROL #3
A B C D A+B C+D A+C B+D

[714] ____/____/____/____/____/____/____/____ REMOTE CONTROL #4
A B C D A+B C+D A+C B+D

[715] ____/____/____/____/____/____/____/____ REMOTE CONTROL #5
A B C D A+B C+D A+C B+D

[716] ____/____/____/____/____/____/____/____ REMOTE CONTROL #6
A B C D A+B C+D A+C B+D

[717] ____/____/____/____/____/____/____/____ REMOTE CONTROL #7
A B C D A+B C+D A+C B+D

[718] ____/____/____/____/____/____/____/____ REMOTE CONTROL #8
A B C D A+B C+D A+C B+D

WARNING!
Please note that the User Code assigned to the remote control (sections [701] to [708]) must have the same User Options enabled. For example, if you enable the Force Arming button option you must enable the appropriate Force Arming user option. Also, if you enable any of the Panic button options, you must enable the Panic options in the control panel.

REMOTE CONTROL ASSIGNMENT (Liberator Only)

Section # **Serial #**

[721] ___/___/___/___/___/___REMOTE CONTROL #1

[722] ___/___/___/___/___/___REMOTE CONTROL #2

[723] ___/___/___/___/___/___REMOTE CONTROL #3

[724] ___/___/___/___/___/___REMOTE CONTROL #4

[725] ___/___/___/___/___/___REMOTE CONTROL #5

[726] ___/___/___/___/___/___REMOTE CONTROL #6

[727] ___/___/___/___/___/___REMOTE CONTROL #7

[728] ___/___/___/___/___/___REMOTE CONTROL #8

NOTE: *Use the Serial Number Display (see page 23) to find out the serial number of a remote control. To delete a remote control, enter the desired section then enter a value of 000000.*

REMOTE CONTROL ASSIGNMENT (1755, 1755EX, 1758 and 1758EX Panels Only)

Section #

[731] PRESS A BUTTON ON A REMOTE CONTROL TWICE. YOU WILL HEAR A CONFIRMATION BEEP = REMOTE CONTROL #1

[732] PRESS A BUTTON ON A REMOTE CONTROL TWICE. YOU WILL HEAR A CONFIRMATION BEEP = REMOTE CONTROL #2

[733] PRESS A BUTTON ON A REMOTE CONTROL TWICE. YOU WILL HEAR A CONFIRMATION BEEP = REMOTE CONTROL #3

[734] PRESS A BUTTON ON A REMOTE CONTROL TWICE. YOU WILL HEAR A CONFIRMATION BEEP = REMOTE CONTROL #4

[735] PRESS A BUTTON ON A REMOTE CONTROL TWICE. YOU WILL HEAR A CONFIRMATION BEEP = REMOTE CONTROL #5

[736] PRESS A BUTTON ON A REMOTE CONTROL TWICE. YOU WILL HEAR A CONFIRMATION BEEP = REMOTE CONTROL #6

[737] PRESS A BUTTON ON A REMOTE CONTROL TWICE. YOU WILL HEAR A CONFIRMATION BEEP = REMOTE CONTROL #7

[738] PRESS A BUTTON ON A REMOTE CONTROL TWICE. YOU WILL HEAR A CONFIRMATION BEEP = REMOTE CONTROL #8

NOTE: *If you hear rejection beep, an error has occurred or the remote control has already been assigned. To delete a remote control, enter the desired section then press the [FORCE] key.*

REPROGRAM ALL MODULES

[750] AFTER REMOVING AN EXPANSION MODULE FROM THE COMMUNICATION BUS, THE CONTROL PANEL KEEPS THE MODULE'S PROGRAMMED SECTIONS IN MEMORY. THEREFORE, IF YOU ADD OR REPLACE A MODULE YOU CAN RE-PROGRAM THE MODULE WITH THE SETTINGS SAVED IN THE CONTROL PANEL. TO DO SO, ENTER SECTION **[750]** AND PRESS **[ENTER]**. THE KEYPADS WILL BEEP TWICE EVERY SECOND UNTIL THE PROCEDURE IS COMPLETED.

PARADOX MEMORY KEY

[900] DOWNLOAD FROM PARADOX MEMORY KEY TO DESTINATION CONTROL PANEL (FOR DETAILS SEE PAGE 5).

[902] COPY TO MEMORY KEY FROM SOURCE CONTROL PANEL (FOR DETAILS SEE PAGE 5).

TROUBLE DISPLAY

The Spectra system continuously monitors fourteen possible trouble conditions. When a trouble condition occurs, the [TBL] button or [TRBL] indicator will illuminate on the LED keypads or "Trouble" will appear on the LCD keypad's screen. Press the **[TBL]** or **[TRBL]** button to switch to the *Trouble Display*. The **[TBL]** button or **[TRBL]** indicator will flash and lights corresponding to an existing trouble condition will illuminate on the LED keypads (see below) or the appropriate trouble message will appear on the LCD keypad. Press the **[CLEAR]** button to exit the *Trouble Display*.

Please note that the keypad can be programmed to emit a "BEEP" every 5 seconds whenever a new trouble condition has occurred. Pressing the **[TBL]** or **[TRBL]** button will stop the "beeping".

LED #	Description	Details
[1]	No/Low Battery Failure	The control panel performs a dynamic battery test under load every 60 seconds. This trouble indicates that the back-up battery is disconnected or that the battery should be replaced, as it will not provide adequate back-up current in case of AC loss. This trouble will also appear when the control panel is running on battery power and the battery voltage has dropped to 10.5 volts or lower. This means the battery must be recharged or replaced.
[2]	Wireless Transmitter Low Battery	This means the battery voltage of a *Liberator* wireless transmitter has dropped to 6.5V or less. Also, the yellow LED on the transmitter can flash to indicate this trouble. The battery should be replaced.
[3]	Power Failure	Upon power failure, the AC LED on all keypads will turn off. The control panel can transmit the report code programmed in section **[205]**. This report code can be delayed by programming a Power Failure Report Delay in section **[086]**. The AC LED turns back on as soon as power is restored.
[4]	Bell or PGM2 Disconnected	There is no bell or siren connected to the bell output terminals of the control panel or there is no device connected to the PGM2 terminals (1755, 1755EX, 1758 and 1758EX only). If you are not using the BELL or PGM2 terminals, the trouble indicator will always be on. To avoid this, connect a 1KΩ resistor across the bell or PGM2 output.
[5]	Maximum Bell Current	The BELL output uses a fuseless circuit and will automatically shut down if the current exceeds 3A with a 1725, 1725EX, 1728, or 1728EX or 2.5A with a 1755, 1755EX, 1758, or 1758EX . After opening the short or reducing the load, the bell current is restored upon the following alarm generation. This trouble indicator will only appear when a condition has occured that would activate the bell output (e.g. during an alarm).
[6]	Maximum Auxiliary Current	The auxiliary output uses a fuseless circuit to protect the power supply against current overload and automatically shuts down if the current exceeds 1.1A. After opening the short or reducing the load, the panel will restore power to the auxiliary output.
[7]	Communicator Report Fail	The control panel has failed all attempts to communicate with the central monitoring station.
[8]	Timer Loss	The control panel's internal clock must be re-programmed. To re-program the timer press the **[8]** key and enter the current time using the 24-hour clock (i.e. 8:30PM = 20:30).
[9]	Tamper/Zone Wiring Fail	If the Tamper Recognition options are enabled, this trouble indicates a wiring problem on one or more zones or that the cover has been removed on one or more wireless transmitters. In order to provide line short recognition the zone connections must have EOL resistors. If you press the **[9]** key, the keypad will display which zones are in trouble.
[10]	Telephone Line Monitoring	If the Telephone Line Monitoring (TLM) feature is enabled (see section [135]), this trouble indicates that the control panel has not detected the presence of a telephone line for 30 sec.
[STAY] OR [11]	Fire Loop Trouble	Denotes a wiring problem on zone 3, if defined as a Fire Zone.
[FORCE] or [16]	Keypad Fault	If the keypad is no longer communicating with the control panel, the [TBL] or [TRBL] will flash, the [FORCE] key will illuminate (the LCD keypad displays "Keypad Fault") and the keypad will emit four consecutive beeps at 5-second intervals. Press any key on the keypad to terminate the "beeping" sequence. When communication has been restored, the system will revert to previous status.
[BYP] OR [12]	Module Loss	A Liberator or zone module is no longer communicating with the control panel.
[MEM] OR [13]	Wireless Transmitter Supervision Loss	One or more wireless transmitters are no longer communicating with the receiver. If you press the [MEM] key, the keypad will display which zones are in trouble.

PARTITIONING

The ***Spectra*** system is equipped with a partitioning feature which can divide the alarm system into two distinct areas identified as Partition 1 and Partition 2. Partitioning can be used in installations where shared security systems are more practical, such as an office/warehouse building. When partitioned, each zone, each User Code and some of the system's features can be assigned to either Partition 1, Partition 2, or both partitions. ***If the system is not partitioned, all User Codes and features will be recognized as belonging to partition 1.***

How does a partitioned system work?

- Users can only arm/disarm partitions to which they have been assigned.
- Only zones assigned to Partition 1 will arm/disarm when Partition 1 is armed or disarmed.
- Only zones assigned to Partition 2 will arm/disarm when Partition 2 is armed or disarmed.
- Zones assigned to both partitions will arm when both partitions are armed and will disarm when at least one partition disarms.
- Some of the system's features can be programmed separately for each partition.

PROGRAMMING ACCESS CODES

Access Codes are personal identification numbers that allow users to enter certain programming modes, arm or disarm the alarm system as well as activate or deactivate PGMs. The ***Spectra*** security system supports the following:

System Master Code can arm or disarm any partition using any arming method and can create, modify or delete any *User Access Code.* Only the System Master Code can modify or delete User Access Codes assigned to both partitions.

Master Code 1 is permanently assigned to partition 1 and can be used to create, modify or delete *User Access Codes* that are assigned to partition 1.

Master Code 2 is permanently assigned to partition 2 (except when partitioning is disabled, *Master Code 2* will be assigned to partition 1) and can be used to create, modify or delete *User Access Codes* that are assigned to the same partition.

45 *User Access Codes* (including 1 Duress code)

How Do I Program Access Codes?

1) Press **[ENTER]**
2) Key in the **[SYSTEM MASTER CODE]** or **[MASTER CODE]**
3) Key in 3-digit **[SECTION]** (see *Table* below)
4) Key in new 4 or 6-digit **[ACCESS CODE]**
   [ENTER] flashes. Return to step 3

How Do I Delete Access Codes?

1) Repeat steps 1 to 3 (see above)
2) Press the **[FORCE]** button once for each digit in the access code (4 or 6 times) until the keypad emits a "CONFIRMATION BEEP"

Section	User Codes
[001]	User Code 001 = *System Master Code*
[002]	User Code 002 = *Master Code 1*
[003]	User Code 003 = *Master Code 2*
[004] to [047]	*User Code 004* to *User Code 047*
[048]	*User Code 048* or *Duress Code*

DISARMING & DEACTIVATING AN ALARM

To disarm an already armed system or to deactivate an alarm simply key in a valid access code. Program a designated entry/exit point, such as the front door or the garage door with an *Entry Delay Timer*. When these entry/exit point are opened (breached), it will set off a timer. The system will not generate an alarm until this timer elapses, giving users enough time to enter the premises and disarm the system. Any user can disarm the system, except users have been assigned the *Arm Only Option*.

How Do I Disarm the System or Deactivate an Alarm?

1) Key in your **[ACCESS CODE]**
   The arm or alarm indication will turn off and the keypad will emit a "CONFIRMATION BEEP".

IF YOU HAVE ACCESS TO BOTH PARTITIONS:

2) Press the button corresponding to the partition you wish to *Disarm* or to *Disarm* both partitions, press the **[1]** key then after the confirmation beep press the **[2]** key.

REGULAR ARMING

This method, commonly used for day-to-day arming, will arm all the zones in the selected partition.

How Do I Regular Arm?

1) Green "**READY**" indicator must be illuminated. Unless the system is partitioned, in which case all zones in the desired partition must be closed.
2) Key in a valid **[ACCESS CODE]**

IF YOU HAVE ACCESS TO BOTH PARTITIONS:

3) Press the button corresponding to the partition you wish to *Arm.* To *Arm* both partitions, press the **[1]** key then after the confirmation beep press the **[2]** key.

If you make a mistake, the keypad will emit a "REJECTION BEEP". When you have correctly armed the system, the appropriate "ARM" indication will turn on and the *Exit Delay* will be initiated. Please note that *Regular Arming* can also be activated using *Auto-Arming*, a *Keyswitch* or using *One-Touch Arming*.

STAY ARMING

This method allows users to remain in the protected area while partially arming the system. For example, when going to sleep at night, entry/exit points like doors and windows can be armed while other zones like motion detectors remain deactivated. Please note that *Fire Zones* can not be bypassed.

How Do I Stay Arm?

1) All zones in the desired partition (except *Stay Zones*) must be closed.
2) Press the **[STAY]** button
3) Key in a valid **[ACCESS CODE]**

IF YOU HAVE ACCESS TO BOTH PARTITIONS:

4) Press the button corresponding to the partition you wish to *Stay Arm.* To *Stay Arm* both partitions, press the **[1]** key then after the confirmation beep press the **[2]** key.

If you make a mistake, the keypad will emit a "REJECTION BEEP". When you have correctly *Stay Armed* the system, the appropriate "ARM" indication will appear and the *Exit Delay* will be initiated. *Stay Arming* can also be activated using *Auto-Arming*, *Keyswitch Arming* or using *One-Touch Arming*. Also note that the User Code must have the *Stay Arming Option* enabled.

INSTANT ARMING

After *Stay Arming* the system and **during its *Exit Delay*,** press and hold the **[STAY]** button for 3 seconds**.** You should hear a "CONFIRMATION BEEP". This will switch all armed zones to *Instant zones*.

If you have access to both partitions:
To Instant Arm one partition, press [STAY] + [ACCESS CODE] + [SELECT PARTITION] + [CLEAR] + press & hold [STAY]
To Instant Arm both partitions, press [STAY] + [ACCESS CODE] + [1] + [2] + press & hold [STAY]

FORCE ARMING

Force Arming allows users to rapidly arm the system, without having to wait for all zones in the system to be closed. *Force Arming* is commonly used when a motion detector is protecting the area occupied by a keypad. Therefore, when arming the system, if the motion detector is set as a *Force Zone*, the control panel will ignore the zone and allow users to arm the system even if the zone is open. Any open *Force Zones* at the time of arming will be considered "deactivated" by the control panel. If during this period a "deactivated" zone is closed, the control panel will revert that zone to "active" status, hence, will generate an alarm if breached.

How Do I Force Arm?

1) All zones in the desired partition (except *Force Zones*) must be closed.
2) Press the **[FORCE]** button
3) Key in a valid **[ACCESS CODE]**

IF YOU HAVE ACCESS TO BOTH PARTITIONS:
4) Press the button corresponding to the partition you wish to *Arm.* To *Arm* both partitions, press the **[1]** key then after the confirmation beep press the **[2]** key.

If you make a mistake, the keypad will emit a "REJECTION BEEP". When correctly *Force Armed*, the appropriate "ARM" indication will appear and the *Exit Delay* will be initiated. Please note that *Force Arming* can also be activated using *One-Touch Force Arming*. Also note that the *Access Code* must have the *Force Arming Option* enabled.

MANUAL BYPASS PROGRAMMING

Manual Bypass Programming allows users to program the alarm system to ignore ("deactivate") specified zones the next time the system is armed. Please note that *Fire Zones* can not be bypassed and that *Manual Bypass Programming* can also be activated using *One-Touch Bypass Programming*.

How do I Program Bypass Entries?

1) Press the **[BYP]** button.
2) Key in a valid **[ACCESS CODE]***
3) Select one or more **[ZONES]** you wish to bypass
4) Once you have entered the desired bypass entries, press the **[ENTER]** button to accept these entries.

*If you have access to both partitions, press the button corresponding to the desired partition. The *Access Code* must have the *Bypass Programming Option* enabled.

BYPASS RECALL FEATURE

After disarming the system, the control panel will erase the bypass entries. By using the *Bypass Recall Feature*, you can reinstate the previous bypass entries saved in memory. This eliminates the need to manually program the bypass entries every time you arm the system.

How Do I Recall Bypass Entries?

1) Press the **[BYP]** button.
2) Key in your **[ACCESS CODE]***
3) Press the **[BYP]** button.
4) Press the **[ENTER]** button.

*If you have access to both partitions, press the button corresponding to the desired partition. The *Access Code* must have the *Bypass Programming Option* enabled.

ONE-TOUCH ARMING

One-Touch Arming allows users to arm the system without the use of an access code, simply press and hold a button. *One-Touch Arming* can be used to allow specific individuals like service personnel (i.e. cleaners, maintenance) to arm the system when leaving the protected area, without giving them access to any other alarm system operations.

One-Touch Regular Arming
Press and hold the **[ENTER]** button for 3 seconds* to arm all zones in the partition.

One-Touch Force Arming
Press and hold the **[FORCE]** button for 3 seconds* to bypass any open *Force Zones*.

One-Touch Bypass Programming
Press and hold the **[BYP]** button for 3 seconds* to access *Bypass Programming Mode*.

One-Touch Stay Arming
Press and hold the **[STAY]** button for 3 seconds* to arm all zones not defined as *Stay Zones*.

Fast Exit *- When the system is already Stay Armed:*
To Exit and Stay Arm: Press and hold the **[STAY]** button for 3 seconds*. The system will switch to *Exit Delay* mode. At the end of the *Exit Delay* period, the system will return to *Stay Arming*.
To Exit and Regular Arm: Press and hold the **[ENTER]** button for 3 seconds*. The system will switch to *Exit Delay* mode. At the end of the *Exit Delay* period, the control panel will switch to *Regular Arming*.
To Exit and Force Arm: Press and hold the **[FORCE]** button for 3 seconds*. The system will switch to *Exit Delay* mode. At the end of the *Exit Delay* period, the control panel will switch to *Force Arming*.

***** If you have access to both partitions after activating a one-touch feature, press the button corresponding to the desired partition. To select both partitions, press the **[1]** key then after the confirmation beep press the **[2]** key.

KEYSWITCH ARMING

A keyswitch can be used to arm and disarm the system. Assign the keyswitch to a specific partition and program the keyswitch to *Stay* or *Regular Arm* the assigned partition. Also program the keyswitch to function as a Maintained or Momentary keyswitch. To arm the system using a Maintained Keyswitch, set the keyswitch to the "on" position. To disarm the system set the keyswitch to the "off" position. To arm the system using a Momentary Keyswitch, set the keyswitch to the "on" position then turn it back to the "off" position. Repeating this sequence will disarm the system.

PANIC ALARMS

In case of emergency, the ***Spectra*** system provides up to three panic alarms. These panic alarms, if programmed, will immediately generate an alarm after pressing and holding two specific buttons for two seconds, as described below.

Press and hold buttons **[1]** and **[3]** for a panic alarm.
Press and hold buttons **[4]** and **[6]** for a panic or medical alarm.
Press and hold buttons **[7]** and **[9]** for a panic or fire alarm.

AUTO-ARMING

You can program the ***Spectra*** alarm panel to automatically arm at a specific time everyday or if no movement is detected for a specified period of time. The user is only allowed to program the Auto Arm Timer. *Please note that the control panel will enter a 60-second Exit Delay period before arming the system. At this point, Auto-Arming can be cancelled by entering a valid access code.*

ALARM MEMORY DISPLAY

A record of all alarm situations that occur will be stored in memory. After disarming the system, pressing the **[MEM]** button will display which zones were in alarm during the last armed period. To exit the *Alarm Memory Display*, press the **[CLEAR]** button. The control panel will erase the contents of the alarm memory every time the system is armed.

PROGRAMMING CHIME ZONES

This feature allows users to program which zones will be *"Chime Enabled"*. A *"Chime Enabled"* zone will cause the keypad to emit a rapid intermittent beep tone (BEEP-BEEP-BEEP-BEEP) advising the user every time it is opened. Each keypad must be Chime Programmed separately. Keypad chimes must be re-programmed if the system suffers a total power loss.

10-Zone LED Keypad:
Press and hold any button from **[1]** to **[10]** for 3 seconds to activate or deactivate *Chiming* for zones 1 to 10. For example, press and hold the [1] button to enable chiming on zone 1. If after pressing and holding a button, the keypad emits a confirmation beep, this means the chime feature has been enabled for that zone. If the keypad emits a rejection beep, this means the chime feature has been disabled for the corresponding zone.

16-Zone LED Keypad:
Press and hold the **[9]** button. Enter the 2-digit (**01 to 16**) zone number(s). When the corresponding LED is on, the zone is chimed. When the corresponding LED is off, the zone is unchimed. When the desired zones are chimed, press **[ENTER]**.

LCD Keypad:
Press and hold the **[9]** button. Enter the 2-digit (**01 to 16**) zone number(s), or use the arrow keys to scroll through the zones. and when the appropriate zone is displayed, press the **[FNC1]** button. When the desired zones are chimed, press **[ENTER]**.

KEYPAD MUTING

Press and hold the **[CLEAR]** button for 3 seconds to enable or disable keypad muting. When muted, the keypad will only “beep” when a button is pressed or when the keypad emits a rejection or confirmation beep. All other “beep” functions are disabled.

QUICK FUNCTION KEYS

Installer Test Mode
[ENTER] + [INSTALLER CODE] + [TBL] or [TRBL]
The Installer Test Mode allows you to perform walk tests where the bell/siren will squawk once to indicate an open zone and twice to indicate a closed zone. To enter this mode, press [ENTER] + [INSTALLER CODE] + [TBL] or [TRBL]. The keypad will emit a confirmation beep. To disable this mode, press the [TBL] or [TRBL] key again. The keypad will emit a rejection beep.

Test Report
[ENTER] + [INSTALLER/MASTER CODE] + [MEM]
Sends the "Test Report" report code programmed in section [211] to the central station.

Call WinLoad Software
[ENTER] + [INSTALLER/MASTER CODE] + [BYP]
This feature is used to establish communication between the control panel and a computer using the WinLoad Software. After entering this mode the control panel will dial the telephone number programmed in section [150].

Cancel Communication
[ENTER] + [INSTALLER/MASTER CODE] + [STAY]
Cancels all communication until the next reportable event. If the Master Code was used, only communication with WinLoad would be cancelled.

Answer WinLoad Software
[ENTER] + [INSTALLER/MASTER CODE] + [FORCE]
Forces the control panel to pick-up an incoming telephone call.

SINGLE ZONE INPUTS

N.C. Contacts, No EOL

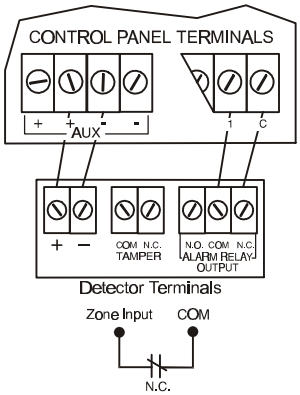

N.C., With EOL
UL/ULC Configuration

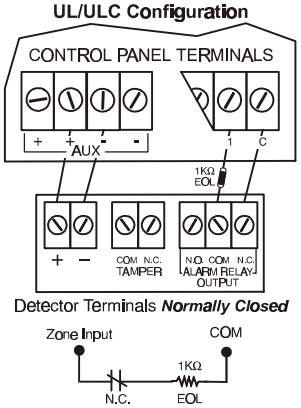

N.O., With EOL
UL/ULC Configuration

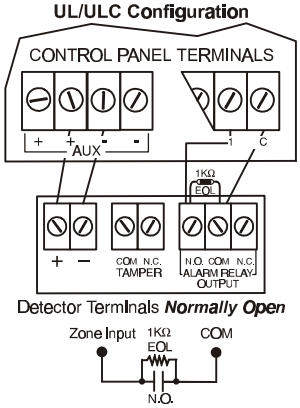

N.C. Contacts, No EOL, With Tamper Recognition

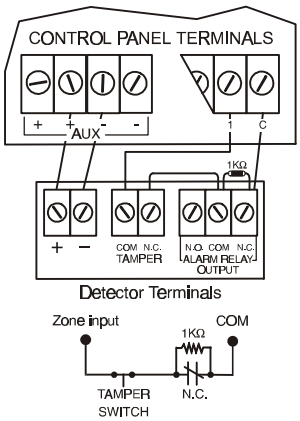

N.C., With EOL, With Tamper & Wire Fault Recognition (UL/ULC)

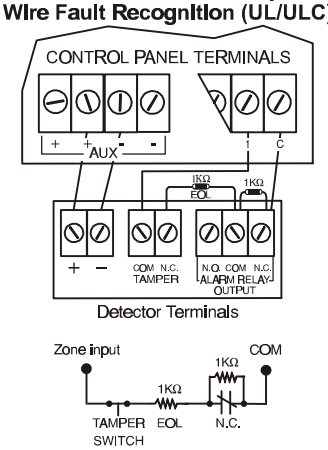

DOUBLE ZONE INPUTS (with ATZ option only)

N.C. Contact, No EOL Resistor

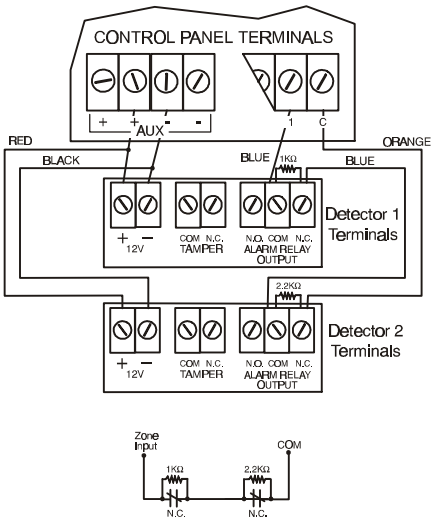

N.C. Contact, No EOL, With Tamper Recognition

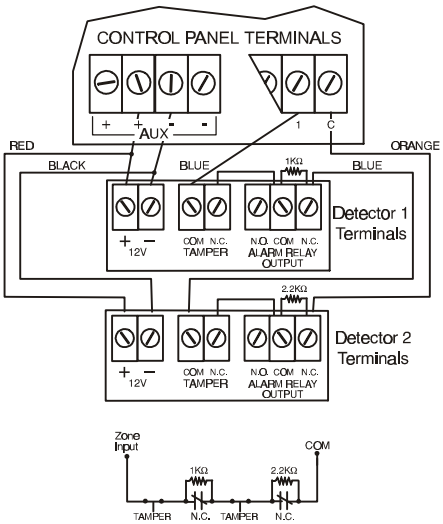

N.C. Contacts, With EOL, With Tamper & Wire Fault Recognition (UL/ULC)

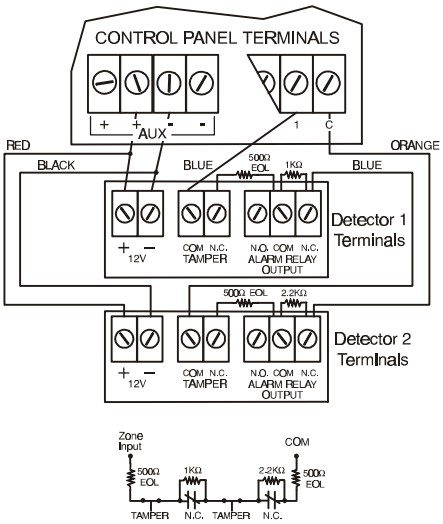

CONNECTING A KEYSWITCH

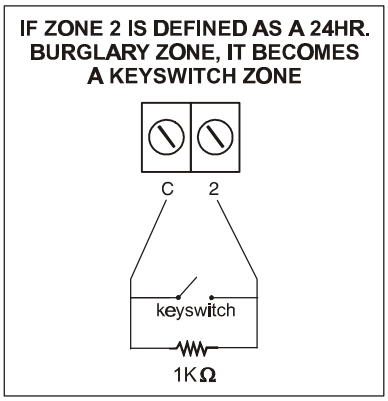

CONNECTING FIRE CIRCUITS

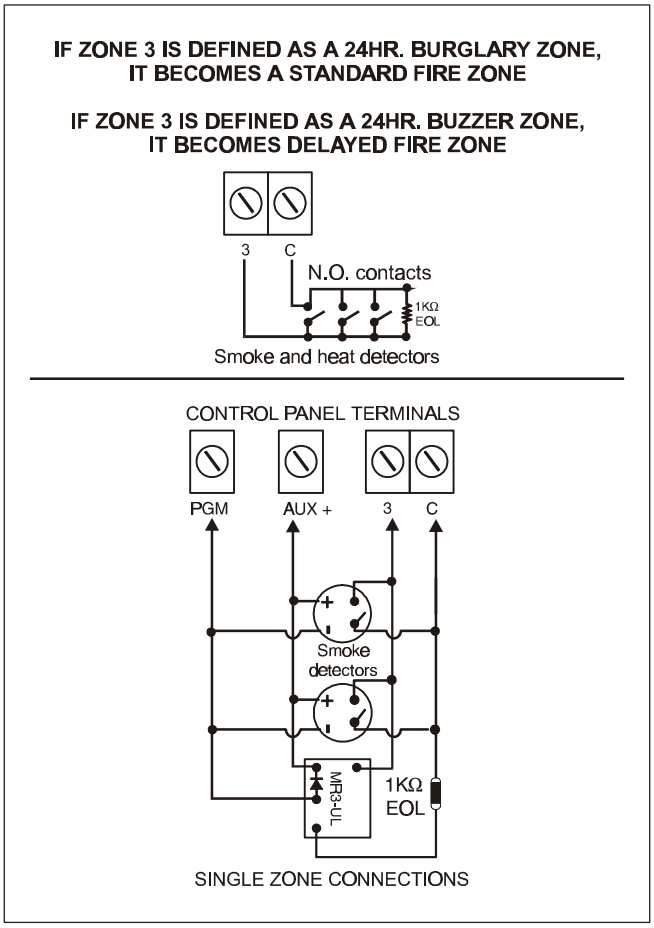

PGM CONNECTIONS

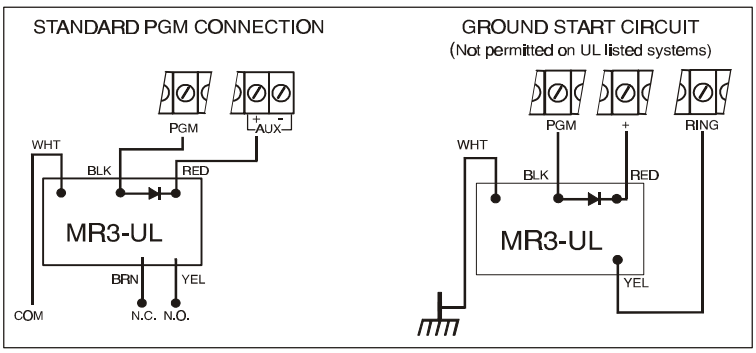

CONNECTING A LIBERATOR WIRELESS BUS MODULE (SPC-319)

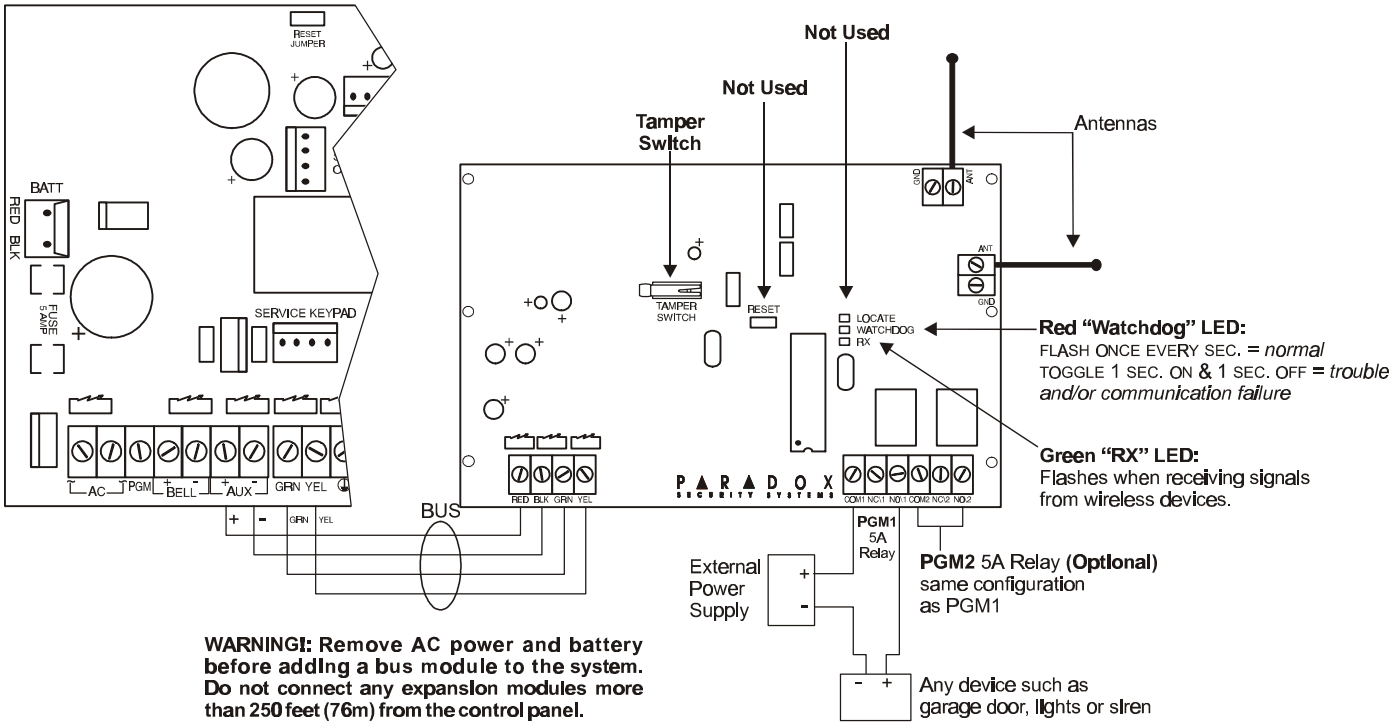

CONNECTING A ZONE EXPANSION MODULE (SPC-ZX8)

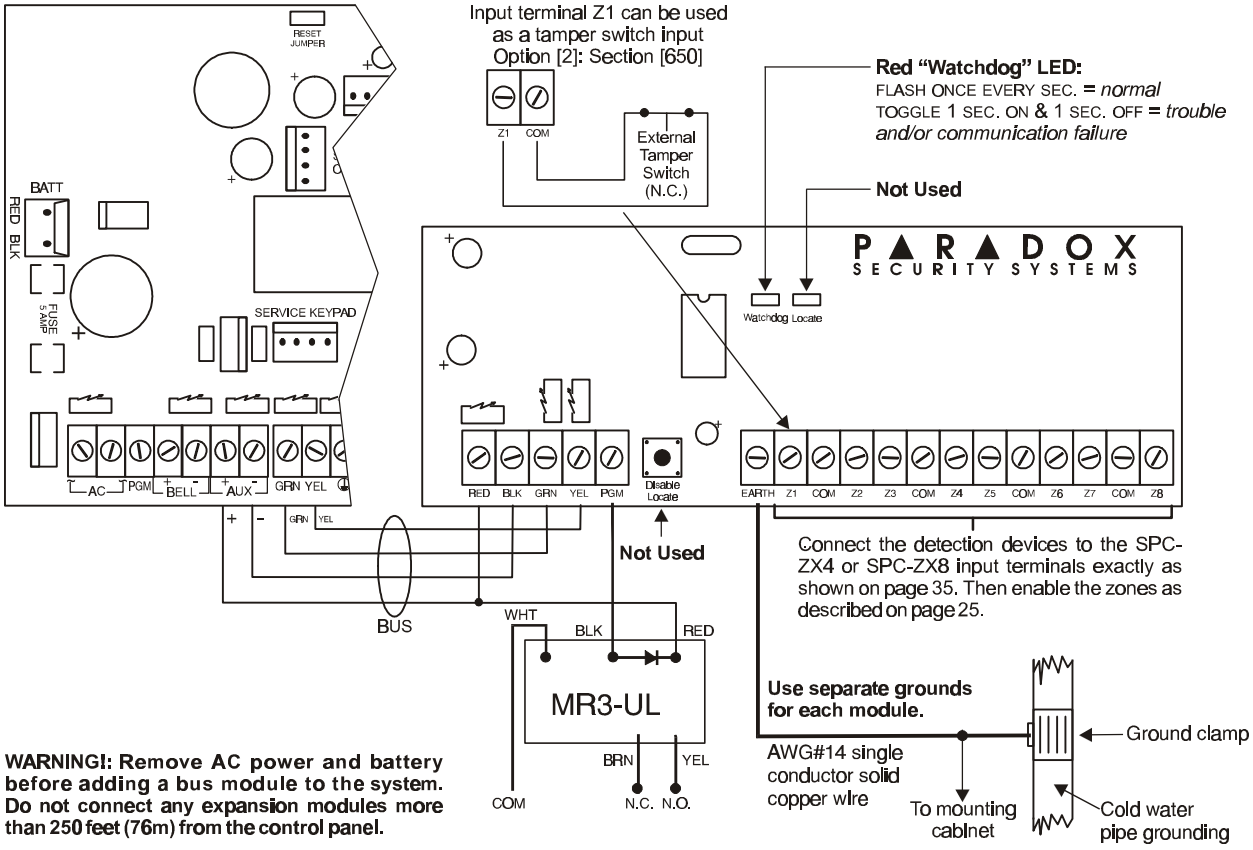

SPECTRA 1725, 1725EX, 1728 AND 1728EX PCB LAYOUT

Service Keypad

+ AUX - GRN YEL

Four pin connector can be used for quick installation of a Spectra keypad or Expansion Module.

Reset Jumper

Spectra Memory Key (see page 5 for details)

RESET JUMPER

KEY

SERIAL OUTPUT

STATUS

Status LED

FLASH ONCE EVERY SEC. = **normal**

TOGGLE ON 1SEC. / OFF 1SEC. = **trouble**

ALWAYS ON = **panel is using phone line**

FAST FLASH 4SEC. AFTER POWER UP = **Installer lock enabled**

BATT

RED BLK

RECHARGEABLE BATTERY

UL/ULC 12VDC / 4Ah

FUSE 5AMP

SERVICE KEYPAD

PARADOX SECURITY SYSTEMS

SPECTRA 1728X

Warning: Disconnect telephone line before servicing.

RJ31X CA 38A

Caution: Disconnect battery before replacing the fuse.

AC PGM BELL AUX GRN YEL 1 C 2 3 C 4 5 EARTH R-1 T-1 RING TIP

GRY BRN RED GRN

see page 36

Refer to the *Transformer Requirements* table below.

TRANSFORMER

A.C. POWER

Warning: Improper connection may result in damage to the system.

For Zone Input Connections refer to page 35 & 36.

These inputs are not available on the 1725 and 1725EX PCB.

AWG#14 single conductor solid copper wire

Cold water pipe grounding

Ground clamp

To provide maximum lightning protection we strongly recommend having separate earth connections for the dialer and zone ground terminals.

To mounting Cabinet

BELL OUTPUT

Will shut down if current exceeds 3A.

BELL

SIREN

UL/ULC Wheelock 46T-12

SPECTRA KEYPADS

The maximum number of keypads per installation is dependent on the auxiliary output, which is not to exceed 750mA or 1A (see below). Please refer to the current consumption table in the installation manual.

AUX POWER

Refer to transformer requirements below for Aux. Power Output. To connect additional wiring to auxiliary power, use the red (+) and black (-) keypad connectors. Auxiliary power will shut down if current exceeds 1.1A.

J1

J2

1686 LED Keypad

ZONE RED BLK GRN YEL

J1 - Zone Select Jumper

ON = Keypad zone 1 (see page 6)

OFF = Keypad zone 2 (see page 6)

J2 - EOL Jumper

ON = You must install EOL resistor on keypad zone.

OFF = Keypad zone uses on-board EOL resistor

A Door Contact or any other detection device can be connected to the Keypad Zone.

1KΩ EOL

only if J2 is on

Warning: Do not connect keypads more than 500 feet (152m) from the control panel.

YEL

GRN

BLK

RED

Transformer Requirements: *UL Listed Transformers*	16VAC 20VA *Amseco XP-1620*	16VAC 40VA *Amseco XP-1640*
Spectra DC Power Supply rated at:	1.2A	1.5A
Auxiliary Supply can provide: *For proper operation please ensure these limits are not exceeded.*	750mA	1A
Acceptable Battery Charge Currents: *For proper operation please respect these specifications.*	350mA	350mA/700mA

SPECTRA 1755, 1755EX, 1758 AND 1758EX PCB LAYOUT

Other than the location of the parts on the board and the items that have been indicated below, connections to these control panels are identical to those on page 38.

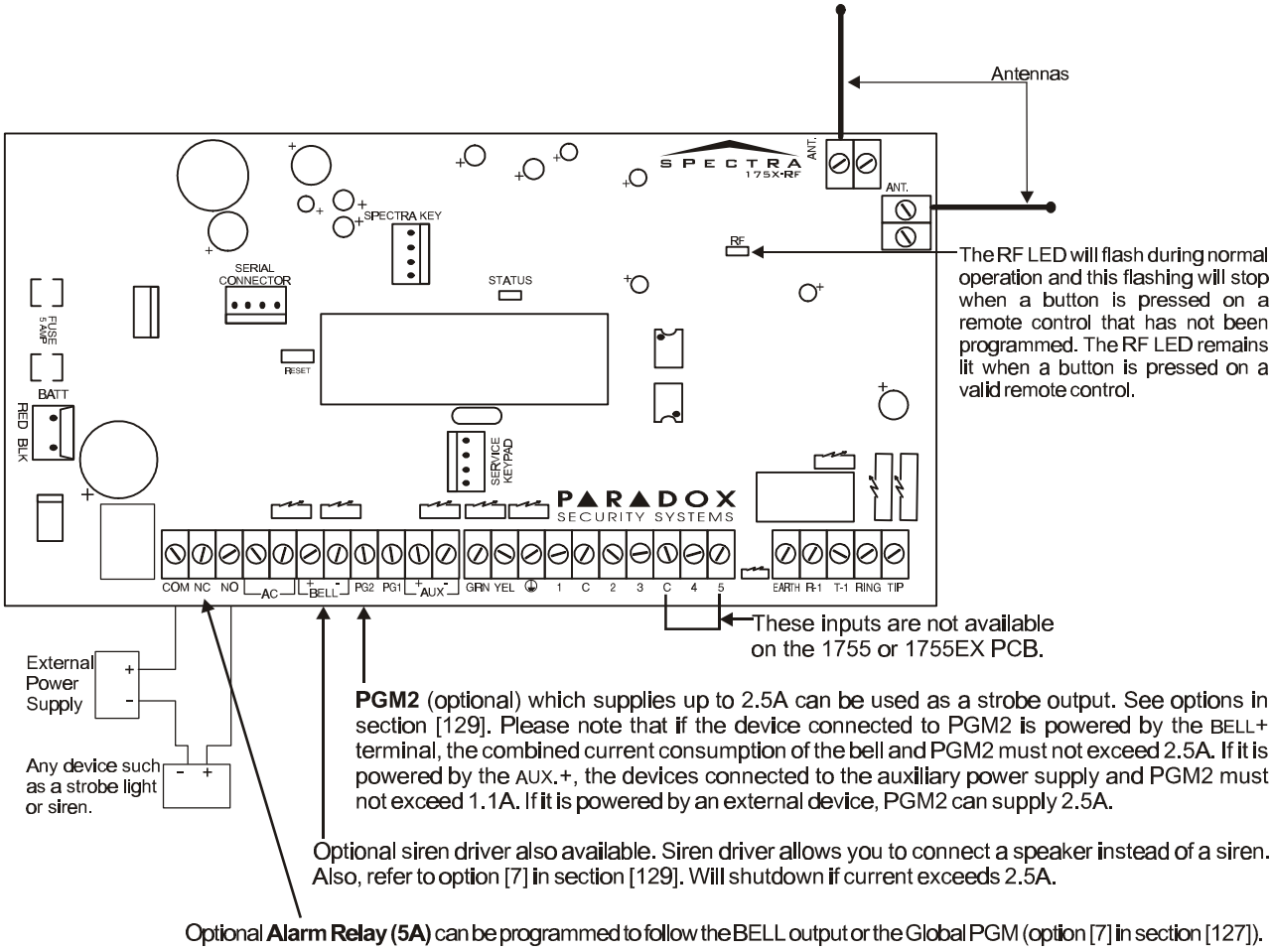

CONNECTING SPEAKERS TO THE BELL OUTPUT (Siren Driver Option Only)

An optional siren driver is available with the Spectra 1755, 1755EX, 1758 and 1758EX control panels. This siren driver allows you to connect speakers directly to the “bell” output as shown in the figure below. **Minimum speaker rating = 30 watts.**

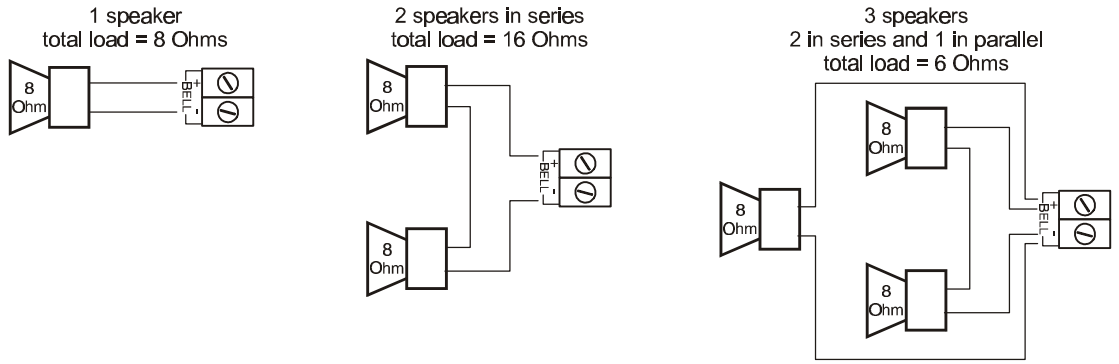

# of 8W speakers	Connection Type	Total Load	Average Current Draw*
1	-	8 Ohms	800mA
2	Series	16 Ohms	460mA
2	2 Series, 1 Parallel	6 Ohms	1.8A

NOTE: Other connection types can be used as long as the Bell Output does not exceed 2.5A.

P▲R▲DOX®
SECURITY SYSTEMS
780 Industrial Blvd., St-Eustache, Montreal, Quebec, Canada J7R 5V3
Fax: (450) 491-2313 **http://www.paradox.ca**

PRINTED IN CANADA - 09/99
SPECEP-03